SPECIALTY PRODUCTS

PRODUCT **PAGE**

INDEX **A-1**

MTO SPECIALTY PRODUCTS **A-2**

IDLER SPROCKETS . . . . . **A-3 – A-5**

BRONZE BUSHED A-3

BALL BEARING A-4

BALL BEARING – NON-METALLIC A-4

NEEDLE BEARING A-3

BRONZE BEARING A-3

CHAIN TIGHTENER A-5

800 SERIES CONVEYOR SPROCKETS . . . . . **A-6 – A-13**

QRS® SPLITS A-7

815 . . . . . A-8, A-11

820 . . . . . A-8, A-10

821 . . . . . A-9

880 . . . . . A-9

881 . . . . . A-9

882 . . . . . A-12

815 GUIDE RINGS A-12

SEMI-FINISHED WELD-ON HUBS A-13

CUSTOM CAPABILITIES . . . . . **A-14 – A-16**

FORGINGS A-14

SINTERED METAL A-16

CASTINGS A-17

INJECTION MOLDING PLASICS A-17

MILLED PLASTICS A-18

LASER A-19

WATERJET A-19

Made To Order
Specialty Products

SPLIT S820 SPROCKET

TAPER BUSHED
ADJUSTABLE HUB

SPECIAL BEARING
HOUSING

Martin Semi-Steel 800 Series Conveyor Sprockets
are Available for All your Flat Top Chain Needs.

The Most Complete Line of
Idler Sprockets.

Idler Sprockets

Bronze Bushed Type

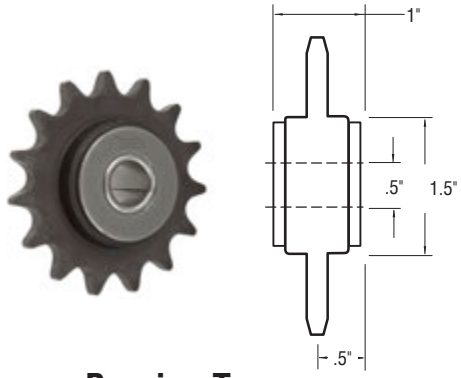

Bronze Bushed Idler Sprocket

No. Teeth	Catalog Number	Chain Size	O.D	Stock Bore	LTB without Bearing	Wt. Lbs.
20	31E20	35	2.6	.5	.75	.46
15	41E15	41-40	2.65	.5	.75	.5
15	51E15	50	3.32	.5	.75	.7
14	61E14	60-60H	3.74	.5	.75	.92

Above idlers have oil impregnated sintered bronze bearings and are mounted on steel journals. Idler RPM to 2500. Radial load rating to 50 pounds.

Bronze Bearing Type

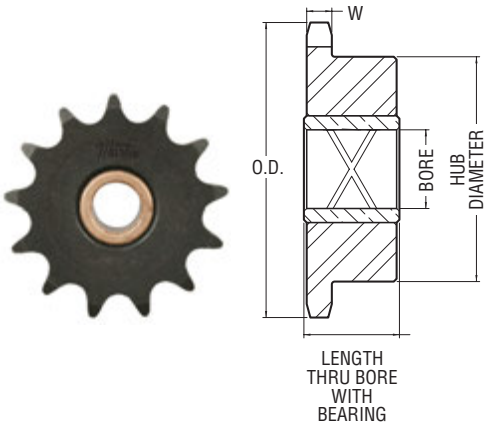

Bronze Bearing Idler Sprocket

No. Teeth	Catalog Number	Bearing Type	Chain Size	O.D	Stock Bore	LTB without Bearing	LTB with Bearing	W	Hub Dia.	Wt. Lbs.
5	35BR15 1/2	Bronze	35	1.99	.5	.75	.94	.168	1.35	.30
21	35BR21 7/8	Bronze	35	2.71	.875	.88	1.06	.168	2	.75
13	41BR13 1/2	Bronze	41	2.33	.5	.88	.94	.227	1.56	.50
19	41BR19 7/8	Bronze	41	3.29	.875	1	1.06	.227	2.5	1
13	40BR13 1/2	Bronze	40	2.33	.5	.88	.94	.284	1.56	.50
19	40BR19 7/8	Bronze	40	3.29	.875	1	1.06	.284	2.5	1.25
13	50BR13 1/2	Bronze	50	2.91	.5	.88	.94	.343	1.87	.90
17	50BR17 7/8	Bronze	50	3.72	.875	1	1.06	.343	2.62	1.50
15	60BR15 7/8	Bronze	60	3.98	.875	1	1.06	.459	2.62	1.75
17	60BR17 1 1/8	Bronze	60	4.46	1.125	1.25	1.56	.459	3.25	2.75
15	80BR15 1 1/8	Bronze	80	5.3	1.125	1.50	1.56	.575	3.5	4.25

.875" & 1.125" bore have double loop grease groove.

Radial Load Capacity in Pounds at Various Speeds Needle Bearings

Idler Size	RPM					
	100	500	1000	1500	2000	2500
.5 Bore	1021	630	512	453	416	389
1 Bore	2751	1698	1379	1221	1120	1048
1.5 Bore	6306	3891	3160	2798	2567	–

Ratings shown above are based on an average bearing life of 2500 hours.

Needle Bearing Type

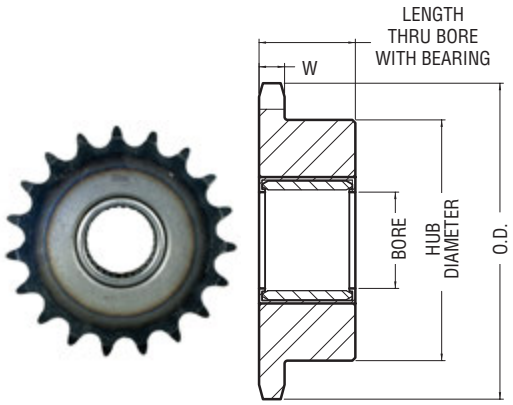

Needle Bearing Idler Sprocket

No. Teeth	Catalog Number	Bearing Type	Chain Size	O.D	Stock Bore	LTB without Bearing	LTB with Bearing	W	Hub Dia.	Wt. Lbs.
19	25NB19H 1/2	Needle	25	1.65	.5	.75	.75	.11	1.22	.1
13	35NB13H 1/2	Needle	35	1.75	.5	.75	.75	.168	1.18	.2
19	35NB19H 1	Needle	35	2.47	1	1	1	.168	1.84	.5
19	41NB19H 1	Needle	41	3.29	1	1	1	.227	2.5	1
19	40NB19H 1	Needle	40	3.29	1	1	1	.284	2.5	1.1
17	50NB17H 1	Needle	50	3.72	1	1	1	.343	2.25	1.3
17	60NB17H 1	Needle	60	4.46	1	1	1	.459	3	2.6
13	80NB13H 1	Needle	80	4.66	1	1.25	1.25	.575	2.63	2.9
11	100NB11H 1 1/2	Needle	100	5.01	1.5	1.88	1.88	.692	3.56	3.6
11	120NB11H 1 1/2	Needle	120	6.01	1.5	2.13	2.13	.924	3.56	7
11	140NB11H 1 1/2	Needle	140	7.01	1.5	2.25	2.25	.924	4.25	1.9
9	160NB9H 1 1/2	Needle	160	6.7	1.5	2.25	2.25	1.156	3.63	9.6

Idler Sprockets

Ball Bearing Idler Sprocket – Hardened Teeth

No. Teeth	Discontinued Part Number	Catalog Number	Bearing Type	Chain Size	O.D	Stock Bore	LTB without Bearing	LTB with Bearing	W	Wt. Lbs.
20		25BB20 3/8 *	Ball	25	1.73	.394	.11	.35	.11	.1
19		35BB19H 3/8	Ball	35	2.47	.394	.38	.38	.168	.35
19		35BB19H 1/2	Ball	35	2.47	.51	.48	.72	.168	.35
20	35BB20H	35BB20H 5/8	Ball	35	2.59	.638	.48	.72	.168	.38
18		41BB18H 1/2	Ball	41	3.14	.51	.48	.72	.227	.51
18		41BB18H 5/8	Ball	41	3.14	.638	.48	.72	.227	.51
17	40BB17H	40BB17H 5/8	Ball	40	2.97	.638	.48	.72	.284	.52
18		40BB18H 1/2	Ball	40	3.14	.51	.48	.72	.284	.53
18	40BB18H	40BB18H 5/8	Ball	40	3.14	.638	.48	.72	.284	.53
25		40BB25H 5/8	Ball	40	4.26	.638	.48	.72	.284	.9
35		40BB35H 5/8	Ball	40	5.86	.638	.48	.72	.284	1.77
48		40BB48H 5/8	Ball	40	7.93	.638	.22	.72	.284	3.37
15	50BB15H	50BB15H 5/8	Ball	50	3.32	.638	.48	.72	.343	.75
17		50BB17H 1/2	Ball	50	3.72	.51	.48	.72	.343	.78
17	50BB17H	50BB17H 5/8	Ball	50	3.72	.638	.48	.72	.343	.78
25		50BB25H 3/4	Ball	50	5.32	.75	.59	.61	.343	1.66
39		50BB39H 3/4	Ball	50	8.12	.75	.32	.61	.343	4.09
12		60BB12H 5/8	Ball	60	3.25	.638	.48	.72	.459	.72
13	60BB13H	60BB13H 5/8	Ball	60	3.49	.638	.48	.72	.459	.76
15		60BB15H 1/2	Ball	60	3.98	.51	.48	.72	.459	1.06
15	60BB15H	60BB15H 5/8	Ball	60	3.98	.638	.48	.72	.459	1.06
17		60BB17H 5/8	Ball	60	4.46	.638	.48	.72	.459	1.1
12	80BB12H	80BB12H 3/4	Ball	80	4.33	.75	.59	.61	.575	1.5

Note: .394 Stock Bore is +.000 .0003; .510 Stock Bore is +.005 .000; .638 Stock Bore is +.005 .000; .750 Stock Bore is +.005 .000. Discontinued Part Numbers will be replaced with Catalog Number when existing inventory is exhausted.

* Unhardened Teeth

Ball Bearing Type

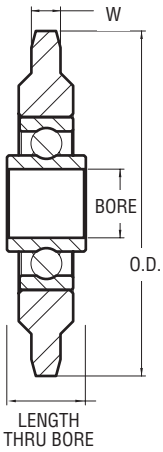

Ball Bearing Idler Sprockets – Non Metallic Teeth

No. Teeth	Catalog Number	Bearing Type	Chain Size	O.D	Stock Bore	LTB without Bearing	LTB with Bearing	W	Wt. Lbs.
17	40BB17NM 1/2	Ball	40	2.97	.510	0.72	.72	.284	.24
18	40BB18NM 5/8	Ball	40	3.14	.638	0.72	.72	.284	.23
17	50BB17NM 1/2	Ball	50	3.72	.510	0.72	.72	.343	.29
18	50BB18NM 5/8	Ball	50	3.92	.638	0.72	.72	.343	.29
15	60BB15NM 1/2	Ball	60	3.98	.510	0.72	.72	.459	.32
16	60BB16NM 5/8	Ball	60	4.22	.638	0.72	.72	.459	.33
12	80BB12NM 3/4	Ball	80	4.33	.750	0.96	.61	.575	.44

Note: .510 Stock Bore is +.005 .000; .638 Stock Bore Is +.005 .000;
.750 Stock Bore Is +.005 .000

Non-Metallic Teeth Ball Bearing Type

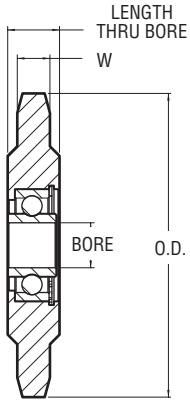

Radial Load Capacity in Pounds at Various Speeds Ball Bearings

Idler Size	RPM					
	100	500	1000	1500	2000	2500
.375" Bore	620	363	288	252	229	212
.5" & .625" Bore	800	460	360	320	290	270
.75" Bore	1290	755	600	523	478	440

Ratings shown above are based on an average bearing life of 2500 hours.

Idler Sprockets

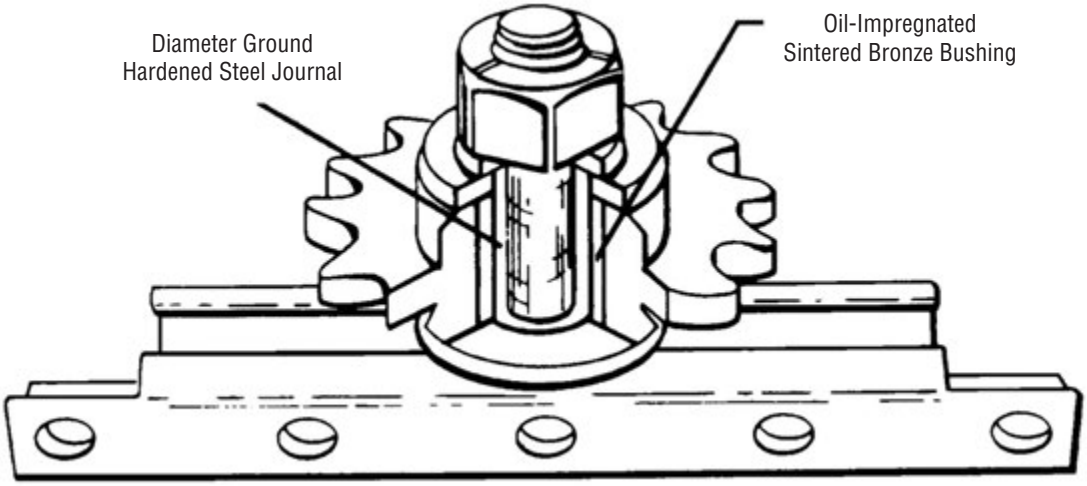

Chain Tightener
(Less Idler Sprocket)

No. E-5006

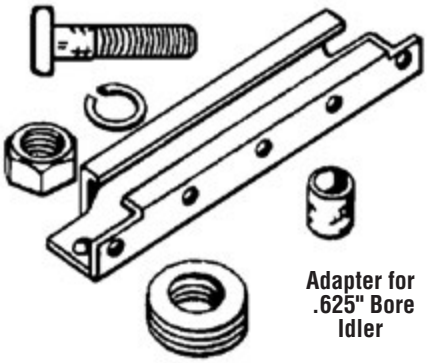

Adapter for .625" Bore Idler

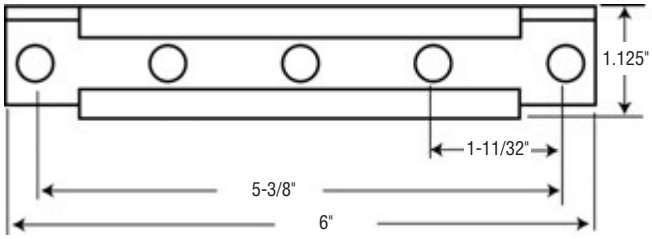

Attachment Bolts Not Furnished

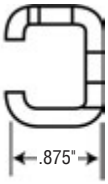

Attachments Holes for 5/16" Bolts

Martin Chain Tighteners are economical to use . . . they provide everything needed for a quick, easy installation . . . they save time and money . . . there is no need to design, procure or custom make and assemble separate parts . . . they accommodate mounting in several different positions . . . parallel or at 90° to the mounting surface . . . as cantilever or attached each end.

Features of Martin Idlers

Smooth-running, oil-impregnated, sintered bronze, extra-duty bearing press-fitted in sprocket. Steel journal case hardened . . . for maximum resistance to wear . . . diameter ground surface for free running under load.

Steel sprockets used in Martin Idlers . . . are accurately machined (not stamped) the same as sprockets normally supplied for power transmission use.

Martin Series 800 Conveyor Sprockets Manufactured From High Quality Semi-Steel

**815 Solid Face
with Guide Ring Holes
for Straight Running Chains**

**THE NEW
"QRS®"
SPLIT**

PAT. # 4,964,842

**Split
81.62520 Solid and Grooved Face
with Guide Ring Holes
Steel and Thermoplastic**

**820 Grooved Face for
Straight Running Chain**

**821 Heavy Duty
for Wide Hinged Chain
Straight Running**

**880 and 882 Single Duty
for Side Flex Chains**

881 for Side Flex Chain

815, 820, and 881 sprockets are all double duty. Sprockets with an odd number of teeth are recommended to reduce wear since a given tooth engages the chain every other revolution. Sprockets with 19, 21, 23, and 25 teeth are preferred. Sprockets with even number of teeth should be advanced one tooth periodically to attain even wear.

Martin "QRS®" Split Sprocket

Series 81.62520 Split Sprockets for Flat Top Conveyor Chains

Split Sprockets Manufactured
from Steel and Thermoplastic Material
Stocked in 21, 23, 25, and 27 Tooth Sizes

Martin's **Q**uick **R**eplacement **S**plit Sprocket eliminates the time-consuming and costly dismounting of shafts and pillow blocks to remove worn sprockets — all that's required is a wrench

"QRS" Split Thermoplastic Sprocket Advantages:
Lightweight — Service Temp. to 300°F — Low Temp. Toughness — Excellent Resistance to Oils, Grease, Soaps, and Detergents — Outstanding Abrasion and Impact Resistance

Available with solid and grooved face
and furnished with rust resistant plated steel bolts and nuts

Split (plated carbon steel and stainless) Guide Rings
available, if necessary, for easy assembly

Proudly made in U.S.A.

PAT. # 4,964,842

Call your Martin Distributor

Split Steel and Thermoplastic Stock Bore

Series 815 Sprockets — Split Steel

Catalog Number	No. Teeth		Pitch Diameter †	Outside Diameter †	Bore †		Weight ††
	Actual	Effective			Stock	Maximum	
QRS815A21	21	10.5	5.089 (129.26)	5.12 (130.0)	.75 (19.1)	1.5 (38.1)	5.0 (2.27)
QRS815A23	23	11.5	5.560 (141.22)	5.59 (142.0)	.75 (19.1)	1.5 (38.1)	5.6 (2.54)
QRS815A25	25	12.5	6.032 (153.21)	6.07 (154.2)	.75 (19.1)	1.5 (38.1)	6.6 (3.0)
QRS815A27	27	13.5	6.504 (165.20)	6.56 (166.6)	.75 (19.1)	1.5 (38.1)	7.8 (3.54)

Supplied with 5/16 -18 standard setscrew @ 90° to split.
† Inches (mm)
†† Lbs (kg)

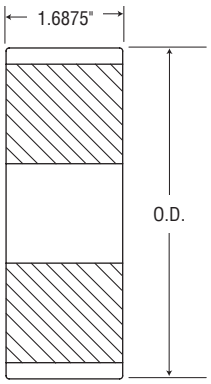

Solid Face

Series 815 Sprockets — Split Thermoplastic

Catalog Number	No. Teeth		Pitch Diameter †	Outside Diameter †	Bore †		Weight ††
	Actual	Effective			Stock	Maximum	
QRS815A21P	21	10.5	5.089 (129.26)	5.12 (130.0)	.75 (19.1)	1.5 (38.1)	.94 (.43)
QRS815A23P	23	11.5	5.560 (141.22)	5.59 (142.0)	.75 (19.1)	1.5 (38.1)	1.00 (.45)
QRS815A25P	25	12.5	6.032 (153.21)	6.07 (154.2)	.75 (19.1)	1.5 (38.1)	1.10 (.50)
QRS815A27P	27	13.5	6.504 (165.20)	6.56 (166.6)	.75 (19.1)	1.5 (38.1)	1.25 (.57)

Thermoplastic temperature operating range –20°F to +300°F

Supplied with 5/16 -18 standard setscrew @ 90° to split.
† Inches (mm)
†† Lbs (kg)

Series 820 Sprockets — Split Steel

Catalog Number	No. Teeth		Pitch Diameter †	Outside Diameter †	Bore †		Weight ††
	Actual	Effective			Stock	Maximum	
QRS820A21	21	10.5	5.089 (129.26)	5.12 (130.0)	.75 (19.1)	1.5 (38.1)	5.0 (2.27)
QRS820A23	23	11.5	5.560 (141.22)	5.59 (142.0)	.75 (19.1)	1.5 (38.1)	5.6 (2.54)
QRS820A25	25	12.5	6.032 (153.21)	6.07 (154.2)	.75 (19.1)	1.5 (38.1)	6.6 (3.0)
QRS820A27	27	13.5	6.504 (165.20)	6.56 (166.6)	.75 (19.1)	1.5 (38.1)	7.8 (3.54)

Supplied with 5/16-18 standard setscrew @ 90° to split.
† Inches (mm)
†† Lbs (kg)

PAT. # 4,964,842

Series 820 Sprockets — Split Thermoplastic

Catalog Number	No. Teeth		Pitch Diameter †	Outside Diameter †	Bore †		Weight ††
	Actual	Effective			Stock	Maximum	
QRS820A21P	21	10.5	5.089 (129.26)	5.12 (130.0)	.75 (19.1)	1.5 (38.1)	.94 (.43)
QRS820A23P	23	11.5	5.560 (141.22)	5.59 (142.0)	.75 (19.1)	1.5 (38.1)	1.00 (.45)
QRS820A25P	25	12.5	6.032 (153.21)	6.07 (154.2)	.75 (19.1)	1.5 (38.1)	1.10 (.50)
QRS820A27P	27	13.5	6.504 (165.20)	6.56 (166.6)	.75 (19.1)	1.5 (38.1)	1.25 (.57)

Thermoplastic temperature operating range –20°F to +300°F

Supplied with 5/16 -18 standard setscrew @ 90° to split.
† Inches (mm)
†† Lbs (kg)

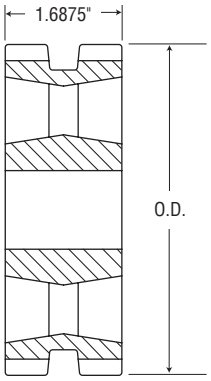

Grooved Face

For Guide Ring Specifications See page A-12.

Series 821 Sprockets — Semi-Steel — Stock Bore

Catalog Number	No. Teeth		Pitch Diameter †	Outside Diameter †	Bore †		Weight ††
	Actual	Effective			Stock	Maximum	
821A21	21	10.5	5.089 (129.26)	5.12 (130.0)	1 (25.4)	1.75 (44.5)	6.7 (3.0)
821A23	23	11.5	5.560 (141.22)	5.59 (142.0)	1 (25.4)	1.75 (44.5)	7 (3.2)
821A25	25	12.5	6.032 (153.21)	6.07 (154.2)	1 (25.4)	1.75 (44.5)	7.3 (3.3)
821A27	27	13.5	6.504 (165.20)	6.56 (166.6)	1 (25.4)	1.75 (44.5)	7.6 (3.4)
821A29	29	14.5	6.978 (177.24)	7.05 (179.1)	1 (25.4)	1.75 (44.5)	8.0 (3.6)

† Inches (mm)
†† Lbs (kg)
821 Series also runs with 815 H chain.

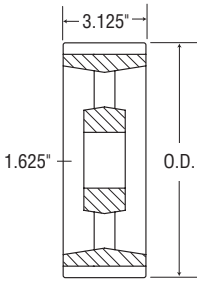

Series 880 Sprockets — Semi-Steel — Stock Bore

Catalog Number	No. Teeth		Pitch Diameter †	Outside Diameter †	Bore †		Weight ††
	Actual	Effective			Stock	Maximum	
880C9 •	9	9	4.386 (111.40)	4.33 (110.0)	.75 (19.1)	1.75 (44.5)	2.8 (1.3)
880C10	10	10	4.854 (123.29)	4.82 (122.4)	.75 (19.1)	1.75 (44.5)	3.2 (1.4)
880C11	11	11	5.324 (135.22)	5.31 (134.9)	.75 (19.1)	1.75 (44.5)	3.4 (1.5)
880C12	12	12	5.796 (147.22)	5.80 (147.3)	.75 (19.1)	1.75 (44.5)	3.6 (1.6)
880C15	15	15	7.215 (182.26)	7.26 (184.4)	.75 (19.1)	1.75 (44.5)	4.2 (1.9)

• Block Body – Other sizes are arm body.
† Inches (mm)
†† Lbs (kg)

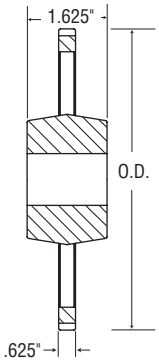

Series 881 Sprockets — Semi-Steel — Stock Bore

Catalog Number	No. Teeth		Pitch Diameter †	Outside Diameter †	Bore †		Weight ††
	Actual	Effective			Stock	Maximum	
881C21	21	10.5	5.089 (129.26)	5.120 (130.05)	.75 (19.1)	1.75 (44.5)	4.2 (1.9)
881C23	23	11.5	5.560 (141.22)	5.590 (141.99)	.75 (19.1)	1.75 (44.5)	4.6 (2.1)
881C25	25	12.5	6.032 (153.21)	6.070 (154.18)	.75 (19.1)	1.75 (44.5)	5.0 (2.3)

† Inches (mm)
†† Lbs (kg)

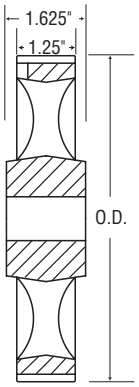

800 Series
Conveyor Sprockets

Series 820 Sprockets — Semi-Steel — Stock Bore

Catalog Number	No. Teeth		Pitch Diameter †	Outside Diameter †	Bore †		Weight ††
	Actual	Effective			Stock	Maximum	
820A13B •	13	6.5	3.228 (81.99)	3.11 (79.0)	.75 (19.1)	1.25 (31.8)	2.4 (1.1)
820A15B •	15	7.5	3.688 (93.68)	3.63 (92.2)	.75 (19.1)	1.25 (31.8)	3.6 (1.6)
820A17B •	17	8.5	4.153 (105.49)	4.12 (104.7)	.75 (19.1)	1.6875 (42.9)	4.7 (2.1)
820A19	19	9.5	4.620 (117.35)	4.61 (117.1)	.75 (19.1)	1.25 (31.8)	3.1 (1.5)
820A20	20	10	4.854 (123.29)	4.86 (123.4)	.75 (19.1)	1.25 (31.8)	3.8 (1.7)
820A21	21	10.5	5.089 (129.26)	5.12 (130.0)	.75 (19.1)	1.75 (44.5)	4.6 (2.1)
820A21B •	21	10.5	5.089 (129.26)	5.12 (130.0)	.75 (19.1)	2.5 (63.5)	7.1 (3.3)
820A22	22	11	5.324 (135.23)	5.35 (135.9)	.75 (19.1)	1.75 (44.5)	4.2 (1.9)
820A23	23	11.5	5.560 (141.22)	5.59 (142.0)	.75 (19.1)	1.75 (44.5)	5.3 (2.4)
820A24	24	12	5.796 (147.22)	5.83 (148.1)	.75 (19.1)	1.75 (44.5)	4.4 (2.0)
820A25	25	12.5	6.032 (153.21)	6.07 (154.2)	.75 (19.1)	2 (50.8)	5.6 (2.4)
820A25B •	25	12.5	6.032 (153.21)	6.07 (154.2)	.75 (19.1)	3-3/16 (81.0)	9.6 (4.4)
820A27	27	13.5	6.504 (165.20)	6.56 (166.6)	.75 (19.1)	2 (50.8)	6.5 (2.8)
820A29	29	14.5	6.978 (177.24)	7.05 (179.1)	.75 (19.1)	2 (50.8)	6.8 (3.1)
820A31	31	15.5	7.452 (189.28)	7.53 (191.3)	.75 (19.1)	2 (50.8)	6.9 (3.1)
820A41	41	20.5	9.826 (249.58)	9.93 (252.2)	.75 (19.1)	2.5 (64)	16.00 (7.1)

• Block Body — Other sizes are arm body.
† Inches (mm)
†† Lbs (kg)
Max. bore shown is with Standard Keyway and Setscrew.
820 Series stocked grooved. (Guide ring holes in 21, 23, 25, and 27 tooth sizes can be provided upon request).

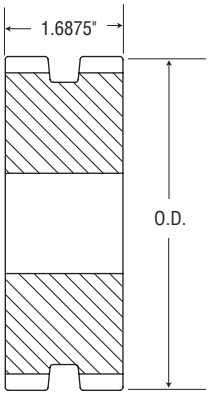

Steel

Series 820 Sprockets — Semi-Steel — Bored-to-Size

Catalog Number	Inch/Metric Stock Finished Bores With Standard Keyway and Setscrew				
820BS19		1" (25.4)			
820BS21		1" (25.4)			
820BS23	.875" (22.2)	1" (25.4)	1.125" (28.6)	1.187" (30.2)	1.25" (31.8)
820BS25		1" (25.4)		1.187" (30.2)	1.25" (31.8)
820BS27		1" (25.4)			

Stock grooved without guide ring holes. All arm body.

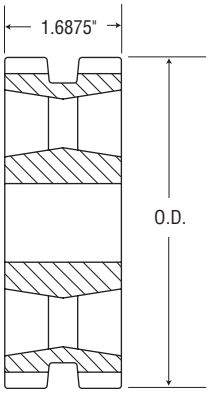

Cast

800 Series Conveyor Sprockets

Series 815 Sprockets — Semi-Steel — Stock Bore

Catalog Number	No. Teeth		Pitch Diameter †	Outside Diameter †	Bore †		Weight ††
	Actual	Effective			Stock	Maximum	
815A13B •	13	6.5	3.228 (81.99)	3.11 (79.0)	.75 (19.1)	1.25 (31.8)	2.4 (1.1)
815A15B •	15	7.5	3.688 (93.68)	3.63 (92.2)	.75 (19.1)	1.25 (31.8)	3.6 (1.6)
815A17B •	17	8.5	4.153 (105.49)	4.12 (104.7)	.75 (19.1)	111/16 (42.9)	4.7 (2.1)
815A19	19	9.5	4.620 (117.35)	4.61 (117.1)	.75 (19.1)	1.25 (31.8)	3.1 (1.5)
815A20	20	10	4.854 (123.29)	4.86 (123.4)	.75 (19.1)	1.25 (31.8)	3.8 (1.7)
815A21	21	10.5	5.089 (129.26)	5.12 (130.0)	.75 (19.1)	1.75 (44.5)	4.6 (2.1)
815A21B •	21	10.5	5.089 (129.26)	5.12 (130.0)	.75 (19.1)	2.5 (63.5)	7.1 (3.3)
815A22	22	11	5.324 (135.23)	5.35 (135.9)	.75 (19.1)	1.75 (44.5)	4.2 (1.9)
815A23	23	11.5	5.560 (141.22)	5.59 (142.0)	.75 (19.1)	1.75 (44.5)	5.3 (2.4)
815A24	24	12	5.796 (147.22)	5.83 (148.1)	.75 (19.1)	1.75 (44.5)	4.4 (2.0)
815A25	25	12.5	6.032 (153.21)	6.07 (154.2)	.75 (19.1)	2 (50.8)	5.6 (2.4)
815A25B •	25	12.5	6.032 (153.21)	6.07 (154.2)	.75 (19.1)	3-3/16 (81.0)	9.6 (4.4)
815A27	27	13.5	6.504 (165.20)	6.56 (166.6)	.75 (19.1)	2 (50.8)	6.5 (2.8)
815A29	29	14.5	6.978 (177.24)	7.05 (179.1)	.75 (19.1)	2 (50.8)	6.8 (3.1)
815A31	31	15.5	7.452 (189.28)	7.53 (191.3)	.75 (19.1)	2 (50.8)	6.9 (3.1)
815A41	41	20.5	9.826 (249.58)	9.93 (252.2)	.75 (19.1)	2.5 (64)	16.00 (7.1)

• Block Body — Other sizes are arm body.
† Inches (mm)
†† Lbs (kg)
Max. bore shown is with Standard Keyway and Setscrew.
815 Series stocked not grooved, with guide ring holes.

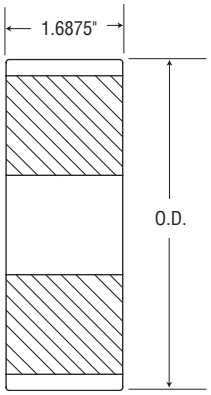

Steel

Series 815 Sprockets — Semi-Steel — Bored-to-Size

Catalog Number	Inch/Metric Stock Finished Bores With Standard Keyway and Setscrew				
815BS19		1" (25.4)			
815BS21		1" (25.4)			
815BS23	.875" (22.2)	1" (25.4)	1.125" (28.6)	1.187" (30.2)	1.25" (31.8)
815BS25		1" (25.4)		1.187" (30.2)	1.25" (31.8)
815BS27		1" (25.4)			

Stock grooved without guide ring holes. All arm body.

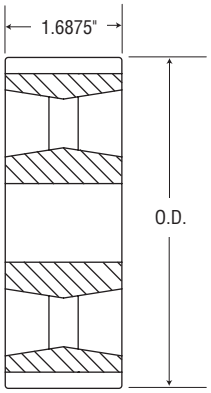

Cast

Series 800
Conveyor Sprockets

Series 822 Sprockets — Stock Bore

Catalog Number	No. Teeth		Pitch Diameter †	Outside Diameter †	Bore †		Weight ††
	Actual	Effective			Stock	Maximum	
882C9	9	9	4.386 (111.40)	4.430 (112.5)	.75 (19.1)	1.75 (44.5)	3.8 (1.8)
882C10	10	10	4.854 (123.29)	4.920 (125.0)	.75 (19.1)	1.75 (44.5)	4.2 (1.9)
882C11	11	11	5.325 (135.25)	5.410 (137.40)	.75 (19.1)	1.75 (44.5)	4.4 (2.1)
882C12 •	12	12	5.796 (147.21)	5.90 (149.90)	.75 (19.1)	1.75 (44.5)	4.6 (2.2)

• Arm Body — Other sizes are block body.
† Inches (mm)
†† Lbs (kg)

815 Guide Rings — Steel and Stainless Steel

Catalog Number ★	O.D.†	Thick †	Weight †† Per Set
GR15-16	3.62	1/16	.23
GR15-16SS	(91.9)	(1.6)	(.10)
GR17-18	4.11	1/16	.26
GR17-18SS	(104.4)	(1.6)	(.120)
GR19-20	4.58	1/8	.37
GR19-20SS	(116.3)	(3.2)	(.17)
GR21-22	5.09	1/8	.44
GR21-22SS	(129.3)	(3.2)	(.20)
GR23-24	5.56	1/8	.46
GR23-24SS	(141.2)	(3.2)	(.21)
GR25-26	6.04	1/8	.47
GR25-26SS	(153.4)	(3.2)	(.21)
GR27-28	6.53	1/8	.53
GR27-28SS	(165.9)	(3.2)	(.24)
GR29-30	7.02	1/8	.56
GR29-30SS	(178.3)	(3.2)	(.25)
GR31-32	7.50	1/8	.67
GR31-32SS	(190.5)	(3.2)	(.30)
GR41-42	9.89	1/8	.92
GR41-42SS	(251.2)	(3.2)	(.42)

★ Carbon Steel
Stainless Steel
† Inches (mm)
†† Lbs (kg)

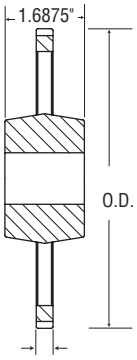

Semi-Finished Weld-On Hubs

Stock Semi-Finished Weld-On Hubs

Catalog Number	Dimensions			Approx. Wt. Lbs.
	Outside Diameter	Length	Inside Diameter	
225-28-19	2.25	.875	.594	.9
225-28-23	2.25	.875	.719	.9
225-32-00	2.25	1	—	1.1
250-30-00	2.5	.938	—	1.3
250-40-00	2.5	1.25	—	1.7
300-25-19	3	.719	.594	1.2
300-30-23	3	.938	.719	1.6
300-30-30	3	.938	.938	1.6
300-32-00	3	1	—	2.0
300-38-00	3	1.187	—	2.4
300-40-30	3	1.25	.938	2.3
325-25-19	3.25	.719	.594	1.8
325-30-23	3.25	.938	.719	2.1
350-30-00	3.5	.938	—	2.6
350-34-00	3.5	1.063	—	2.9
350-38-00	3.5	1.187	—	3.2
356-28-23	3.563	.875	.719	2.4
356-28-30	3.563	.875	.938	2.3
356-31-23	3.563	.969	.719	2.6
375-30-00	3.75	.938	—	2.9
375-30-30	3.75	.938	.938	2.8
375-45-30	3.75	1.406	.938	4.1
400-26-00	4	.813	—	2.9
400-26-23	4	.813	.719	2.8
400-26-30	4	.813	.938	2.7
400-31-30	4	.989	.938	3.3
400-32-23	4	1	.719	3.5
400-36-00	4	1.125	—	3.5
400-48-30	4	1.5	.938	5.1
425-26-00	4.25	.813	—	3.3
425-26-30	4.25	.813	.938	3.1
425-30-30	4.25	.938	.938	3.6
425-38-30	4.25	1.187	.938	4.5
425-42-40	4.25	1.313	1.25	4.8
425-45-30	4.25	1.406	.938	5.4
425-50-40	4.25	1.563	1.25	5.7
450-34-00	4.5	1.063	—	4.8
450-36-40	4.5	1.125	1.25	4.7
450-44-40	4.5	1.375	1.25	5.7
450-44-48	4.5	1.375	1.5	5.7
450-48-48	4.5	1.5	1.5	6.0
475-12-40	4.75	.375	1.25	1.8
475-22-30	4.75	.688	.938	3.3
475-22-40	4.75	.688	1.25	3.3
475-26-40	4.75	.813	1.25	4.0
475-30-30	4.75	.938	.938	4.5
475-36-00	4.75	1.125	—	5.7
475-36-30	4.75	1.125	.938	5.5
475-44-48	4.75	1.375	1.5	6.2
475-48-38	4.75	1.5	1.187	7.0
475-48-40	4.75	1.5	1.25	7.0
475-50-00	4.75	1.563	—	7.8
475-50-40	4.75	1.563	1.25	7.8
475-54-00	4.75	1.688	—	8.5
500-42-40	5	1.313	1.25	6.8
500-50-00	5	1.563	—	8.7
500-50-40	5	1.563	1.25	8.7
500-58-40	5	1.813	1.25	9.5
500-58-48	5	1.813	1.5	9.4
525-24-32	5.25	.75	1	4.4
525-34-00	5.25	1.063	—	6.5
525-36-40	5.25	1.125	1.25	6.5
525-42-00	5.25	1.313	—	8.1
525-48-40	5.25	1.5	1.25	8.7
525-48-48	5.25	1.5	1.5	8.7
525-62-32	5.25	1.938	1	11.5
525-72-32	5.25	2.25	1	13.3
550-34-00	5.5	1.063	—	7.2
550-44-40	5.5	1.375	1.25	8.6
550-44-48	5.5	1.375	1.5	8.6

Catalog Number	Dimensions			Approx. Wt. Lbs.
	Outside Diameter	Length	Inside Diameter	
550-48-40	5.5	1.5	1.25	9.3
550-48-48	5.5	1.5	1.5	9.3
550-58-40	5.5	1.813	1.25	11.6
550-58-48	5.5	1.813	1.5	11.6
550-64-48	5.5	2	1.5	12.5
575-24-32	5.75	.75	1	5.4
575-32-00	5.75	1	—	7.4
575-42-00	5.75	1.313	—	9.7
575-42-48	5.75	1.313	1.5	9.7
575-44-36	5.75	1.375	1.125	10.9
575-52-00	5.75	1.625	—	12.0
575-52-48	5.75	1.625	1.5	12.0
575-72-32	5.75	2.25	1	16.1
600-41-48	6	1.281	1.5	9.6
600-46-48	6	1.438	1.5	10.8
600-52-48	6	1.625	1.5	12.2
600-58-48	6	1.813	1.5	13.6
600-62-00	6	1.938	—	15.5
600-62-40	6	1.938	1.25	15.5
600-62-48	6	1.938	1.5	15.5
600-68-48	6	2.125	1.5	16.0
600-80-48	6	2.5	1.5	18.8
625-16-40	6.25	.5	1.25	4.4
625-16-48	6.25	.5	1.5	4.4
625-24-32	6.25	.75	1	6.4
625-24-40	6.25	.75	1.25	6.4
625-24-48	6.25	.75	1.5	6.4
625-28-48	6.25	.875	1.5	7.2
625-30-48	6.25	.938	1.5	8.1
625-32-40	6.25	1	1.25	8.3
625-34-48	6.25	1.063	1.5	9.3
625-38-40	6.25	1.187	1.25	10.0
625-38-48	6.25	1.187	1.5	9.7
625-48-48	6.25	1.5	1.5	12.3
625-52-48	6.25	1.625	1.5	13.3
625-68-48	6.25	2.125	1.5	17.4
625-80-32	6.25	2.5	1	21.1
650-44-00	6.5	1.375	—	12.9
650-44-48	6.5	1.375	1.5	12.9
650-52-48	6.5	1.625	1.5	14.5
650-72-48	6.5	2.25	1.5	20.0
650-96-48	6.5	3	1.5	26.7
675-36-40	6.75	1.125	1.25	11.0
675-38-48	6.75	1.187	1.5	11.4
675-44-48	6.75	1.375	1.5	13.3
675-61-48	6.75	1.906	1.5	19.4
675-72-48	6.75	2.25	1.5	21.7
675-94-40	6.75	2.938	1.25	28.3
700-24-48	7	.75	1.5	8.2
700-26-48	7	.813	1.5	8.9
700-28-48	7	.875	1.5	8.9
700-30-48	7	.938	1.5	9.2
700-32-48	7	1	1.5	9.8
700-36-48	7	1.125	1.5	12.3
700-38-48	7	1.187	1.5	13.0
700-44-48	7	1.375	1.5	14.3
700-52-48	7	1.625	1.5	16.9
700-58-48	7	1.813	1.5	18.9
700-61-48	7	1.906	1.5	19.8
700-62-48	7	1.938	1.5	21.1
700-68-48	7	2.125	1.5	22.1
700-112-48	7	3.5	1.5	36.4
725-36-40	7.25	1.125	1.25	12.8
725-94-40	7.25	2.938	1.25	33.3
750-24-48	7.5	.75	1.5	9.0
750-44-48	7.5	1.375	1.5	16.5
750-50-48	7.5	1.563	1.5	18.8
750-58-48	7.5	1.813	1.5	21.8
750-66-48	7.5	2.063	1.5	24.8
750-68-48	7.5	2.125	1.5	25.5

Catalog Number	Dimensions			Approx. Wt. Lbs.
	Outside Diameter	Length	Inside Diameter	
750-70-48	7.5	2.188	1.5	26.3
750-72-48	7.5	2.25	1.5	27.0
750-74-48	7.5	2.313	1.5	28.0
750-84-48	7.5	2.625	1.5	31.5
750-94-48	7.5	2.938	1.5	35.0
775-36-48	7.75	1.125	1.5	23.0
775-58-48	7.75	1.813	1.5	25.0
775-66-48	7.75	2.063	1.5	26.0
775-74-48	7.75	2.313	1.5	31.0
775-94-48	7.75	2.938	1.5	36.0
800-54-48	8	1.688	1.5	23.2
800-62-48	8	1.938	1.5	26.6
800-72-48	8	2.25	1.5	30.9
800-78-48	8	2.438	1.5	33.5
800-112-48	8	3.5	1.5	48.1
850-50-48	8.5	1.563	1.5	24.3
850-52-48	8.5	1.625	1.5	24.3
850-72-48	8.5	2.25	1.5	35.0
850-84-48	8.5	2.625	1.5	40.8
850-124-48	8.5	3.875	1.5	50.0
900-58-48	9	1.813	1.5	32.0
900-60-48	9	1.875	1.5	32.9
900-72-48	9	2.25	1.5	39.4
900-112-48	9	3.5	1.5	61.3
950-52-188	9.5	1.625	5.875	20.2
950-54-48	9.5	1.688	1.5	33.1
950-60-188	9.5	1.875	5.875	23.3
950-60-48	9.5	1.875	1.5	36.8
950-66-48	9.5	2.063	1.5	40.4
950-70-188	9.5	2.219	5.875	27.5
950-70-48	9.5	2.188	1.5	44.0
950-74-188	9.5	2.313	5.875	28.7
950-74-48	9.5	2.313	1.5	45.3
950-78-188	9.5	2.438	5.875	30.3
950-78-48	9.5	2.438	1.5	49.0
950-80-48	9.5	2.5	1.5	49.0
950-82-188	9.5	2.563	5.875	31.8
950-82-48	9.5	2.563	1.5	50.2
950-86-188	9.5	2.689	5.875	33.4
950-86-48	9.5	2.689	1.5	54.0
950-88-48	9.5	2.75	1.5	53.9
950-96-48	v	3	1.5	58.7
100-80-48	10	2.5	1.5	54.4
100-100-48	10	3.125	1.5	68.0
100-116-48	10	3.625	1.5	78.8
100-124-48	10	3.875	1.5	84.3
105-56-200	10.5	1.75	6.25	27.8
105-58-200	10.5	1.813	6.25	28.7
105-100-200	10.5	3.125	6.25	49.6
105-106-200	10.5	3.313	6.25	52.5
110-128-48	11	4	1.5	105.7

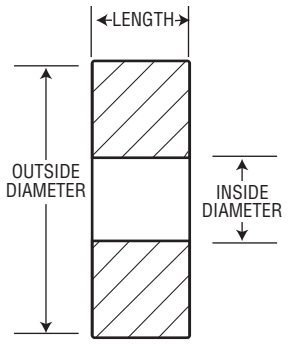

Custom Capabilities
Forgings

Martin Tool and Forge, located in Fort Worth, Texas, has been a leading supplier of quality American forged products since 1917. Martin forgings are well regarded for Quality, Innovation, Reliability & Cost Savings.

Know how garnered over many decades provides unsurpassed benefit for the industrial user of custom forgings. This includes all phases in the forging process - die design and engineering, forging, coining, heat treating, and polishing.

Hammers ranging in size from 1,000 to 5,000 pounds produce finished parts from a few ounces to 50 pounds. Various alloys, considerable capacity, and secondary machining capability enable Martin to deliver near 100% density requirements in a cost effective manner.

Manufacturing Capabilities

Martin utilizes **closed impression die forging** where two dies containing the impression of the shape are brought together deforming the metal. Martin provides two types of closed impression die forgings: **Hammer Forgings** and **Press Forgings.**

Hammer Forging

Forging on a hammer is carried out in a succession of die impressions using repeated blows. Hammer forging can work to nearer net shape with smaller forging allowance, therefore on high cost or difficult to machine alloys there can be significant advantages in the Hammer Forging process. Hammer forgings can usually produce larger and heavier parts than press forgings.

Press Forging

The stock is usually hit only once in each die impression. Increased deformation and control achieved through press forging will give the material better consistency of properties.

Custom Capabilities
Forgings

Material Capabilities

Hammers

Up to 20" length

Carbon Steel	.25 to 45 lb
Alloy Steel	.25 to 45 lb
Stainless Steel	.15 to 25 lb

Presses

Up to
12" diameter or 14" length

Carbon Steel	1.5 to 40 lb
Alloy Steel	1.5 to 40 lb
Stainless Steel	1.5 to 20 lb

Secondary Operations

Other metalworking and inspection processes complement the forging of carbon, alloy and stainless steel components and parts.

- Heat Treatment
- CNC Machining, Broaching
- Magnetic Particle Inspection
- Liquid Penetrant Inspection
- Grinding, Polishing
- Cleaning
- Plating or Coating
- Coining

Benefits

- **High impact strength and structural integrity**
- Extremely **high consistency** of material and dimensions of parts
- **Higher strength to weight ratios** reduce both weight and size when close fit or weight issues are a factor
- Forging can produce **complex shapes** that otherwise may require multiple manufacturing processes
- Forged parts are **compatible with most secondary operations** such as heat treating, machining and fabrication
- In many cases **one forged part can be created where multiple parts were originally used**, reducing labor cost
- Martin's dedication to quality and service, is second to none

Watch the Forge & Foundry Video
scan QR code or visit: http://bit.ly/Forge-Foundry

Case Study:

Application: Counter weight on unit handling equipment

Problem: Parts were being milled in-house from purchased burned plate. Process was expensive, but low volumes had prevented consideration of alternate methods of manufacture.

Solution: Instead of utilizing their expensive CNC milling equipment on relatively low-tech parts, Martin designed a simple die for a forged part, which worked well for medium quantity production runs. When compared to sourcing costs, production time, and scrap, the forged part was less expensive than the milled part. The real savings has resulted from the enhanced utilization of the CNC milling equipment for other, more profitable work

Custom Capabilities
Sintered Metal

Sintered Metal

Sintered metal is an excellent choice for a wide variety of products especially those with irregular shapes that would be difficult to manufacture using conventional methods.

Commonly associated with large quantity runs of fairly simple products, the sintered metal process also effectively addresses small quantities for many complex and multi-level parts where intricate machining or milling was required. Smooth surface finishes, self-lubrication, and tolerance repeatability are just a few of the attributes resulting from this technology. Using a wide range of alloys, Martin produces custom sintered parts for many industries and applications.

Advantages

- Superior resistance and performance
- Uniform tolerances
- High density
- Extremely smooth surface finish
- Self-lubricating
- 12% less weight than Steel

Manufacturing

Martin Sintered Steel presses average 750 tons, and can press up to 2000 tons.

Presses delivering more than 880 tons of pressure form parts from bronze, iron, copper, manganese, etc.

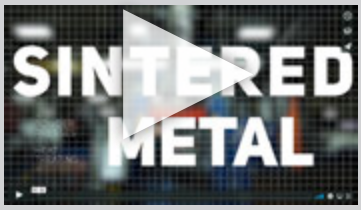

Watch the Sintered Metal Video

scan QR code or visit:
http://bit.ly/SinteredMetal

Case Study:

Application: Timing plate on an agricultural implement

Problem: Production of parts required several steps and the use of several outside sources. All these factors led to inconsistent tolerances, difficulty in coordination of lead times, scrapped parts and production interruptions.

Solution: Martin reviewed sample parts and prints. Martin met with OEM engineering and service personnel to better understand the application. The Martin sintered component reduced the total cost of each part by an average of 54%, slashed acquisition costs and allowed for deliveries using staged release dates

Custom Capabilities
Foundry & Injection Molded Plastics

Foundry

Operating its own foundry enables Martin to provide its customers with quality assurance, quick lead times, and application engineering assistance on cast and ductile iron parts.

With an upper range of 96" in diameter and 10,000 pounds, our own pattern shop, and streamlined access to secondary machining, Martin's comprehensive capabilities serve a broad spectrum of industrial uses.

Case Study:

Application: Conveyor

Problem: Redesign of equipment required flywheel and synchronous drive to be used in more compact area. The two separate components had clearance problems.

Solution: Martin designed a one piece casting which allowed machining of a duplex drive to fit in tight area. Equipment is more compact, one final part rather than two saves costs, and installation time is reduced

Watch the Forge & Foundry Video

scan QR code or visit: http://bit.ly/Forge-Foundry

Injection Molded Plastics

Since the inception of our line of injection molded plastic components, Martin has emerged as a leading supplier of cost effective non-metallic products.

A combination of polymers are used to achieve desired wear, corrosion resistance, and color characteristics. Injection molded plastic is also advantageous in non-sparking and sanitary applications.

While the final form of most components is achieved directly from the press, Martin is able to perform secondary machining on molded parts if necessary.

Case Study:

Application: Packaging equipment

Problem: A sticky product required cleaning with a caustic solution which led to corrosion based fatigue of a threaded collar. In addition, high maintenance costs in the field were encountered due to difficulty of replacing the seized collar.

Solution: A Martin manufactured part made of glass filled nylon was produced. The Martin part withstood constant exposure to the caustic solution and prevented the seizing of threads which provided a longer part life. Unit price was reduced by approximately 34%, warranty claims dropped significantly and the user logo stamped on the part aided in capturing replacement part sales

Milled Plastics

Whether it is a simple alteration, rebore, or a product requiring secondary operations such as drilling, tapping, or inserts, Martin's trained and dedicated staff are standing ready to tackle your most demanding request.

Our CNC machines are able to mill a variety of plastic and non-metallic materials from 1/16" to over 8" thick, with diameters from 2" to 60" in a variety of unique shapes.

Additionally, secondary operations may be completed in-house when projects require both non-metallic and metallic components to complete one unit.

Martin manufactures parts from a variety materials including Nylon, UHMW, Acetal and more. They can be solid construction or multiple pieces requiring secondary operations. One part or 1,000, count on Martin to provide you with quick turnaround times on all your Made-to-Order plastic parts.

Case Study:

Application: Split bearing block made of UHMW found on the ends of an agitator that stirs a chemical treating solution in a beef processing plant. Thus the components are continuously submerged into a corrosive liquid

Problem: This agitator is an integral part of the streamlined processing at this facility, therefore it is necessary to have components readily on hand and available to keep it up and running. However, this customer was struggling to get the split bearing blocks from their current supplier in a timely manner.

Solution: Realizing an opportunity to service this end user, Martin was able to provide a quality component with a quick delivery at a lower price than the previous supplier. These split block bearings are used in many different industries and applications

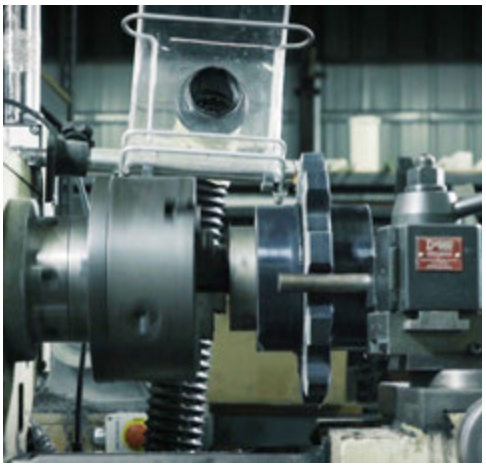

Spin weld parts up to 12½" Diameter.

Watch the Machining Plastics Video

scan QR code or visit: http://bit.ly/MilledPlastics

Custom Capabilities
Laser Cutter & Waterjet

Laser Cutter

Martin has two laser cutting tables in their material handling division. These lasers are self loading and unloading, which means that once set up is complete, they can run unattended. These lasers can cut up to 3/4" thick mild or stainless steel and have a work envelope of 2 meters x 4 meters.

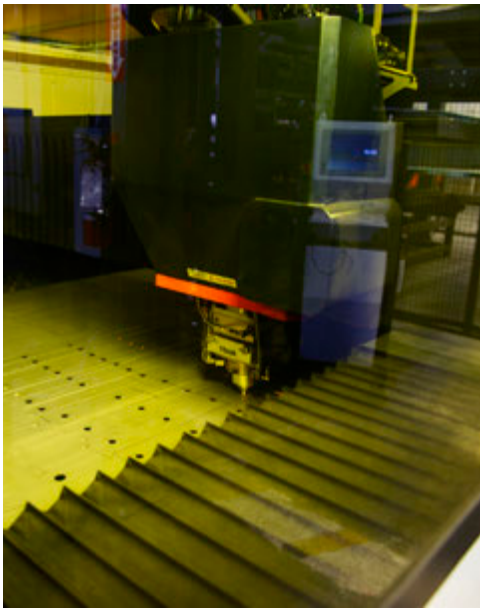

Water Jet - High Pressure Water Cutter

Our waterjet cutter penetrates stainless steel conveyor type sprockets and a number of other components with more precision than a burn table.

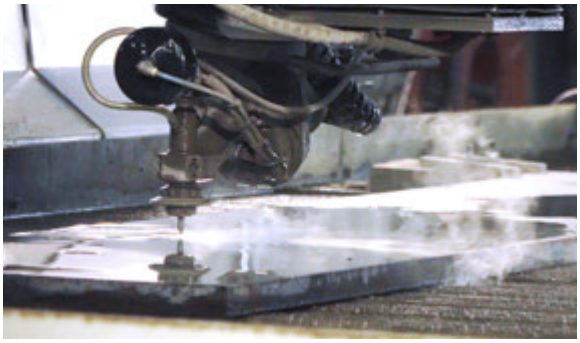

Advantages

- No material limitations
- Work Envelope: 150" x 79"
- 5 axis capability
- Highest in the industry water pressure of 87,500 PSI
- Easily cut up to 5" steel plate precisely and accurately, and up to 6" with adjustments

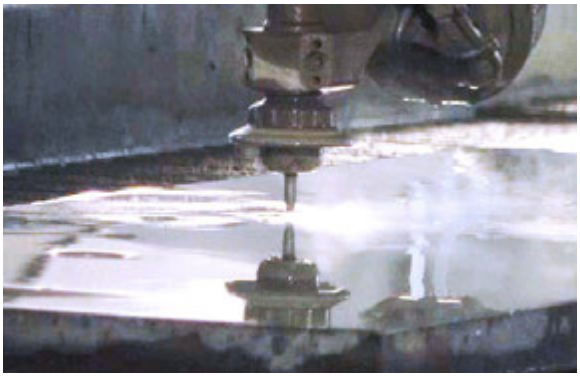

Watch the Water Jet Video

scan QR code or visit: https://bit.ly/WJetCapability

Notes