COUPLINGS

PRODUCT **PAGE**

INDEX **C-1**

COMPARISON CHART **C-2**

QUADRA-FLEX® . . . . . **C-4 – C-24**

SLEEVE SELECTION . . . . . C-7 – C-8
SELECTION PROCEDURE C-9
SLEEVES C-14
FLANGES . . . . . C-15 – C-19
KEYSEAT DIMENSIONS C-18
SPACER FLANGES . . . . . C-20 – C-23
INSTALLATION C-24

CHAIN COUPLING . . . . . **C-25 – C-27**

BORED-TO-SIZE C-26
QD C-26
TAPER BUSHED C-26
COUPLING SELECTION C-27
PLAIN BORE C-27
COVERS C-27

JAW COUPLING . . . . . **C-28 – C-30**

HORSEPOWER RATINGS C-29
ML & MS HUBS C-30
ML & MS SPIDERS C-30

Martin-FLEX® . . . . . **C-31 – C-32**

STOCK SIZES C-31
ENGINEERING C-32

BLUE-FLEX® GRID COUPLING . . . . . **C-33 – C-57**

COMPONENT GUIDE . . . . . C-34 – C-35
SELECTION PROCEDURE . . . . . C-36 – C-41
T10 STYLE C-42
T20 STYLE C-43
T31 STYLE . . . . . C-44 – C-45
T35 STYLE . . . . . C-46 – C-47
BORE-TO-SIZE HUBS C-48
SPACER AND SHAFT HUBS C-49
COMPONENTS C-50
ENGINEERING DATA . . . . . C-51 – C-57

GO-FLEX® FLEXIBLE COUPLING . . . . . **C-58 – C-69**

NOMENCLATURE C-59
INSERTS C-60
COVERS C-61
SELECTION GUIDE . . . . . C-62 – C-73
INSTALLATION INSTRUCTIONS . . . . . C-74 – C-76

Coupling Comparison Chart

Selection Criterion		Coupling Type					
		ML - Jaw	Chain	Quadra-Flex	Martin-Flex	Go-Flex	Blue-Flex
Shaft Size Range	inch	1/8" to 2-5/8"	7/16" to 6-1/8"	3/8" to 5-1/2"	3/8" to 3-1/2"	1/2" to 11"	1/2" to 13"
	mm	4 to 65	12 to 160	9 to 140	9 to 90	12 to 280	12 to 330
Torque Range	in-lbs	3.5 to 6,228	1,921 to 151,622**	60 to 72,480	649 to 9,076	365 to 1,680,000	460 to 1,650,000
	Nm	0.4 to 704	218 to 17,135	6.78 to 8,190	73 to 1025	40 to 189,840	52 to 186,450
Maximum Angular Misalignment Capability		1/2° to 1°	2°	1°	4°	2°	.25°
Temperature Range Standard Element		-40° to 212° F	-30° to 225° F	-30° to 275° F	-40° to 180° F	-60° to 212° F	-40° to 250° F
		-40° to 100° C	-35° to 108° C	-35° to 135° C	-40° to 85° C	-50° to 100° C	-40° to 121° C
Reactionary Loads due to Misalignment		Medium	Low	Low	Medium	Low	High
Torque to OD Capability		Good	Good	Fair	Fair	Fair	Good
Speed Capability		Good	Good	Fair	Fair	Good	Good
Torsional Stiffness		Low	Medium	Low	Low	Medium	Medium
Ease of Installation/ Maintenance		Excellent	Excellent	Excellent	Excellent	Excellent	Fair
Chemical Resistance		Good	Good	Good	Fair	Good	Fair
Adaptable to Several Designs		Excellent	Poor	Excellent	Good	Excellent	Excellent
Damping Capacity		Good	Poor	Excellent	Excellent	Good	Good
Industry Interchangeable		Yes	Yes	Yes	Yes	Yes	Yes

** MAX Allowable Torque below 50 RPM
*** Half-Coupling ONLY

Whatever Your Need For Couplings — Martin Has Them

Martin Jaw Couplings

Two Complete Lines of Jaw Couplings. One for Greater Horsepower and One for Interchangeability.

ML — Type

MS — Type

Martin-Flex® flexible couplings

Smoothly transmit power while compensating for shaft misalignment to 4°, parallel misalignment to .125" and end float to .313". The two piece flange design provides quick and easy installation and the elastomeric element absorbs shock and torsional vibration through a wide temperature range.

Martin Chain Couplings

The most complete line of Chain Couplings available in the industry

S/B

BS

TB

QD

Aluminum

Plastic

Martin Quadra-Flex®

A proven design which offers long life, torsional flexibility, ease of installation, and withstands misalignment, shock, and vibration.

Martin Blue-Flex® Grid Couplings

Are the best option where both high torque levels and dampening requirements exist.

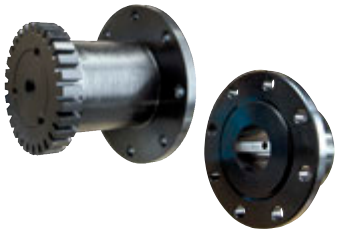

Martin Go-Flex® Flexible Couplings

Is one of the easiest to install, maintain, and repair!

QUADRA-FLEX® FLEXIBLE COUPLINGS

Stocked Nationwide
In Sizes 3 Through 16

Styles J, S, B, and
SC Spacers

Quadra-Flex®
4-Way Flexing

Martin Quadra-Flex® Couplings, Non Lubricated, Maintenance Free, Easy and Quick Installation

Handles All Combinations of Shock, Vibration, and Misalignment

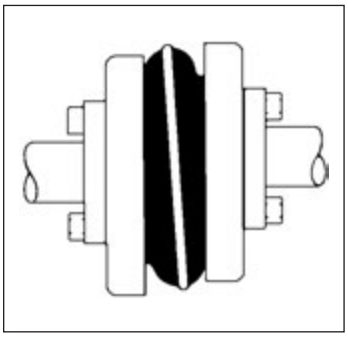

Parallel

Quadra-Flex® couplings absorb parallel misalignment without wear and with minimal loss of energy.

The amount of parallel offset handled varies by size from .015" on the size 5 up to .062" on the size 16. This minimizes the radial loads on bearings when parallel misalignment occurs.

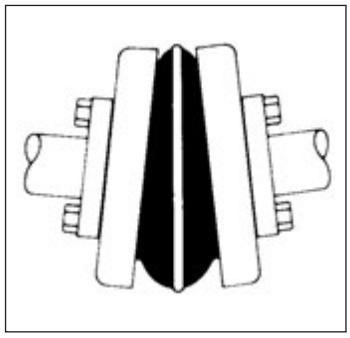

Angular

Due to the flexing characteristics of the sleeve and the locking action of the teeth, Quadra-Flex® couplings easily handle angular misalignment up to 1 degree without any appreciable wear.

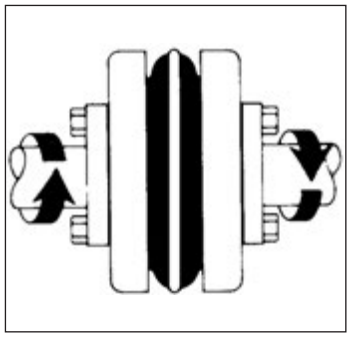

Torsional

Quadra-Flex® sleeves are torsionally resilient and are well suited to absorbing shocks and dampening vibrations that would otherwise be transmitted between the equipment.

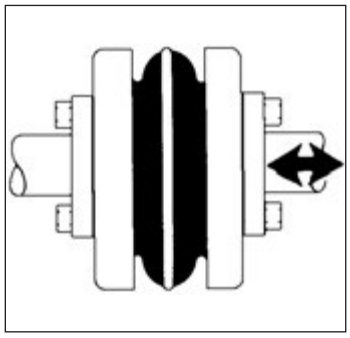

S/B

The axial flexibility of the sleeve allows the Quadra-Flex® coupling to accept a limited amount of end float. This serves to reduce thrust loads transferred to bearings. Quadra-Flex® units will accept axial movement of approximately .125".

Available in Three Styles

Type J and S Flanges

Bored-to-size flanges are manufactured for a slip fit on standard shafting. Available from stock in a wide range of shaft sizes.

Available in Three Styles

Manufactured from high strength cast iron to fit standard QD bushings in sizes 6 thru 16.

Fast Coupling Disassembly

Martin offers the first true drop-out spacer assembly for the 4JSC spacer coupling. The center portion of the spacer can be taken out, just as in the 5SC thru 14SC, by simply removing four cap screws in each hub. The couplings center section can then be lifted out and the pump gaskets exposed. Flats on the spacer hubs facilitate turning shafts with a wrench.

Type SC Spacer Flange

Quadra-Flex® SC Spacer Couplings feature all standard spacing requirements for the pump industry. Spacer sizes range from sizes 4 thru 14.

Quadra-Flex® Nomenclature

Type	Description
J ★	SINTERED STEEL, BORED-TO-SIZE
S	CAST IRON, BORED-TO-SIZE
B	CAST IRON, QD BUSHED
SC	SPACER COUPLING FLANGES

★ #6 Currently Supplied in Cast Iron

Hubs — (For SC flanges)

Type	Description
H	REGULAR LENGTH
HS	SHORT LENGTH

Sleeves

Type	Description
JEM	TPR – 1-PIECE SOLID, THERMOPLASTIC
JEMS	TPR – 1-PIECE SPLIT, THERMOPLASTIC
EM	TPR – 2-PIECE W/RETAINING RING
E	EPDM – 2-PIECE W/RETAINING RING
N	NEOPRENE – 2-PIECE W/RETAINING RING
H	HYTREL – 1-PIECE SOLID
HS	HYTREL – 2-PIECE

Quadra-Flex® couplings come in a variety of styles and designs to meet specific customer needs. These include flanges and sleeves of various types and materials. The total product line includes 13 sizes varying in torque ratings up to 72,000 in-lbs.

When ordering Quadra-Flex® couplings, the following basic procedure should help expedite order processing. For coupling flanges, give the basic coupling size, then the letter for the type flange followed by the bore size required. For coupling sleeves, give the coupling size followed by the letter(s) designating the type and material required. (See above)

The following are various examples for reference:

Example: Type J Flange

	Size	Flange	Bore
5J × .75"	5	J	.75"
7S × 30mm	7	S	30mm

(**Note:** Bored-to-size flanges are furnished with standard keyway and 2 setscrews unless specified otherwise.)

Example: Type B Flange

	Size	Flange	Bushing
8B — SH	8	B	SH

(Note: The SH bushing with required bore size should be specified separately.)

Example: Sleeves

	Size	Style & Material
8JEM	8	Solid, TPR
13E	13	2 Piece, EPDM

(Note: Unless specified, TPR (3 thru 12) or EPDM (13 thru 16) will be supplied.)

Example: Complete spacer coupling

1	6EM	(6 TPR 2 Piece Sleeve)
2	6sc35	(Flanges for 3.5" dropout)
1	6H × 1"	(6 Spacer Hub for 1" Bore)
1	6H × 1.125"	(6 Spacer Hub for 1.125" Bore)

Sleeve Selection

Quadra-Flex® coupling sleeves are available in four different types of compounds. These include TPR (Thermoplastic Rubber) in types JEM, JEMS, EM; EPDM Rubber in type E; Neoprene in type N; Hytrel in type H and HS. To determine the sleeve best suited for the application, the material characteristics are given below.

TPR
(Sizes 3-12)

Quadra-Flex® couplings are usually supplied with TPR sleeves in sizes 3-12. TPR is a general use sleeve which combines the characteristics of both EPDM & Neoprene into one. These sleeves operate within a temperature range from -50° F to +275° F (-46° C to +135° C). Torsional flexibility is 15°.

EPDM
(Sizes 13-16)

Quadra-Flex® couplings are usually supplied with EPDM rubber sleeves in sizes 13-16. EPDM is a general use sleeve and can operate within a temperature range from -30° F to +275° F (-34° C to +135° C). Torsional flexibility is 15°.

NEOPRENE
(Sizes 11-16)

Neoprene flexible sleeves are also available in sizes 11-14. These sleeves offer a higher resistance than EPDM and are self-extinguishing. Operating temperature range for this sleeve is 0° F to +200° F (-18° C to +93° C). Torsional flexibility is 15°.

*HYTREL®
(Sizes 6-14)

Hytrel sleeves are molded specifically for high torque applications. The type H will transmit approximately four times as much power as an equivalent TPR, EPDM, or Neoprene sleeve. Hytrel has an operating temperature from -65° F to +250° F (-54° C to +121° C). Torsional flexibility is 7°.

Note: Do not use a Hytrel sleeve as a replacement for a TPR, EPDM, or Neoprene sleeve.

Sleeve Chemical Resistance

Resistance To:	TPR	EPDM	Neoprene	Hytrel ★
Acetone	A	A	B	B
Ammonia, Anhydrous	B	T	A	N
Ammonium Hydroxide Solutions	T	A	A(158F)	T
ASTM hydrocarbon test fluid	N	C	X	A
ASTM oil no. 1	B	C	A	A
ASTM oil no. 3	B	C	B(158F)	A
ASTM reference fuel A	B	C	A	A
ASTM reference fuel B	B	C	C	A
ASTM reference fuel C	B	X	C	B
Benzene	C	C	C	B
Butane	B	B	A	A
Carbon Tetrachloride	X	C	C	C
Chlorobenzene	C	X	X	X
Chloroform	X	C	C	C
Chromic Acid, 10-50%	T	T	C	N
Dowtherm A Solvent	X	N	B	N
Ethyl Alcohol	A	A	A(158F)	A
Ethylene Glycol	A	A	A(158F)	A
Fuel Oil	B	X	A	A
Gasoline	B	B-C	B	A
Glycerine	A	T	A(158F)	A
Hydraulic Oils	B	N	A	A
Hydrochloric Acid, 20%	A	T	A	B
Hydrogen Peroxide, 881/2%	N	T	B	T
Isopropyl	A	T	A	A

Resistance To:	TPR	EPDM	Neoprene	Hytrel ★
Kerosene	B	X	B	T
Lacquer Solvents	T	...	C	B
Lubricating Oils	B	X	B(158F)	A
Methyl Alcohol	A	T	A(158F)	A
Mineral Oil	B	X	A	A
Naphtha	B	C	C	A
Nitric Acid, 10%	A	T	B	B
Nitrobenzene	T	A	C	C
Phenol	T	T	B	C
Phosphoric Acid, 20%	A	T	T	N
Phosphate Esters	A	A	C	A
Pickling Solution (20% Nitric Acid, 4% HF)	N	X	B-C	X
Soap Solutions	A	T	A(158F)	A
Sodium Hydroxide, 20%	A	A	A	A
Stearic Acid	T	T	B(158F)	T
Sulfuric Acid, up to 50%	A	T	A(158F)	A
Sulfuric Acid, up to 80%	A	T	B-C	C
Tannic Acid, 10%	T	T	A	T
Toluene	C	C	C	B
Trichloroethylene	C	X	C	C
Turpentine	B	C	C	N
Water	A	A(158F)	A(212F)	A(158F)
Xylene	C	C	X	B

A — Fluid has little or no effect
B — Fluid has minor to moderate effect
C — Fluid has severe effect
N — No evaluation has been attempted.
T — No data; likely to be compatible
X — No data; not likely to be compatible

*Hytrel is a Registered Trademark of Dupont

Selection Procedure

When the driver is an electric motor with standard speed.

Step 1. Determine Service Factor (SF) Symbol based on equipment listed on page C-10.

Step 2. Determine proper Service Factor from chart at top of page C-10.

Step 3. Refer to page C-12 and C-13 for proper selection of coupling. Based on chemical resistance and operating environment found on page C-8, select from chart the type of sleeve material. Find RPM of motor, then, in the column for service factor determined in Step 2, read down to the corresponding horsepower of motor being used as the driver. The number listed is the correct coupling size.

Example: A coupling is needed to connect a 25 HP standard electric motor to a lumber log haul at 1750 RPM.
1. Service Factor Symbol — H
2. Service Factor — 2.0
3. Coupling Size — 9 with TPR sleeve or 6 with Hytrel Sleeve

Step 4. Select flanges from pages C-15 thru C-19, check coupling bore size range for proper shaft fit.

★ **NOTE: Do not oversize coupling hub — will cause premature wear of element.**

When the driver is other than an electric motor or the speeds are different than those shown in the chart on page C-11.

Step 1. Follow steps 1 & 2 in previous procedure.

Step 2. Calculate Horsepower at 100 RPM as follows:

$$\text{HP at 100 RPM} = \frac{\text{HP} \times \text{Service Factor} \times 100}{\text{Coupling RPM}}$$

Step 3. Select coupling size from Tables A or C. Find a HP equal to or greater than the HP/100 RPM

Step 4. Check Maximum bore to be sure that both shaft sizes do not exceed figure listed for size selected in step 4. If maximum is exceeded select the next largest size which will allow for bore size. Do not exceed maximum RPM for new size selected.

Example: A bucket elevator is driven by a motor/reducer and requires a coupling to transmit 14 HP at 1300 RPM.
1. Service Factor Symbol — M
2. Service Factor — 1.5
3. HP at 100 RPM = $\frac{14 \times 1.5 \times 100}{1300} = 1.61$ HP/100 RPM
4. Refer to page C-11; under column for 100 RPM the required 1.61 HP falls between the size 7 (1.2) and the size 8 (1.8). Correct selection is size 8 with TPR sleeve. Check bore sizes for flanges on pages C-15 thru C-19.

Maximum RPM and Allowable Misalignment

Size	Maximum RPM	Types JEM, JEMS, EM, E and N		Types H and HS	
		Parallel	Angular	Parallel	Angular
3	9200	0.010	0.035	—	—
4	7600	0.010	0.043	—	—
5	7600	0.015	0.056	—	—
6	6000	0.015	0.070	0.010	0.016
7	5250	0.020	0.081	0.012	0.020
8	4500	0.020	0.094	0.015	0.025
9	3750	0.025	0.109	0.017	0.028
10	3600	0.025	0.128	0.020	0.032
11	3600	0.032	0.151	0.022	0.037
12	2800	0.032	0.175	0.025	0.042
13	2400	0.040	0.195	0.030	0.050
14	2200	0.045	0.242	0.035	0.060
16	1500	0.062	0.330	—	—

Note: Values shown above apply if the actual torque transmitted is more than 1/4 the coupling rating. For lesser torque, reduce the above values by .5.

Service Factors

Service Factors For Quadra-Flex® Couplings

Service Factor Symbol	Electric Motor Standard Torque	Electric Motor High Torque	Turbines	Reciprocating Engines
L (LIGHT)	1.25	1.5	1.0	1.5
M (MEDIUM)	1.5	2.0	1.25	2.0
H (HEAVY)	2.0	2.5	1.5	2.5

Table 1

Application	SF Symbol
AGITATORS - Paddle, Propeller, Screw	L
BAND RESAW	M
BARGE HAUL PULLER	H
BARKING (Lumber)	H
BAR SCREEN (sewage)	L
BATCHES (textile)	L
BEATER AND PULPER (paper)	M
BENDING ROLL (metal)	M
BLEACHER (paper)	L
BLOWERS	
Centrifugal, Vane	L
Lobe	M
BOTTLING MACHINERY	L
BREW KETTLES (distilling)	L
BUCKET ELEVATOR OR CONVEYOR	M
CALENDERS	
Calender (paper)	M
Calender-super (paper, rubber)	H
CANE KNIVES (sugar)	M
CARD MACHINE (textile)	H
CAR DUMPERS	H
CEMENT KILN	H
CENTRIFUGAL BLOWERS	
COMPRESSORS, FANS or PUMPS	L
CHEMICAL FEEDERS (sewage)	L
CHILLER (oil)	M
CHIPPER (paper)	H
CIRCULAR RESAW	M
CLARIFIER or CLASSIFIER	L
CLAY WORKING MACHINERY	M
COLLECTORS (sewage)	L
COMPRESSORS	
Centrifugal	L
Reciprocating	*
Screw, Lobe	L
CONCRETE MIXERS	M
CONVERTING MACHINE (paper)	M
CONVEYORS	
Apron, Assembly Belt, Flight	L
Oven, Screw	L
Bucket	M
COOKERS- Brewing, Distilling, Food	L
COOLING TOWER FANS	H
COUCH (paper)	M
CRANES & HOISTS	M
Heavy Duty Mine	H
CRUSHERS — Cane (sugar), Stone, Ore	H
CUTTER — Paper	H
CYLINDER (paper)	H
DEWATERING SCREEN (sewage)	M

Application	SF Symbols
DISC FEEDER	L
DOUGH MIXER	M
DRAW BENCH CONVEYOR & Main Drive	H
DREDGES	
Cable Reel, Pumps	M
Cutter Head Drive, Jig Drive	H
Screen Drive	H
Maneuvering and Utility Winch	M
Stacker	M
DYNAMOMETER	L
DRYERS (rotary)	M
EDGER (lumber)	H
ELEVATORS	
Bucket	M
Escalator	L
Freight, Passenger, Service, Man Lift	H
ESCALATORS	L
EXTRUDER (metal)	H
FANS	
Centrifugal	L
Cooling Tower	H
Forced Draft, Large Industrial, Mine	M
FEEDERS	
Apron, Belt, Disc	L
Reciprocating	H
Screw	M
FILTER, PRESS-OIL	M
GENERATORS	
Uniform load	L
Varying load, Holst	M
Welders	H
GRIT COLLECTOR (sewage)	L
GRIZZLY	H
HAMMERMILL	
Light Duty, Intermittent	M
Heavy Duty, Continuous	H
HOISTS	
Heavy Duty	H
Medium Duty	M
JORDAN (paper)	H
KILN, ROTARY	H
LAUNDRY WASHER or TUMBLER	H
LINE SHAFTS	L
LOG HAUL (lumber)	H
LOOM (textile)	M
MACHINE TOOLS, MAIN DRIVE	M
MANGLE (textile)	L
MASH TUBS (distilling)	L
MEAT GRINDER	M
METAL FORMING MACHINES	M

Application	SF Symbols
MILLS	
Ball, Pebble, Rod, Tube	H
Rubber, Tumbling	H
Dryer and Cooler	M
MIXER	
Concrete, Muller	M
Banbury	H
ORE CRUSHER	H
OVEN CONVEYOR	L
PLANER (metal or wood)	M
PRESSES	
Brick, Brlquette Machine	H
Notchlng, Paper, Punch, Printing	M
PUG MILL	M
PULP GRINDER (paper)	H
PULVERIZERS	
Hammermill — light duty, Roller	M
Hammermill — heavy duty, Hog	H
PUMPS	
Centrifugal, Axial	L
Gear, Lobe, Vane	M
Reciprocating — sgl. or dbl. acting	*
REEL, REWINDER (paper) CABLE	M
ROD MILL	H
SAWDUST CONVEYOR	L
SCREENS	
Air Washing, Water	L
Rotary for coal or sand	M
Vibrating	H
SCREW CONVEYOR	L
SLAB CONVEYOR (lumber)	M
SLITTERS (metal)	M
SOAPERS (textile)	L
SORTING TABLE (lumber)	M
SPINNER (textile)	M
STOKER	L
SUCTION ROLL (paper)	M
TENTER FRAMES (textile)	M
TIRE BUILDING MACHINES	H
TIRE & TUBE PRESS OPENER	L
TUMBLING BARRELS	H
WASHER and THICKENER (paper)	M
WINCHES	M
WINDERS, Paper, Textile, Wire	M
WINDLASS	M
WIRE	
Drawing	H
Winding	M
WOODWORKING MACHINERY	L

Coupling Rating

Table 2A — Thermoplastic Rubber (TPR), EPDM & Neoprene

Coupling Size	Sleeve Construction	Basic HP Rating Per Given RPM					Rated Torque (in-lb)	Torsional • Stiffness Factor (in-lb/radians)	Maximum RPM
		100	860	1160	1750	3500			
3	TPR	0.12	1.1	1.4	2.2	4.3	78	229	9200
4	TPR	0.25	2.1	2.9	4.3	8.7	156	458	7600
5	TPR	0.50	4.3	5.7	8.7	17	312	916	7600
6	TPR	0.93	8	11	16	32	585	1718	6000
7	TPR	1.5	13	17	26	52	940	2769	5250
8	TPR	2.3	20	27	41	82	1475	4335	4500
9	TPR	3.7	32	43	65	130	2340	6875	3750
10	TPR	5.9	51	69	104	207	3735	10980	3600
11	TPR	9.3	80	108	164	327	5890	17300	3600
12	TPR	15	128	172	260	-	9360	27500	2800
13	EPDM & Neoprene	23	201	271	410	-	14750	43350	2400
14	EPDM & Neoprene	37	319	431	650	-	23400	68755	2200
16	EPDM	75	645	870	-	-	47250	180480	1500

Table 2C — Hytrel

Coupling Size	Sleeve Construction	Basic HP Rating Per Given RPM					Rated Torque (in-lb)	Torsional • Stiffness Factor (in-lb/radians)	Maximum RPM
		100	860	1160	1750	3500			
3★	HYTREL	-	-	-	-	-	-	-	-
4★	HYTREL	-	-	-	-	-	-	-	-
5★	HYTREL	-	-	-	-	-	-	-	-
6	HYTREL	2.90	25	33	50	100	1800	10000	6000
7	HYTREL	4.6	39	53	80	160	2875	20000	5250
8	HYTREL	7.2	62	83	126	252	4530	30000	4500
9	HYTREL	11.4	98	133	200	400	7200	47500	3750
10	HYTREL	18	155	209	315	630	11350	100000	3600
11	HYTREL	29	246	331	500	1000	18000	125000	3600
12	HYTREL	50	430	580	875	-	31500	225000	2800
13	HYTREL	75	645	870	1312	-	47268	368900	2400
14	HYTREL	115	989	1334	2013	-	72480	593250	2200

★ Hytrel sleeves are available on a made-to-order basis, Consult factory.
• Values shown are for an ambient temperature of 75° F (24° C)

Sleeve Selection Chart

Selection Chart for TPR[1], EPDM, & Neoprene Sleeves

HP	860 RPM Motor					1160 RPM Motor					1750 RPM Motor					3500 RPM Motor				
	Service Factor					Service Factor					Service Factor					Service Factor				
	1.0	1.25	1.5	2.0	2.5	1.0	1.25	1.5	2.0	2.5	1.0	1.25	1.5	2.0	2.5	1.0	1.25	1.5	2.0	2.5
.5	3	3	3	4	4	3	3	3	3	4	3	3	3	3	3	—	—	—	—	—
.75	3	4	4	4	5	3	3	4	4	4	3	3	3	3	4	3	3	3	3	3
1	4	4	4	5	5	3	4	4	4	5	3	3	3	4	4	3	3	3	3	3
1.5	4	5	5	5	6	4	4	5	5	5	3	4	4	4	5	3	3	3	3	4
2	5	5	5	6	6	4	5	5	5	6	4	4	4	5	5	3	3	3	4	4
3	5	6	6	6	7	5	5	6	6	6	4	5	5	5	6	3	4	4	4	5
5	6	6	7	7	8	6	6	6	7	7	5	5	6	6	6	4	4	5	5	5
7.5	7	7	8	8	9	6	7	7	8	8	6	6	6	7	7	5	5	5	6	6
10	7	8	8	9	9	7	7	8	8	9	6	6	7	7	8	5	5	6	6	6
15	8	9	9	10	10	8	8	9	9	10	7	7	8	8	9	6	6	6	7	7
20	9	9	10	10	11	8	9	9	10	10	7	8	8	9	9	6	6	7	7	8
25	9	10	10	11	11	9	9	10	10	11	8	8	9	9	10	6	7	7	8	8
30	10	10	11	11	12	9	10	10	11	11	8	9	9	10	10	7	7	8	8	9
40	10	11	11	12	12	10	10	11	11	12	9	9	10	10	11	7	8	8	9	9
50	11	11	12	12	13	10	11	11	12	12	9	10	10	11	11	8	8	9	9	10
60	11	12	12	13	13	11	11	12	12	13	10	10	11	11	12	8	9	9	10	10
75	12	12	13	13	14	11	12	12	13	13	10	11	11	12	12	9	9	10	10	11
100	12	13	13	14	14	12	12	13	13	14	11	11	12	12	13	9	10	10	11	11
125	13	13	14	14	—	12	13	13	14	14	11	12	12	13	13	10	10	11	11	—
150	13	14	14	16	16	13	13	14	14	16	12	12	13	13	14	10	11	11	—	—
200	14	14	16	16	16	13	14	14	16	16	12	13	13	14	14	11	11	—	—	—
250	14	16	16	16	16	14	14	16	16	16	13	13	14	14	—	11	—	—	—	—
300	16	16	16	16	—	14	16	16	16	16	13	14	14	—	—	—	—	—	—	—
350	16	16	16	—	—	16	16	16	16	16	14	14	—	—	—	—	—	—	—	—
400	16	16	16	—	—	16	16	16	16	—	14	14	—	—	—	—	—	—	—	—
450	16	16	—	—	—	16	16	16	—	—	14	—	—	—	—	—	—	—	—	—
500	16	16	—	—	—	16	16	16	—	—	14	—	—	—	—	—	—	—	—	—
600	16	—	—	—	—	16	16	—	—	—	—	—	—	—	—	—	—	—	—	—
700	—	—	—	—	—	16	16	—	—	—	—	—	—	—	—	—	—	—	—	—
800	—	—	—	—	—	16	—	—	—	—	—	—	—	—	—	—	—	—	—	—

[1] Thermoplastic Rubber

Caution: Applications involving reciprocating engines and reciprocating driven devices are subject to critical rotational speeds which may damage the coupling and/or connected equipment. Contact factory with specific requirements.

Hytrel Selection Chart

Selection Chart for Hytrel Sleeves

HP	860 RPM Motor					1160 RPM Motor					1750 RPM Motor					3500 RPM Motor				
	Service Factor					Service Factor					Service Factor					Service Factor				
	1.0	1.25	1.5	2.0	2.5	1.0	1.25	1.5	2.0	2.5	1.0	1.25	1.5	2.0	2.5	1.0	1.25	1.5	2.0	2.5
1	—	—	—	—	—	—	—	—	—	—	—	—	—	—	—	—	—	—	—	—
1.5	—	—	—	—	—	—	—	—	—	—	—	—	—	—	—	—	—	—	—	—
2	—	—	—	—	—	—	—	—	—	—	—	—	—	—	—	—	—	—	—	—
3	—	—	—	—	—	—	—	—	—	—	—	—	—	—	—	—	—	—	—	—
5	—	—	—	—	—	—	—	—	—	—	—	—	—	—	—	—	—	—	—	—
7.5	6H	6H	6H	6H	6H	—	—	—	—	—	—	—	—	—	—	—	—	—	—	—
10	6H	6H	6H	6H	6H	6H	6H	6H	6H	6H	—	—	—	—	—	—	—	—	—	—
15	6H	6H	6H	7H	7H	6H	6H	6H	6H	7H	6H	6H	6H	6H	6H	—	—	—	—	—
20	6H	6H	7H	7H	8H	6H	6H	6H	7H	7H	6H	6H	6H	6H	6H	—	—	—	—	—
25	6H	7H	7H	8H	8H	6H	6H	7H	7H	8H	6H	6H	6H	6H	7H	—	—	—	—	—
30	7H	7H	8H	8H	9H	6H	7H	7H	8H	8H	6H	6H	6H	7H	7H	6H	6H	6H	6H	6H
40	7H	8H	8H	9H	9H	7H	7H	8H	8H	9H	6H	6H	7H	7H	8H	6H	6H	6H	6H	6H
50	8H	8H	9H	9H	10H	7H	8H	8H	9H	9H	6H	7H	7H	8H	8H	6H	6H	6H	6H	7H
60	8H	9H	9H	10H	10H	8H	8H	9H	9H	10H	7H	7H	8H	8H	9H	6H	6H	6H	7H	7H
75	9H	9H	10H	10H	11H	8H	9H	9H	10H	10H	7H	8H	8H	9H	9H	6H	6H	7H	7H	8H
100	9H	10H	10H	11H	11H	9H	9H	10H	10H	11H	8H	8H	9H	9H	10H	6H	7H	7H	8H	8H
125	10H	10H	11H	11H	12H	9H	10H	10H	11H	11H	8H	9H	9H	10H	10H	7H	7H	8H	8H	9H
150	10H	11H	11H	12H	12H	10H	10H	11H	11H	12H	9H	9H	10H	10H	11H	7H	8H	8H	9H	9H
200	11H	11H	12H	12H	13H	10H	11H	11H	12H	12H	9H	10H	10H	11H	11H	8H	8H	9H	9H	10H
250	11H	12H	12H	13H	13H	11H	11H	12H	12H	13H	10H	10H	11H	11H	12H	8H	9H	9H	10H	10H
300	12H	12H	13H	13H	14H	11H	12H	12H	13H	13H	10H	11H	11H	12H	12H	9H	9H	10H	10H	11H
350	12H	12H	13H	14H	14H	12H	12H	12H	13H	14H	11H	11H	12H	12H	12H	9H	10H	10H	11H	11H
400	12H	13H	13H	14H	14H	12H	12H	13H	13H	14H	11H	11H	12H	12H	13H	9H	10H	10H	11H	11H
500	13H	13H	14H	14H	—	12H	13H	13H	14H	14H	11H	12H	12H	13H	13H	10H	10H	11H	11H	—
600	13H	14H	14H	—	—	13H	13H	13H	14H	—	12H	12H	13H	13H	14H	10H	11H	11H	—	—
700	14H	14H	—	—	—	13H	13H	14H	14H	—	12H	12H	13H	14H	14H	11H	11H	—	—	—
800	14H	14H	—	—	—	13H	14H	14H	—	—	12H	13H	13H	14H	14H	11H	11H	—	—	—
900	14H	—	—	—	—	14H	14H	14H	—	—	13H	13H	14H	14H	—	11H	—	—	—	—
1000	—	—	—	—	—	14H	14H	—	—	—	13H	13H	14H	14H	—	11H	—	—	—	—

Quadra-Flex® Sleeves

Martin flexible sleeve elements are offered in four material compounds (Thermoplastic Rubber (TPR), EPDM, Neoprene, and Hytrel) available in three construction styles. Our EM sleeve offers the combination of EPDM's extended temperature range as well as the higher oil resistance which Neoprene provides.

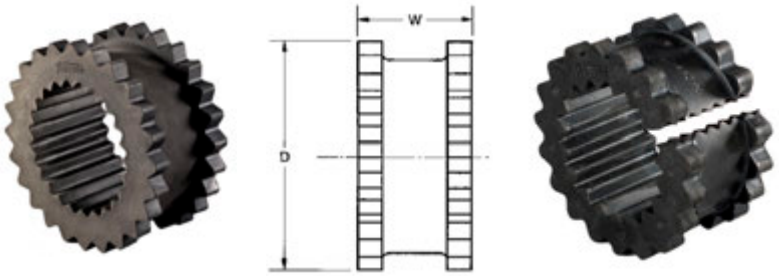

Types JEM — JEMS

Type J sleeves are molded Thermoplastic Rubber (TPR). Available in 1 piece solid (JEM), and 1 piece split, construction (JEMS). TPR material will handle higher temperature ranges as well as be oil resistant.

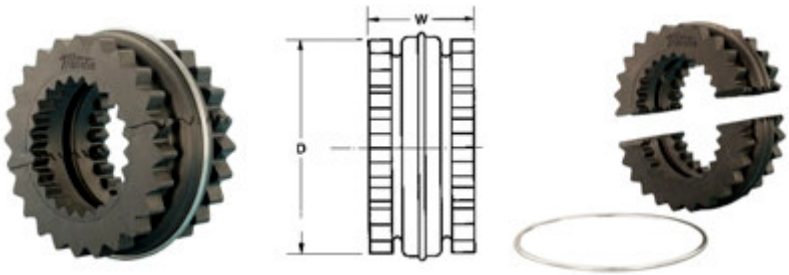

Types EM — E — N

Type EM, E, and N sleeves are of two piece molded construction with Retaining Ring. They are available in Thermoplastic Rubber (Type TPR), EPDM (Type E), or Neoprene (Type N). These can be used with any type flanges within a given size range.

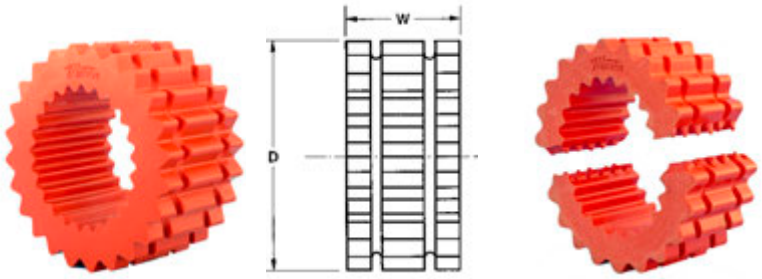

Types H & HS

Martin H & HS sleeves are molded Hytrel for higher torque loading than standard EM sleeves. H & HS sleeves cannot be used with style J and B flanges. Hytrel sleeves are not a direct replacement for TPR, EPDM, or Neoprene sleeves.

Dimensions (Inches)

Coupling Size	JEM — JEMS Sleeves			EM — E — N Sleeves			H & HS Sleeves Hytrel •		
	D	W	Wt. (lb)	D	W	Wt. (lb)	D	W	Wt. (lb)
3	1.875	1	.06	—	—	—	—	—	—
4	2.313	1.25	.10	2.313	1.25	.11	—	—	—
5	2.938	1.563	.20	2.938	1.563	.25	—	—	—
6	3.75	1.875	.35	3.75	1.875	1.0	3.75	1.875	.44
7	4.344	2.188	.50	4.344	2.188	.77	4.344	2.188	.69
8	5.063	2.5	.85	5.063	2.5	1.4	5.063	2.5	1.4
9	6	3	2.00	6	3	2.0	6	3	1.8
10	7 .063	3.438	2.20	7 .063	3.438	2.9	7 .063	3.438	3.00
11	—	—	—	8 .188	4	4.67	8 .188	4	4.70
12	—	—	—	9.563	4.688	8.1	9.563	4.688	8.00
13	—	—	—	11.188	5.5	13.0	11.188	5.5	11.8
14	—	—	—	13.094	6.5	21.1	13.094	6.5	19.3
16	—	—	—	17.906	8.75	53.0	—	—	—

• 13 & 14 Hytrel available with HS sleeves only.

Quadra-Flex® Type J Flanges

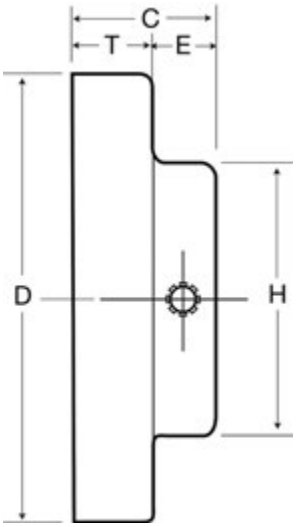

Quadra-Flex® Type J Flanges

Martin Type J Flanges are supplied bored to size with standard keyway and two setscrews to slip fit on standard shafting.

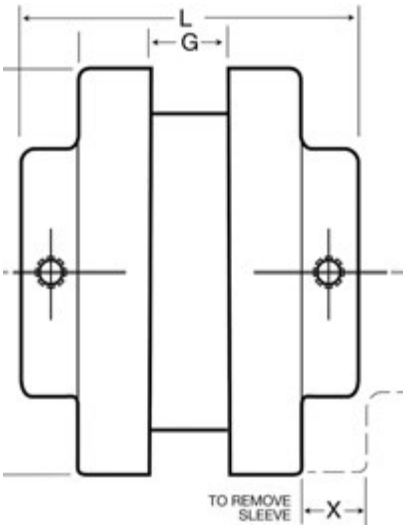

Type J Flanges use the Martin JEM 1 Piece,the Martin JEMS 1 piece split and the Martin EM 2 piece split sleeves.

(Note: Hytrel sleeves are not intended for use with this type of flange.)

Dimensions (Inches)

Coupling Size	Dimensions								Weight (lb) ★	Finished Bore Sizes • (Inches)											Max. Bore	Millimeters		
	C	D	E	G	H	L	T	X																
3J	.813	2.062	.438	.375	1.25	2	.375	.563	.26	.375**	.5	.625	.75								.75	—	—	—
	.813	2.062	.438	.375	1.5	2	.375	.563	.26					.875							.875	—	—	—
4J	.875	2.460	.438	.625	1.625	2.375	.438	.75	.47		.5	.625	.75	.875	.938	1					1	15	20	25
5J	.688	3.25	.469	.75	1.875	2.875	.594	.969	.86		.5	.625	.75	.875	.938	1	1.125				1.125	—	—	—
6J	.531	4	.594	.875	1.938	3.313	.625	1.094	1.73			.625	.75	.875	.938	1					—	—	—	—
	.531	4	.594	.875	2.5	3.313	.625	1.094	1.70								1.125	1.188	1.25	1.375	1.375	—	—	—

★ Approximate weight for each flange.
** .375" Bore has no Keyway
• J flanges can be rebored if necessary.

Type S Flanges

Quadra-Flex® Type S Couplings (Bored to Size)

Type S flexible coupling flanges are bored to size to fit on any standard shaft. They are produced from high strength cast iron. Units are easy to install and remove and are stocked in a wide range of bore sizes as shown on the next page.

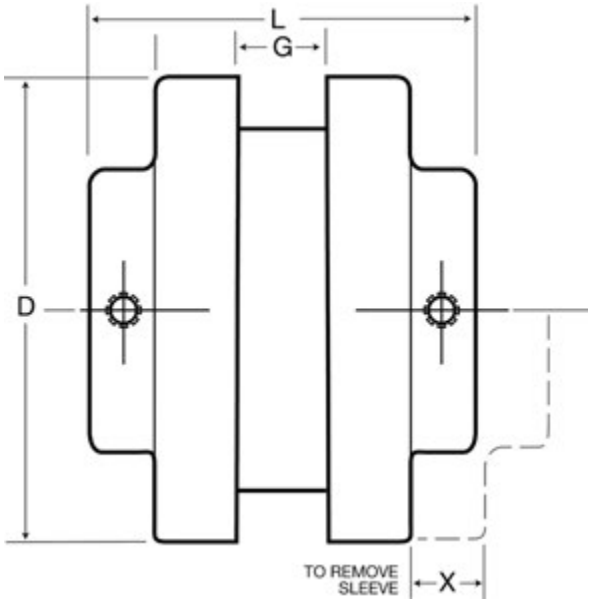

Dimensions

Coupling Size	Flange Diameter (D)	Bore (Inches)			Hub (Inches)			G	L	T	X	Weight (lb) •
		Stock	Rec. Max. ★	Rec. Max. ★★	Hub Diameter (H)	Length Thru (C)	Hub Projected (E)					
5S	3.25	.5	1.188	1.25	1.875	1.375	.453	.75	2.813	.594	.969	1.0
6S	4	.625	1.438	1.5	2.5	1.625	.531	.875	3.5	.75	1.094	2.1
	4	.625	—	1.875	2.5	1.563	.813	.875	4	.75	1.094	2.1
7S	4.625	.625	1.625	1.875	2.813	1.844	.688	1	3.938	.781	1.313	2.7
8S	5.45	.75	1.938	2.25	3.25	.719	.75	1.125	4.438	.906	1.5	4.5
	5.45	.75	—	2.375	3.25	1.938	1.031	1.125	5	.906	1.5	4.5
9S	6.35	.875	2.375	2.5	3.625	2.406	.781	1.438	5.063	1.031	1.75	6.5
	6.35	.875	—	2.875	4.125	2.281	1.25	1.438	6	1.031	1.75	6.5
10S	7.5	1.125	2.75	3.125	4.375	2.719	.813	1.625	5.688	1.219	2	11.3
	7.5	1.125	—	3.375	4.75	2.688	1.469	1.625	7	1.219	2	11.3
11S	8.625	1.25	3.375	3.625	5.25	3.438	1.125	1.875	7.125	1.5	2.375	17.6
	8.625	1.25	—	3.875	5.625	3.063	1.563	1.875	8	1.5	2.375	17.6
12S	10	1.5	3.875	3.938	5.75	4	.594	2.313	8.25	1.688	2.688	27.2
13S	11.75	2	4.5	—	6.75	4.375	.938	2.688	9.25	1.969	3.063	45.6
14S	13.875	2	5	—	7.5	4.5	.688	3.25	9.875	2.25	3.5	70.0
16S	18.875	2	5.5	6	8	6	2	4.75	14.25	2.75	4.25	162.0

★ Recommended max. bore with standard keyway.
★★ Recommended max. bore with shallow keyway. See chart on page C-18 for recommended keyway size.
• Approximate weight for each flange.

Quadra-Flex® Type S Couplings (Bored to Size)

Type S flexible coupling flanges are bored to size to fit on any standard shaft. They are produced from high strength cast iron. Units are easy to install and remove and are stocked in a wide range of bore sizes as shown on the next page.

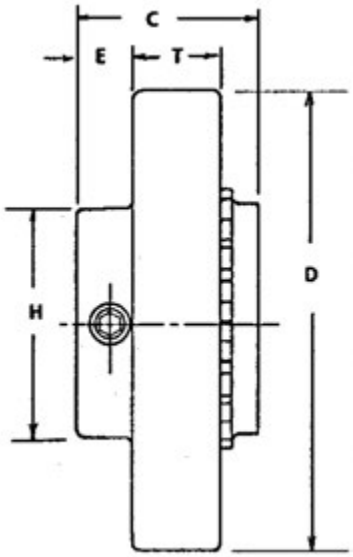

Inches / Millimeters

Coupling Size	Finished Bore Sizes Inches /mm
5S	.625, .75, .813, .875, .938, 1, 1.063, 1.125, 1.188, 1.25 15mm, 20mm, 25mm
6S	.75, .875, .938, 1, 1.063, 1.125, 1.188, 1.25, 1.313, 1.375, 1.438, 1.5, 1.625, 1.75, 1.875 20mm, 25mm, 28mm, 30mm, 35mm
7S	.75, .875, .938, 1, 1.063, 1.125, 1.188, 1.25, 1.313, 1.375, 1.438, 1.5, 1.563, 1.625, 1.688, 1.75, 1.875 25mm, 28mm, 30mm, 38mm, 42mm
8S	.875, .938, 1, 1.063, 1.125, 1.188, 1.25, 1.313, 1.375, 1.438, 1.5, 1.563, 1.625, 1.688, 1.75, 1.875, 1.938, 2.063, 2.125, 2.375 28mm, 30mm, 32mm, 38mm, 42mm, 48mm
9S	.938, 1, 1.063, 1.125, 1.25, 1.375, 1.438, 1.5, 1.563, 1.625, 1.688, 1.75, 1.875, 1.938, 2, 2.063, 2.125, 2.188, 2.25, 2.375, 2.5, 2.875 30mm, 32mm, 38mm, 42mm, 48mm
10S	1.125, 1.25, 1.375, 1.438, 1.5, 1.563, 1.625, 1.688, 1.75, 1.875, 1.938, 2, 2.063, 2.125, 2.188, 2.25, 2.375, 2.438, 2.5, 2.75, 2.875, 3.375 55mm, 60mm
11S	1.25, 1.375, 1.438, 1.563, 1.625, 1.75, 1.875, 2.063, 2.125, 2.25, 2.375, 2.625, 2.75, 2.875, 3.375, 3.875
12S	1.875, 2.125, 2.375, 2.625, 2.875, 3.375, 3.875, 3.938 90mm
13S	2.375, 2.875, 3.375
14S	2.875
16S	*

* Plain bore only.

Keyseat Dimensions

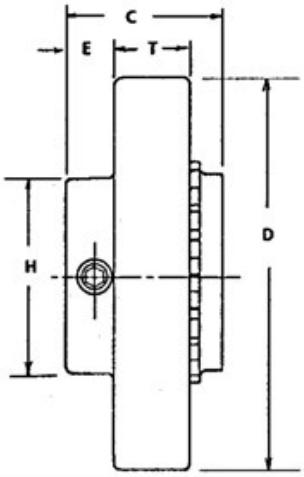

Standard Keyway Dimensions

Shaft Diameter	Width	Depth
.5 – .563	.125	.063
.625 – .875	.188	.094
.938 – 1.25	.25	.125
.938 – 1.375	.313	.156
1.438 – 1.75	.375	.188
1.813 – 2.75	.5	.25
2.313 – 2.75	.625	.313
2.813 – 3.25	.75	.375
3.313 – 3.75	.875	.438
3.813 – 4.5	1	.5
4.563 – 5.5	1.25	.625
5.563 – 6.5	1.5	.75

Bore Tolerances for Types J and S Flanges, SC Hubs

Shaft Diameter	Width
UP to 1	+.0000 to +.0010
1.063 to 2.125	+.0000 to +.0015
2.188 to 2.625	+.0000 to +.0020
2.688 to 3.688	+.0000 to +.0025
3.75 to 4.75	+.0000 to +.0030
4.813 to 6	+.0000 to +.0035

Shallow Keyseat Dimensions

Coupling Size	Hub Dia. (H)	Length Thru (C)	Shallow Keyseat Dimensions								
			Bore	Keyway	Key	Bore	Keyway	Key	Bore	Keyway	Key
6S	2.5	1.313	1.625	.375 × .125	.375 × .313 × 1.25	1.75	.375 × .063	.375 × .25 × 1.25	1.875	.5 × .063	.5 × .313 × 1.5
	2.813	1.563									
7S	2.813	1.818	1.875	.5 × .125	.5 × .375 × 1.813	–	–	–	–	–	–
8S	3.25	2.188	2.125	.5 × .188	.5 × .438 × 2.063	2.375	.625 × .125	.625 × .438 × 1.938	–	–	–
	3.25	1.938	2.125	.5 × .188	.5 × .438 × 2.063	2.375	.625 × .125	.625 × .438 × 1.938	–	–	–
9S	3.625	2.406	2.5	.625 × .188	.625 × .375 × 2.375	2.875	.75 × .125	.75 × .5 × 2.063	–	–	–
	4.125	2.281	2.5	.625 × .188	.625 × .375 × 2.375	2.875	.75 × .125	.75 × .5 × 2.063	–	–	–
10S	4.375	2.636	2.875	.75 × .25	.75 × .625 × 2.688	3.375	.875 × .188	.875 × .375 × 2.688	–	–	–
	4.75	2.688	2.875	.75 × .25	.75 × .625 × 2.688	3.375	.875 × .188	.875 × .375 × 2.688	–	–	–
11S	3.25	3.438	3.875	1 × .25	1 × .75 × 3	–	–	–	–	–	–
	4.875	3.438	3.875	1 × .25	1 × .75 × 3	–	–	–	–	–	–
	5.25	3.438	3.875	1 × .25	1 × .75 × 3	–	–	–	–	–	–
	5.625	3.063	3.875	1 × .25	1 × .75 × 3	–	–	–	–	–	–
12S	3.75	4	3.938	1 × .25	1 × .75 × 3.938	–	–	–	–	–	–
	4.875	4	3.938	1 × .25	1 × .75 × 3.938	–	–	–	–	–	–
	5.75	4	3.938	1 × .25	1 × .75 × 3.938	–	–	–	–	–	–

Type B Bushed Quadra-Flex®

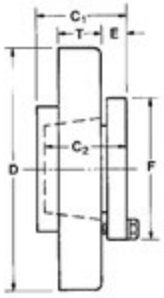

Flanges

Type B flanges are made of high quality cast iron, the same high strength cast iron used in the Type S and SC Quadra-Flex® flanges. Type B is designed to accommodate Martin QD bushings for easy installation and removal. Type B flanges are not intended for use with Hytrel sleeves

Coupling Size	Bushing Required	Dimensions									Max. Bore ★	Weight (lb) †	
		C_1	C_2	D	E	F	G	L	T	X		Flange	Bushing
6B	JA	1.531	1	4.000	.438	2	.875	3.313	.758	1.094	1.188	1.7	.9
7B	JA	1.594	1	4.625	.438	2	1	3.438	.758	1.313	1.188	2.0	1.0
8B	SH	1.818	1.25	5.450	.5	2.688	1.438	3.938	2.281	1.5	1.625	3.1	1.0
9B	SD	2.188	1-1.188	6.350	.438	3.188	1.438	4.625	1.031	1.75	1.938	4.9	1.5
10B	SK	1.818	1.875	7.500	.625	3.875	1.625	5.313	1.219	2	2.5	7.0	2.0
11B	SF	2.125	2	8.625	.625	4.625	1.875	6.125	1.5	2.375	2.75	11.8	3.0
12B	E	2.688	2.625	10.000	.875	6	2.313	7.438	1.688	2.688	3.438	17.2	10.0
13B	F	3.688	3.625	11.750	1	6.625	2.688	8.625	1.939	3	3.938	30.5	11.5
14B	F	3.688	3.625	13.875	1	6.625	3.25	9.75	2.25	3.5	3.938	51.0	11.5
16B	J	4.75	4.5	18.875	1.188	7.25	4.75	12.625	2.75	4.25	4.5	120.0	18.0

★ Maximum bore with keyseat.
† Approximate weight for each flange.

QD Bushing Keyway Dimensions

Shaft Diameter	Width	
JA	.5 - 1	STANDARD
	.688 - 1.125	.25 × .063
	.813	.25 × .063
	1.25	NO K.S.
SH	.5 - 1.375	STANDARD
	1.438 - 1.625	.375 × .063
	1.688	NO K.S.
SD	.5 - 1.688	STANDARD
	1.75	.375 × .125
	1.813	.5 × .125
	1.875 - 1.938	.5 × .063
	2	NO K.S.
SK	.5 - 2.125	STANDARD
	2.188 - 2.25	.5 × .125
	2.313 - 2.5	.625 × .063
	2.563 - 2.625	NO K.S
SF	.5 - 2.25	STANDARD
	2.313 - 2.5	.625 × .188
	2.563 - 2.75	.625 × .063
	2.813 - 2.875	.75 × .063
	2.938	.75 × 1/32
E	.875 - 2.875	STANDARD
	2.813 - 3.25	.75 × .125
	3.313 - 3.438	.875 × .063
	3.5	.875 × .063
F	1 - 3.313	STANDARD
	3.375 - 3.75	.875 × .188
	3.813 - 3.938	1 × .125
	4	NO K.S.
J	1.25 - 3.75	STANDARD
	3.813 - 3.938	1 × .125
	4 - 4.5	1 × .125

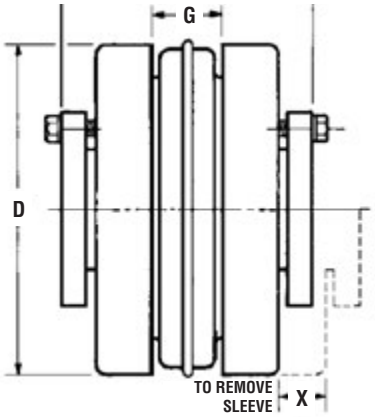

Bushings

Martin QD bushings offer convenient mounting of the flange to the shaft securely without setscrews. They are tapered and are split through both the bushing flange and taper to provide a clamp fit, eliminating wobble, vibration, and fretting corrosion. This is the same bushing used in Martin sprockets and sheaves and is readily available.

Type SC
Spacer Couplings

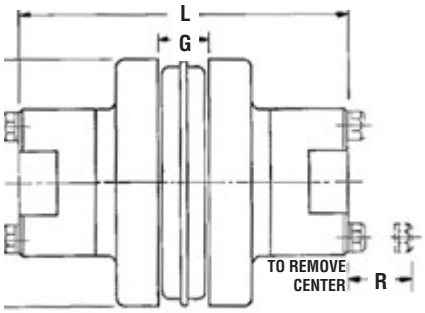

The dimensions for completely assembled Quadra-Flex® Type SC Spacer Couplings are shown below. See next page for dimensions of separate components.

Coupling Size	Required Distance Between Shafts	Use Flange Number	Use Hub Number	Max. Bore Standard Keyway	Dimensions				Weight[2] (lb) •
					D	L[2]	G	R	
4JSC	3.5	4JSC35[1]	4H	1.125	2.460	5.625	.625	.5	4.7
5SC	3.5	5SC35	5H	1.125	3.250	5.625	.75	.563	4.1
6SC	3.5	6SC35	6H	1.375	4.000	5.875	.875	.75	7.1
	4.375	6SC44	6H	1.375	4.000	6.75	.875	.75	7.9
	5	6SC50	6H	1.375	4.000	7.375	.875	.75	8.5
7SC	3.5	7SC35	7H	1.625	4.625	6.375	1	.625	9.1
	4.375	7SC44	7H	1.625	4.625	7.25	1	.625	10.1
	5	7SC50	7H	1.625	4.625	7.875	1	.625	10.7
8SC	3.5	8SC35	8H	1.875	5.450	6.875	1.125	.813	14.7
	3.5	8SC35-10	10H★	2.375	5.450	8.125	1.125	.813	22.7
	4.375	8SC44	8H	1.875	5.450	7.75	1.125	.813	16.1
	5	8SC50	8H	1.875	5.450	8.375	1.125	.813	15.9
	5	8SC50-10	10H★	2.375	5.450	9.625	1.125	.813	26.5
9SC	3.5	9SC35	9H★	2.125	6.350	7.5	1.438	.688	22.0
	4.375	9SC44	9H★	2.125	6.350	8.25	1.438	.688	23.4
	5	9SC50	9H★	2.125	6.350	8.875	1.438	.688	24.6
	5	9SC50-11	11H★	2.875	6.350	10.375	1.438	.813	40.2
	7	9SC70-11	11H★	2.875	6.350	12.375	1.438	.813	48.2
	7.75	9SC78-11	11H★	2.875	6.350	13.125	1.438	.813	50.8
10SC	4.75	10SC48	10H★	2.375	7.500	9.375	1.625	.813	35.4
	5	10SC50	10H★	2.375	7.500	9.625	1.625	.813	38.2
	7	10SC70-13	13H★	3.375	7.500	13.625	1.625	1.875	71.8
	7.75	10SC78-13	13H★	3.375	7.500	14.375	1.625	1.875	75.6
	10	10SC100-13	13H★	3.375	7.500	16.625	1.625	1.875	89.0
11SC	4.75	11SC48	11H★	2.875	8.625	10.625	1.875	.813	54.5
	5	11SC50	11H★	2.875	8.625	10.375	1.875	.813	54.8
	7	11SC70-14	14H	3.875	8.625	14.625	1.875	2	85.7
	7.75	11SC78-14	14H	3.875	8.625	15.375	1.875	2	90.1
	10	11SC100-14	14H	3.875	8.625	17.625	1.875	2	102.5
12SC	7	12SC70	12H★	2.875	10.000	12.875	2.313	1.5	87.7
	7	12SC70-14	14H	3.875	10.000	14.625	2.313	2	98.9
	7.75	12SC78	12H★	2.875	10.000	13.625	2.313	1.5	91.5
	7.75	12SC78-14	14H	3.875	10.000	15.375	2.313	2	103.3
	10	12SC100-14	14H	3.875	10.000	17.625	2.313	2	115.5
13SC	7.75	13SC78	13H★	3.375	11.750	14.375	2.688	1.875	121.8
14SC	7.75	14SC78	14H	3.875	13.875	15.375	3.25	2	179.4

★ Short (HS) hub also available.
• Approximate weight for completely assembled spacer coupling.
[1] 4JSC35 × 1.125 has a shallow keyway.
[2] "L" dimension and weight will change if one or two short (HS) hubs are used.
NOTE: Refer to page C-23 to order — specify components separately.

Type SC Flanges and Hubs

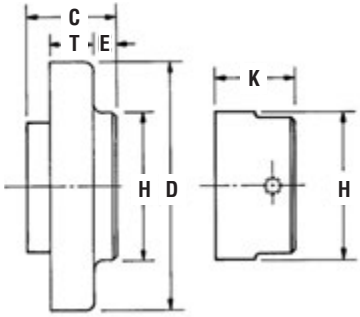

Type SC Flanges and Hubs

Tables below provide dimensional information for Quadra-Flex® Flanges and Hubs used for Spacer Couplings. Assembled dimensions are listed on opposite page. Any of the sleeves shown on page C-14 can be used.

Coupling Size	Flange Number	For Distance Between Shafts ★	For Hubs	Dimensions					Weight (lb) •
				D	E	H	C	T	
4JSC	4JSC35	3.5	4H	2.460	.438	2	.875	.438	1.2
5SC	5SC35	3.5	5H	3.250	.797	2	1.688	.594	1.2
6SC	6SC35	3.5	6H	4.000	.594	2.5	1.625	.697	2.0
	6SC44	4.375	6H	4.000	.344	2.5	2.063	.697	2.4
	6SC50	5	6H	4.000	1.344	2.5	2.375	.697	2.7
7SC	7SC35	3.5	7H	4.625	.469	2.813	1.625	.758	2.3
	7SC44	4.375	7H	4.625	.879	2.813	2.063	.758	2.8
	7SC50	5	7H	4.625	.531	2.813	2.375	.758	3.1
8SC	8SC35	3.5	8H	5.450	.281	3.25	1.625	.879	3.5
	8SC35-10	3.5	10H-10HS	5.450	.281	4.375	1.625	.879	3.4
	8SC44	4.375	8H	5.450	.697	3.54	2.063	.879	4.2
	8SC50	5	8H	5.450	.344	3.25	2.375	.879	4.6
	8SC50-10	5	10H-10HS	5.450	.344	4.375	2.375	.879	5.3
9SC	9SC35	3.5	9H-9HS	6.350	.063	3.625	1.688	.344	5.1
	9SC44	4.375	9H-9HS	6.350	.438	3.625	2.063	.344	5.8
	9SC50	5	9H-9HS	6.350	.75	3.625	2.375	.344	6.4
	9SC50-11	5	11H-11HS	6.350	.75	5.25	2.375	.344	6.9
	9SC70-11	7	11H-11HS	6.350	1.75	5.25	3.375	.344	10.9
	9SC78-11	7.75	11H-11HS	6.350	2.125	5.25	3.75	.344	12.1
10SC	10SC48	4.75	10H-10HS	7.500	.344	4.375	2.25	.531	9.8
	10SC50	5	10H-10HS	7.500	.469	4.375	2.375	.531	10.1
	10SC70-13	7	13H-13HS	7.500	1.469	6.125	3.375	.531	14.5
	10SC78-13	7.75	13H-13HS	7.500	1.818	6.125	3.75	.531	16.3
	10SC100-13	10	13H-13HS	7.500	2.939	6.125	4.875	.531	22.5
11SC	11SC48	4.75	11H-11HS	8.625	.031	5.25	1.5	1.5	12.5
	11SC50	5	11H11HS	8.625	.063	5.25	1.563	1.5	12.7
	11SC70-14	7	14H	8.625	.688	6.5	2.563	1.5	16.1
	11SC78-14	7.75	14H	8.625	1.438	6.5	2.938	1.5	18.3
	11SC100-14	10	14H	8.625	2.563	6.5	4.063	1.5	24.5
12SC	12SC70	7	12H-12HS	10.000	.636	5.75	2.469	1.688	23.2
	12SC70-14	7	14H	10.000	.636	6.5	2.469	1.688	21.2
	12SC78	7.75	12H-12HS	10.000	.344	5.75	2.818	1.688	25.1
	12SC78-14	7.75	14H	10.000	.344	6.5	2.818	1.688	23.4
	12SC100-14	10	14H	10.000	.758	6.5	3.939	1.688	29.5
13SC	13SC78	7.75	13H-13HS	11.750	.563	6.125	3.25	1.939	38.4
14SC	14SC78	7.75	14H	13.875	.031	6.5	2.697	2.25	55.0

★ Flanges can be mixed to form different Between-Shaft Dimensions. See chart on page 23.

• Approximate weight for each flange.

SC Spacer Hub Bores

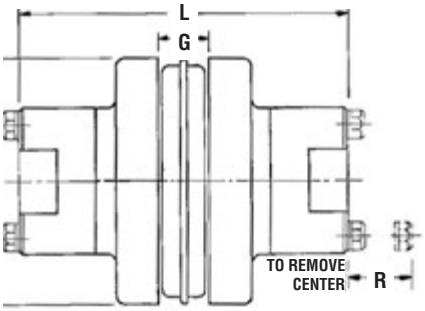

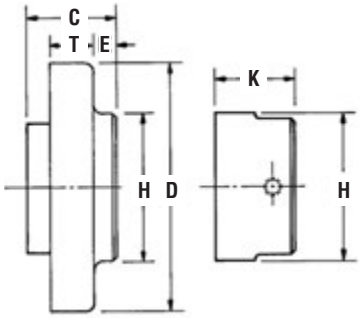

Coupling Size	Hub Number	Max. Bore	Stock Bore									Dimensions			Weight[2] (lb) •
			Plain Bore									K	H	Cap Screws Furnished	
4JSC	4H	1.125	–	.625	.875	1	1.125H					1.625	2	4 — 10 × 2	1.1
5SC	5H	1.125	.5	.625	.75	.875	1	1.125				.406	2	4 — 10 × 1.5	.7
6SC	6H	1.375	.625	.75	.875	1	1.125	1.25	1.375			.531	2.5	4 — .25 × 1.75	1.3
7SC	7H	1.625	.625	.875	1	1.125	1.375	1.5	1.625			1.469	2.813	4 — .25 × 1.875	1.9
8SC	8H	1.875	.75	.875	1	1.125	1.375	1.5	1.625	1.75	1.875	1.697	3.25	4 — .313 × 2.25	3.2
9SC	9H	2.125	.875	1	1.125	1.375	1.5	1.625	1.75	1.875	2.125	1.939	3.625	4 — .375 × 2.75	4.4
	9HS	1.5	–	1.125								1.531	3.625	4 — .375 × 2.25	3.7
10SC	10H	2.375	1.125	1.625	1.875	2.125	2.375					2.344	4.375	4 — .438 × 3	7.3
	10HS	1.625	–	1.125								1.636	4.375	4 — .438 × 2.5	5.5
11SC	11H	2.875	1.125	1.875	2.125	2.375	2.875					2.697	5.25	4 — .5 × 3.5	12.2
	11HS	1.875	–	1.125	1.625							1.879	5.25	4 — .5 × 2.75	9.3
12SC	12H	2.875	1.875	1.875	2.125	2.375	2.875					2.939	5.75	4 — .625 × 4	16.6
	12HS	2.5	–	2.375								2.531	5.75	4 — .625 × 3.5	14.1
13SC	13H	3.375	–	2.375	2.875	3.375						3.344	6.125	4 — .625 × 4.75	19.9
	13HS	2.5	–	2.125	2.375							2.469	6.125	4 — .625 × 3.5	16.0
14SC	14H	3.875	–	2.375	2.875	3.375	3.875					3.818	6.5	4 — .625 × 5	24.2

★ 4JSC × 1.125 has a shallow keyseat.
• Approximate weight for each hub.

Between-Shaft Spacings

Type B Bushed Quadra-Flex®

Spacer couplings are available with the most popular between shaft dimensions. Spacings other than standard can be achieved by mixing flanges.

The “Standard” column provides spacings using identical flanges; the “Combination” column provides spacings with mixed flanges; the column headed “Semi-Spacer” uses one flange that is not made for spacer coupling and therefore does not have a detachable hub.

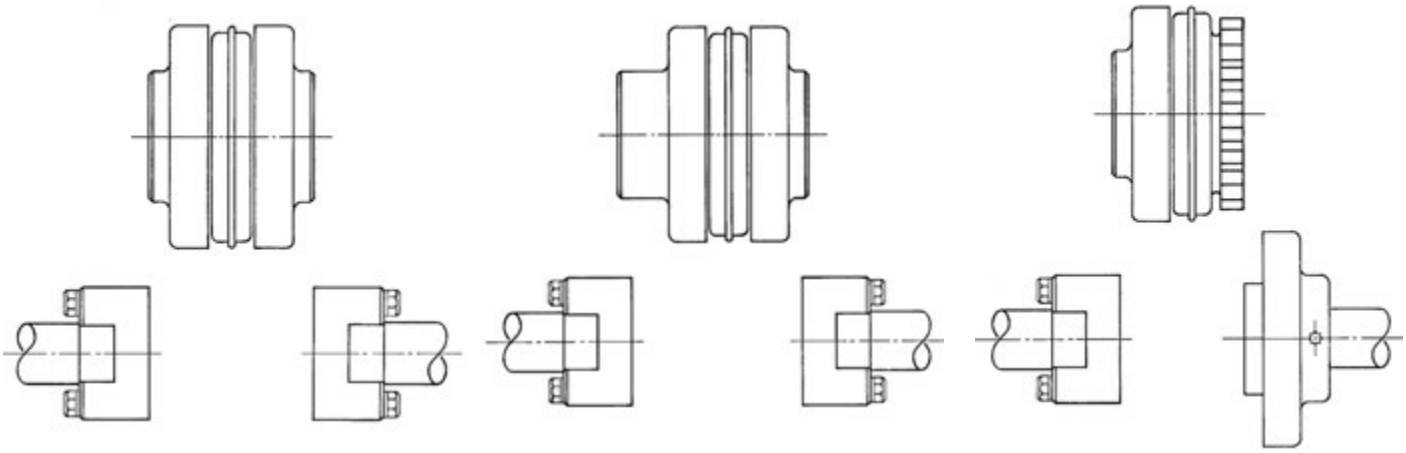

Standard

Spacing	Use Flanges ★
3.5	2 - ( ) SC35
4.375	2 - ( ) SC44
5	2 - ( ) SC50
7	2 - ( ) SC70
7.75	2 - ( ) SC78
10	2 - ( ) SC100

Combination

Spacing	Use Flanges ★
3.938	SC35 and SC44
4.25	SC35 and SC50
4.688	SC44 and SC50
5.25	SC35 and SC70
5.625	SC35 and SC78
5.688	SC44 and SC70
6	SC50 and SC70
6.063	SC44 and SC78
6.375	SC50 and SC78
6.75	SC35 and SC100 ★★
7.188	SC44 and SC100 ★★
7.375	SC70 and SC78
7.5	SC50 and SC100
8.5	SC70 and SC100
8.875	SC78 and SC100

Semi-Spacer

Spacing	Use Flanges ★
1.875	S and SC35
2.313	S and SC44
2.625	S and SC50
3.625	S and SC70
4	S and SC78
5.125	S and SC100

★ Check individual coupling size for flange
★★ Non-Stock
Note: Other combinations available – consult factory

Installation Instructions

Martin Quadra-Flex® flanges (hubs) and elastomeric elements (sleeves) come in a wide range of sizes and types. First, determine the size and type of coupling components required. Remove all components from their boxes and loosely assemble the coupling. Do not install the wire ring on the two piece sleeves at this time. Check maximum RPM values in table against operating speeds.

Martin EM sleeves are rated the same as other EPDM and Neoprene sleeves, and may be used interchangeably; however, Hytrel sleeves are rated at different values and may not be interchanged with Martin EM sleeves, or the EPDM and Neoprene sleeves. Check horsepower and torque ratings when selecting Hytrel sleeves.

Step 1. Make sure the motor driving the part or components is locked out electrically in such a manner that it cannot be started by anyone, however remote from the area. The same type of lockout procedure applies to any other driving device which may be used. Failure to follow these instructions may result in personal injury or property damage.

Step 2. Prepare shafts for coupling installation. Inspect all coupling components and remove any protective coating or lubricants from bores, mating surfaces, and fasteners.

Step 3. Slide one coupling flange onto each prepared shaft using key stock where required. With the QD Type B flange, it may be necessary to expand the QD bushing bore for ease of installation.

Step 4. Position the flange on the shafts to achieve the approximate "Y" dimension (distance between flanges) shown in table. It is best to have equal shaft length into each flange. Tighten one flange in position, and slide the other flange sufficient distance back to install sleeve. Do not install wire ring on two piece sleeve in its final position at this time, but allow it to hang loosely in groove next to teeth.

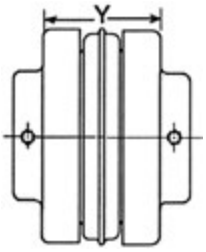

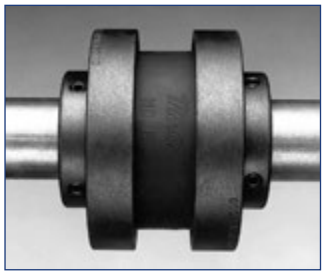

Step 5. Slide loose flange on the shaft until the sleeve has seated completely in teeth of both flanges. Refer to "Y" dimension although not a critical dimension. Secure the flange to shaft and torque set screws and cap screws to correct torque values.

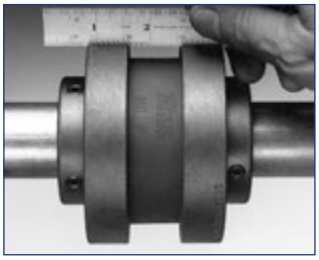

Parallel

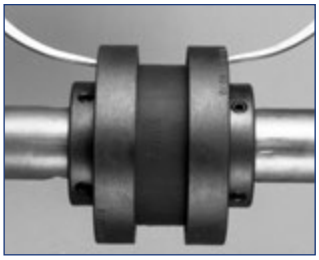

Angular

Step 6. Check parallel alignment by placing a straight edge across the two coupling flanges and measure the maximum offset at several points around the periphery of coupling. Do not rotate coupling when taking these measurements. Refer to table for maximum allowed offset of parallel alignment. Realign the coupling if necessary.

Step 7. Check angular alignment with a micrometer, vernier, or caliper. Take measurement from outside to outside of flanges at several points around the periphery of coupling. Do not rotate coupling when taking these measurements. Determine the difference between maximum and minimum dimensions and check to make sure they do not exceed the angular figure on the table. If a correction is necessary, recheck parallel alignment.

Maximum RPM and Allowable Misalignment
(Dimensions in Inches)

Sleeve Size	Max. RPM	Types JEM, EM, E and N			★ Type H and HS		
		Parallel	Angular	Y	Parallel	Angular	Y
3	9200	.010	.035	1.188	—	—	—
4	7600	.010	.043	1.500	—	—	—
5	7600	.015	.056	1.938	—	—	—
6	6000	.015	.070	2.438†	.010	.016	2.500
7	5250	.020	.081	2.563	.012	.020	2.625
8	4500	.020	.094	2.938	.015	.025	3.000
9	3750	.025	.109	3.500	.017	.028	3.563
10	3600	.025	.128	4.053	.020	.032	4.125
11	3600	.032	.151	4.875	.022	.037	4.938
12	2800	.032	.175	5.688	.025	.042	5.750
13	2400	.040	.195	6.688	.030	.050	6.688
14	2200	.045	.242	7.750	.035	.060	7.813
16	1500	.062	.330	10.250	—	—	—

NOTE: Values shown above may apply if the actual torque transmitted is more than .25 the coupling rating. For lesser torque, reduce the above values by .5.

★ Type H & HS sleeves should not be used as direct replacements for JEM or EM sleeves.

† Value when using 6J flanges is 2.125.

Step 8. If the coupling employs the two-piece sleeve with wire ring, install ring in center groove of sleeve.

Note: Some force may be required to seat the ring in groove.

Step 9. Install protective guards and/or shields per OSHA and any other additional local or state safety codes as required.

Warning: Coupling sleeves may be forced from coupling when subjected to a severe shock load or abuse.

Stock Flexible Couplings

Type TBH

Type TBF

Bored to Size
and Stock Bore

QD

Covers

Stock Flexible Couplings

Bored to Size Couplings with Finished Bore, Keyway, and Set Screw

Coupling Number	Stock Finished Bores Include Standard Keyway and Setscrew	A	B	C	L	Coupling O.D.	Weight (lb)
4012	.5, .625, .75	1.406	1.125	.281	2.531	2.406	.4
4016	.625, .75, .875, .938, 1, 1.125, 1.188, 1.25	1.969	1.125	.281	2.531	3.031	.8
5016	.75, .875, 1, 1.125, 1.188, 1.25, 1.375, 1.438, 1.5, 1.625	2.5	1.438	.375	3.25	3.781	1.6
5018	.75, .875, 1, 1.125, 1.188, 1.25, 1.375, 1.438, 1.5, 1.625, 1.75, 1.875, 1.938	2.969	1.688	.375	3.75	4.188	2.4
6018	1, 1.125, 1.188, 1.25, 1.375, 1.438, 1.5, 1.625, 1.75, 1.875, 1.938, 2, 2.125, 2.188, 2.25, 2.375, 2.438	3.5	1.875	.438	4.188	5	4.8
6020	1.125, 1.25, 1.5, 1.75, 1.938, 2.125, 2.375, 2.438, 2.625	3.875	2	.438	4.438	5.5	5.2
6022	1.125, 1.75, 1.875, 1.938, 2.125, 2.375, 2.438, 2.625, 2.75, 2.875	4.5	2.125	.438	4.688	5.953	7.8
8018	1.125, 1.75, 1.938, 2, 2.125, 2.375, 2.438, 2.625, 2.875, 2.938	4.563	2.375	.578	5.328	6.656	9.5
8020	1.5, 2.188, 2.438, 2.688, 2.938, 3.125, 3.375, 3.438	5.375	2.625	.578	5.516	7.297	13.4
10018	1.5, 2.438, 2.875, 2.938, 3.438	5.688	2.75	.719	6.219	8.328	18.2
10020	2, 3.375, 3.688, 3.938	6.719	3.125	.719	6.969	9.125	25.0
12018	3.438, 3.938, 4.438	6.75	3.5	.859	7.875	10	28.0
12022	4.375, 4.438, 4.938	8.75	4	.859	8.875	11.891	55.0

CAUTION: All rotating power transmission products are potentially dangerous and must be properly guarded for the speeds and applications for which they were intended.

QD Couplings

Coupling Number	Bushing Used	Max. Bore★★	A	B	D	C	L	Coupling O. D.	K†	Weight (lb)
4016JA	JA	1	2	.875	1.313	.281	2.906	3.031	1.25	.9
5018SH	SH	1.375	2.969	1	1.5	.375	3.375	4.188	1.75	1.3
6020SK	SK	2.125	3.875	1.25	1.875	.438	4.188	5.5	2.25	2.5
8018SF	SF	2.313	4.563	1.75	2.375	.578	5.328	6.656	2.25	5.3

★★ Maximum bore shown is the maximum bore with standard keyway. It is recommended that this maximum not be exceeded in both halves of a coupling.
† Minimum clearance required to remove the coupling half by using the screws as jack screws.

Taper Bushed Couplings Type TBH and TBF

Type TBH	Type TBF	Bushing Data			A	B	C	J★	K†	L	OD	Weight (lb)
Coupling Number	Coupling Number	Bushing Used	Max. Bore	Min. Bore								
4016TBH	4016TBF	1108	1.125	.5	1.969	.875	.281	.625	.75	2.031	3.031	.9
5018TBH	5018TBF	1610	1.625	.5	2.969	1	.375	.813	1.167	2.375	4.188	1.1
6020TBH	6020TBF	2012	2	.5	3.875	1.25	.438	.938	1.375	2.938	5.5	2.7
8020TBH	8020TBF	3020	3	.938	5.375	2	.578	1.188	2.167	4.578	7.297	6.1
10020TBH	10020TBF	3535	3.5	1.188	6.719	3.5	.719	2	2.625	7.719	9.125	19.0

★★ Space needed for (1) tightening bushing with shortened hex key (2) loosening screws for puller to remove hub.
† Minimum clearance required to remove the coupling half by using the screws as jack screws with shortened hex key.

Our High-Speed Standard Covers Fit These Couplings

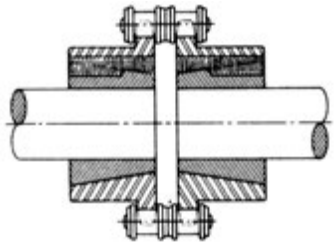

HH

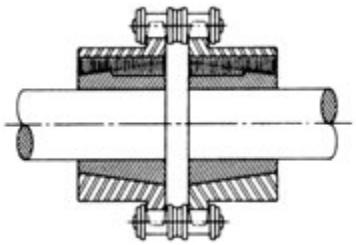

FF

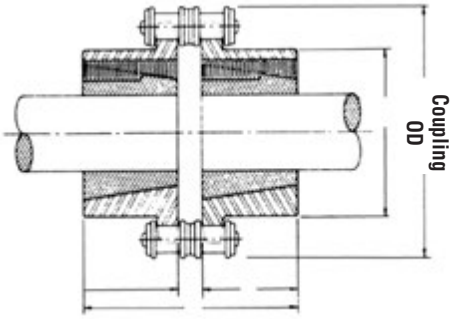

FH

Stock Flexible Couplings

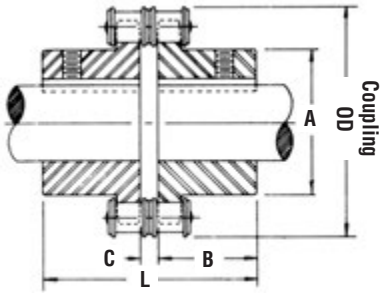

BS Coupling

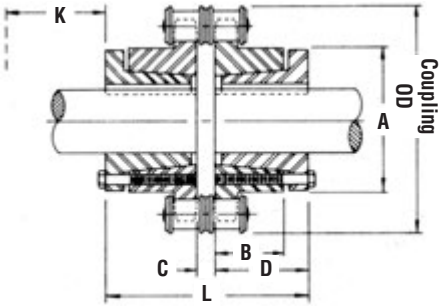

QD Coupling

Type TBF

Type TBH

All Martin chain couplings have hardened teeth

Coupling Selection

Roller chain couplings have a torque capacity in excess of the torque normally transmitted by shafting which falls within the coupling bore range. Select the smallest coupling which will accommodate both shafts. For a reversing operation, shock or pulsating loads, or other severe operating conditions, select the next larger coupling size.

A cover should be used to assure maximum service life, particularly if the coupling operates at high speeds or under moist conditions. For proper lubrication, fill the space between the cover and the coupling with soft to medium consistency coupling grease.

Coupling with Plain Bores for Reboring

Coupling Number	Maximum Bore Inches	Minimum Plain Bore Inches	Weight (lb)	Recommended Maximum RPM	Coupling Chain Number	Weight (lb)
4012	.875	.438	.5	5000	4012 CHN	.4
4016	1.313	.625	1.0	5000	4016 CHN	.5
5016	1.688	.625	2.2	4000	5016 CHN	1.2
5018	2	.75	3.5	3600	5018 CHN	1.3
6018	2.438	1	5.0	3000	6018 CHN	2.2
6020	2.75	1.125	6.5	2500	6020 CHN	2.6
6022	3	1.125	9.4	2500	6022 CHN	2.7
8018	3.125	1.125	11.0	2000	8018 CHN	5.3
8020	3.563	1.5	16.3	2000	8020 CHN	5.9
10018	3.875	1.5	20.3	1800	10018 CHN	9.8
10020	4.625	1.5	31.8	1800	10020 CHN	10.9
12018	4.688	2	36.8	1500	12018 CHN	17.3
12022	6.125	2	70.0	1200	12022 CHN	21.2

Stock Coupling Covers

Covers Fit Taper Bushed, QD and Stock, and Finished Bore Couplings. Covers allow excellent lubrication, and their use is recommended to obtain maximum coupling life. Covers are of aluminum or plastic, and are made in halves for easy installation. Synthetic rubber oil seals, which contact the coupling hubs, retain the lubricant and prevent the entry of dirt. Covers are fitted with gaskets between the halves.

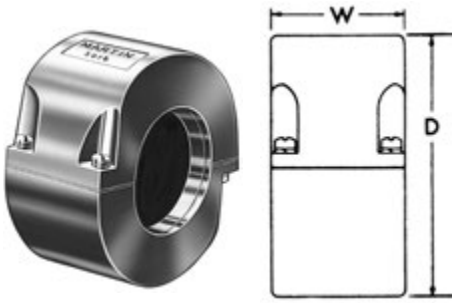

Aluminum and Plastic

Cover Cat. No.	Aluminum		Plastic		Weight (lb)
	D	W	D	W	
4012COV**	4	2	4	2.313	0.78
4016COV**	4	2	4	2.313	0.92
5016COV**	5.125	2.375	5.125	2.625	1.3
5018COV**	5.125	2.375	5.125	2.625	1.3
6018COV**	6.375	2.938	6.375	3.167	2.44
6020COV**	6.375	2.938	6.375	3.167	2.44
6022COV*	8.188	4	8.188	4	4.88
8018COV	8.188	4	8.188	4	4.88
8020COV	8.188	4	8.188	4	4.88
10018COV	9.375	5.938	9.375	5.938	8.76
10020COV	10.125	5.25	10.125	5.25	12.66
12018COV	11.375	7.375	11.375	7.375	16.46
12022COV	13.25	7.938	13.25	7.938	19.5

* Use 8018 cover — Special Seals Available
** Furnished in Plastic unless specified with "AL" Suffix when ordering.

Flexible Jaw Couplings

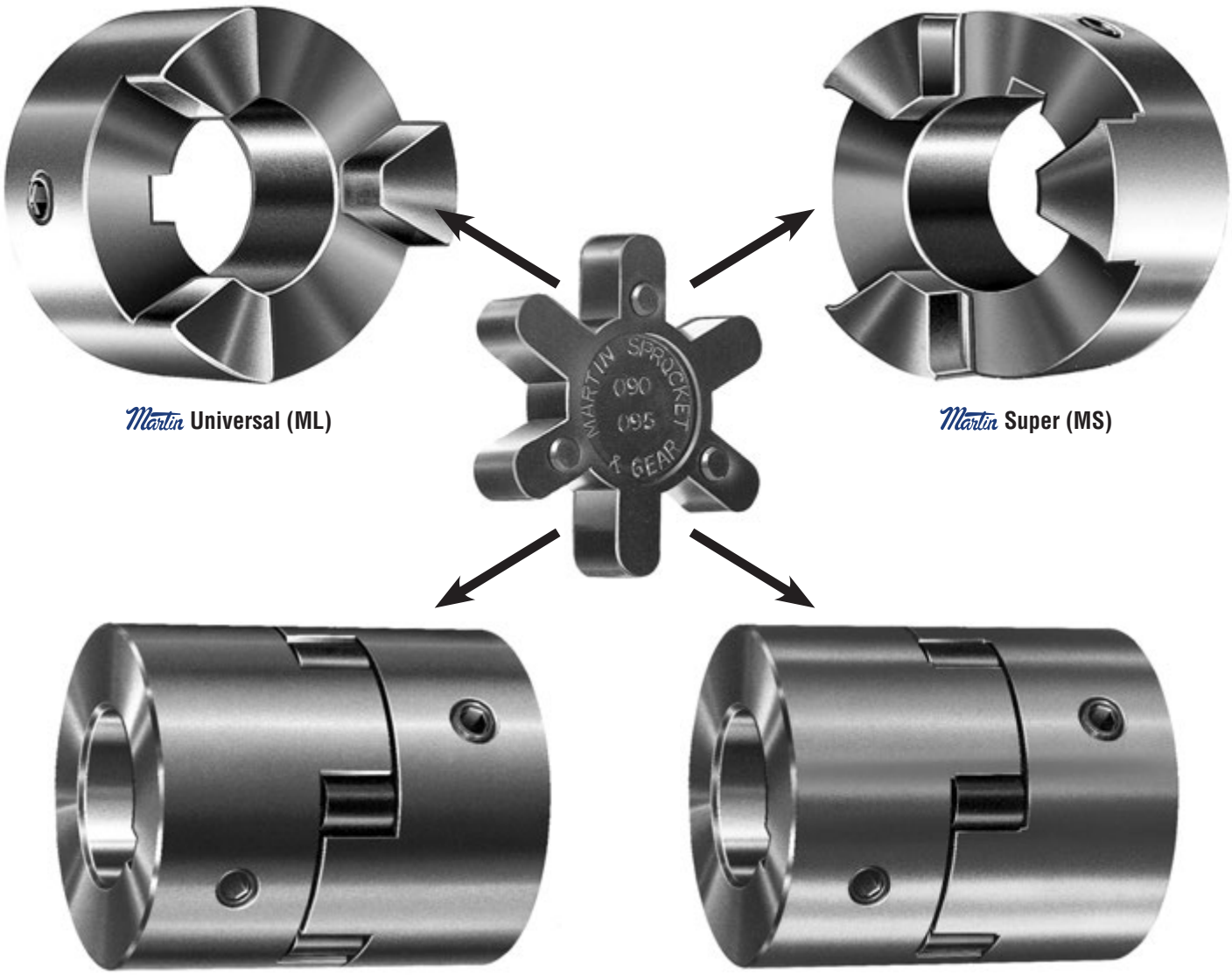

Martin Universal (ML)

Martin Super (MS)

Now Martin Offers Two Styles

The Martin Super — Higher Horsepower

The Martin Universal — Completely Interchangeable

- No Lubrication
- Easy Installation
- No Metal to Metal Contact
- Resistant to oil, dirt, sand, moisture, grease
- Easy inspection of load carrying Spider
- Flexibility of angular or parallel misalignment of shafts by Buna-N Spider member permits smooth “Power Transmission”

Jaw Coupling Selection Procedure

A. Determine Service Factor by Matching Driven Unit with Prime Mover in Service Factor Guide.
B. Multiply Service Factor by Driven Unit or Motor HP to Obtain Adjusted HP.
C. Select Flexible Coupling with Horsepower Capacity Equal to or Greater than Adjusted HP.

Service Factor Guide	Prime Mover		
Driven Unit (Machinery)	Electric Motor or Steam Turbine	Gasoline or Diesel Engine, 6 or More Cyl.	Gasoline or Diesel Engine, Less Than 6 Cyl.
Light: Uniform or steady load never exceeding horsepower rating, infrequent starting. Agitators, Blowers, Conveyors, Evaporators, Fans, Generators, Centrifugal Pumps, Stokers	1.0	1.5	2.0
Moderate: Heavy inertia, moderate shock, frequent starting; peak loads do not exceed 125 per cent average horsepower. Uneven load. Beaters, Rotary Pumps and Compressors, Cranes, Elevators, Mine and Propellor Fans, Generators, Pulp Grinders, Hoists, Kilns, Machine Tools, Mixers, Gear Pumps, Woodworking Machines	1.5	2.0	2.5
Heavy: Heavy shock conditions or frequent reversing. Peak loads do not exceed 150 per cent average horsepower. Uneven load. Reciprocating Pumps and Compressors, Crushers, Freight and Passenger Elevators, Mills (Hammer, Ball, Rolling, Turf, Flour), Vibrating Screens, Winches, Wire Drawing Machines, Punches, Shears	2.0	2.5	3.0

Bore Tolerances:
0.5 – 1.75 + 0.001 – 0.000
1.8125 – 2.625 + 0.0015 – 0.0000

Martin ML (Universal Series) — Torque and Horsepower Ratings

Catalog Number	Stainless Steel Catalog Number	Torque Rating lb — in		Buna-N Horsepower Capacity at Various RPM					Max. Bore	(Each) Weight
		Buna-N	Hytrel®	100	300	1200	1800	3600		
ML035	ML035SS	3.5	–	0.006	0.02	0.07	0.10	0.20	0.375	0.10
ML050	ML050SS	31.5	94.5	0.05	0.15	0.60	0.9	1.8	0.625	0.15
ML070	ML070SS	42	126	0.07	0.21	0.84	1.2	2.5	0.750	0.31
ML075	ML075SS	81	242	0.13	0.39	1.56	2.3	4.7	0.875	0.45
ML090	ML090SS	140	420	0.22	0.66	2.64	4.0	7.9	1.125	0.75
ML095	ML095SS	189	567	0.30	0.90	3.6	5.4	10.8	1.125	0.89
ML099	ML099SS	290	870	0.46	1.4	5.5	8.3	16.6	1.375	1.02
ML100	ML100SS	416	1248	0.66	2.0	7.9	11.9	23.8	1.375	1.48
ML110	ML110SS	756	2268	1.2	3.6	14.4	21.6	43.2	1.625	3.18
ML150	ML150SS	1197	3591	1.9	5.7	22.8	34.2	68.4	1.875	4.83
ML190	ML190SS	1512	4536	2.4	7.2	28.8	43.2	86.4	2.125	7.65
ML225	ML225SS	2268	6804	3.6	10.8	43.2	64.8	129.6	2.625	10.66

Martin MS (Super Series) — Torque and Horsepower Ratings

Catalog Number	Torque Rating lb — in		Buna-N Horsepower Capacity at Various RPM					Max. Bore	(Each) Weight
	Buna-N	Hytrel®	100	300	1200	1800	3600		
MS050	37.3	112	0.06	0.18	0.71	1.0	2.1	0.625	0.13
MS070	59.4	178	0.09	0.28	1.1	1.7	3.4	0.750	0.25
MS075	157	471	0.25	0.75	3.0	4.5	8.9	0.875	0.53
MS090	241	723	0.38	1.1	4.6	6.9	13.7	1.125	0.58
MS095	241	723	0.38	1.1	4.6	6.9	13.7	1.125	0.70
MS099	512	1536	0.81	2.4	9.7	14.6	29.2	1.325	1.12
MS100	512	1536	0.81	2.4	9.7	14.6	29.2	1.325	1.43
MS110	1014	3042	1.6	4.8	19.3	28.9	57.8	1.325	3.24
MS150	1630	4890	2.6	7.7	31.0	46.5	93.0	1.875	4.76
MS190	2450	7350	3.9	11.6	46.6	69.9	139.7	2.125	7.66
MS225	2920	8760	4.6	13.9	55.5	83.2	166.5	2.625	10.76

NOTE: Above HP capacities are for Buna-N rubber spider and service factor of one. When Hytrel spider is used multiply capacities by three.
Misalignment Capacities: Angular up to 1°, Parallel up to .015 inches.
Hytrel is a registered trademark of E.I. DuPont & Co.

Stock Jaw Couplings

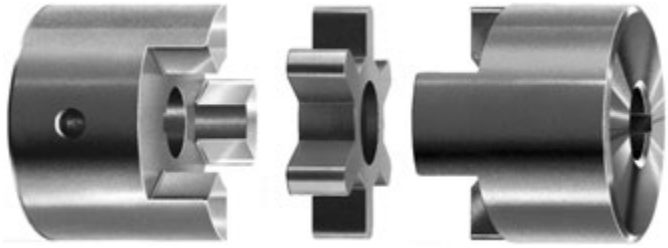

Coupling Half Spider Coupling Half

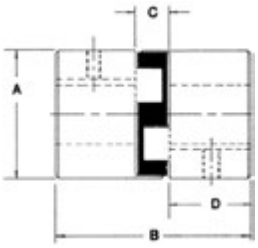

Dimensions

Catalog Number	Hub Dia.	Overall Length	Distance Between Flanges	Length Thru Bore	Bore		Weight (lb)
	A	B	C	D	Min.	Max.	
ML035	.625	.813	.281	.266	.125	.375	.07
ML or MS050	1.167	1.719	.469	.625	.25	.625	.13
ML or MS070	1.375	2	.5	.75	.25	.75	.25
ML or MS075	1.75	2.125	.5	.813	.25	.875	.44
ML or MS090	2.125	2.125	.5	.813	.25	1.125	.69
ML or MS095	2.125	2.5	.5	1	.438	1.125	.84
ML or MS099	2.531	2.875	.75	1.067	.5	1.375	1.19
ML or MS100	2.531	3.5	.75	1.375	.438	1.375	1.47
ML or MS110	3.313	4.25	.875	1.688	.5	1.625	3.20
ML or MS150	3.75	4.5	1	1.75	.625	1.875	4.50
ML or MS190	4.5	4.875	1	1.938	.75	2.125	8.25
ML or MS225	5	5.375	1	2.188	.75	2.625	12.00

Bore sizes are standard in .0625" increments from minimum to maximum bore range and have keyway and set screw except as shown below:
.125 through .375 Bore — No KW — No SS
#050 — .438 through .625 Bore — No KW — 1-SS
#070, 075, 090, 095 — .438 and .5 Bore — No KW — 1-SS
#099, 100, 110 — .5 Bore — No KW — No SS
#150 — .625 Bore — No KW — No SS
#190, 225 — .75 Bore — No KW — No SS
NOTE: In each coupling size a min. plain bore is available that can be used to make special bores such as spline, hex, metric, or other shapes or sizes.
For Standard Keyway sizes see Martin Catalog, page E-158 and E-159.

Coupling Selection Chart for 60 Hz Nema Motor Frames Based on Buna-N (Rubber) Spider ★†

Shaft Dia.	Nema Frame	Coupling Size	Max. HP @ RPM					
			1140		1725		3450	
			MS	ML	MS	ML	MS	ML
.375	42	050	.5	.5	1	.75	2	1.5
.5	48	050	.5	.5	1	.75	2	1.5
.625	56,56 H	050	.5	.5	1	.75	2	1.5
.75	66	070	1	.75	1.5	1	3	2
.875	56HZ, 143T, 145T	075	2	1	3	2	7.5	3
	182, 184	090	3	2	5	3	10	7.5
1.125	182T, 184T, 213	095	3	3	5	5	10	10
	215	099	7.5	5	10	7.5	25	15
1.375	213T, 215T, 245U, 256U	100	7.5	7.5	10	10	25	20
1.625	254T, 256T, 248U, 286U	110	15	10	25	20	50	40
1.875	284T, 286T, 324U, 326U, 326TS	150	30	20	40	30	75	60
2.125	324T, 326T, 364U, 365U	190	40	25	60	40	125	75
2.375	364T, 365T	225	50	40	75	60	150	100

NOTE: Coupling Sizes are based on the rated torque, max. bore and a have a service factor of 1.0.
★ When using Hytrel or Bronze spider multiply above horsepower ratings by 3.
† When using Urethane spider multiply above horsepower ratings by 1.5.

Spiders – Buna-N (Rubber) and Hytrel

Catalog Number		Accommodates Coupling	Net Weight lb	
Buna-N	Hytrel		Buna-N	Hytrel
SRL035	—	ML035	.009	—
SRL050	SHL050	M 050 — MS 050	.013	.013
SRL070	SHL070	ML070 — MS 070	.017	.017
SRL075	SHL075	ML075 — MS 075	.03	.03
SRL090	SHL090	ML or MS090-095	.04	.04
SRL099	SHL099	ML or MS099-100	.07	.07
SRL110	SHL110	ML110 — MS110	.14	.14
SRL150	SHL150	M150 — MS150	.21	.21
SRL190	SHL190	ML190 — MS190	.27	.27
SRL225	SHL225	ML225 — MS225	.41	.41

Urethane spiders available. Please consult factory.

Spiders – Urethane† and Bronze ★

Catalog Number		Accommodates Coupling	Net Weight lb	
Urethane	Bronze		Urethane	Bronze
—	SBL035	ML 035	—	0.05
SUL050	SBL050	ML050 — MS050	.013	0.08
SUL070	SBL070	ML070 — MS070	.017	0.06
SUL075	SBL075	ML075 — MS075	.03	0.15
SUL090/ 095	SBL090/ 095	ML or MS 090-095	.04	0.17
SUL 099/ 100	SBL099/ 100	ML or MS 099-100	.07	0.50
SUL110	SBL110	ML110 — MS110	.14	0.62
SUL150	SBL150	ML150 — MS150	.21	1.00
SUL190	SBL190	ML190 — MS190	.27	1.30
SUL225	SBL225	ML225 — MS225	.41	1.60

★ Bronze spiders available as Made-to-Order.

Metric Bore Sizes Available
Consult Factory

Parts List and Engineering Data

Coupling Size	QD Bushing (2 Required Per Coupling)*	Steel Flange Assembly (2 Required Per Coupling)		Rubber Element (1 Required Per Coupling)		Max RPM	Horsepower @ 100 RPM (1.0 Factor)	Torque (1.0 Service Factor)		Average Static Torsional Stiffness Coefficient (K)		Approx. WR** (LB - Ft²)
		Flange No.	Weight Each	Element No.	Weight			LB - In	LB - Ft	LB - In/DEG	LB - In/RAD	
5	JA	F5JA	3.0	E5	.6	4500	1.03	649	54.1	244	12,850	.08
6	JA	F6JA	4.0	E6	.9	4000	1.80	1134	94.5	414	23,700	.22
7	SH	F7SH	7.0	E7	1.3	3600	3.12	1966	163.8	544	31,200	.40
8	SDS	F8SDS	8.0	E8	1.7	3100	4.68	2950	245.8	876	50,200	.70
9	SK	F9SK	13.0	E9	2.0	2800	6.90	4349	362.4	1088	62,400	1.33
10	SF	F10SF	17.0	E10	2.0	2600	8.33	5250	437.5	1530	87,700	2.10
11	SF	F11SF	18.0	E11	3.0	2300	9.92	6252	521.0	2420	138,700	2.90
12	E	F12E	31.0	E12	3.8	2100	14.40	9076	756.3	4014	217,000	5.80

* See page B5 for QD bushing bore sizes and dimensions.
** Coupling plus QD bushing.
Weight in pounds.

Rubber tire element also available in Neoprene.

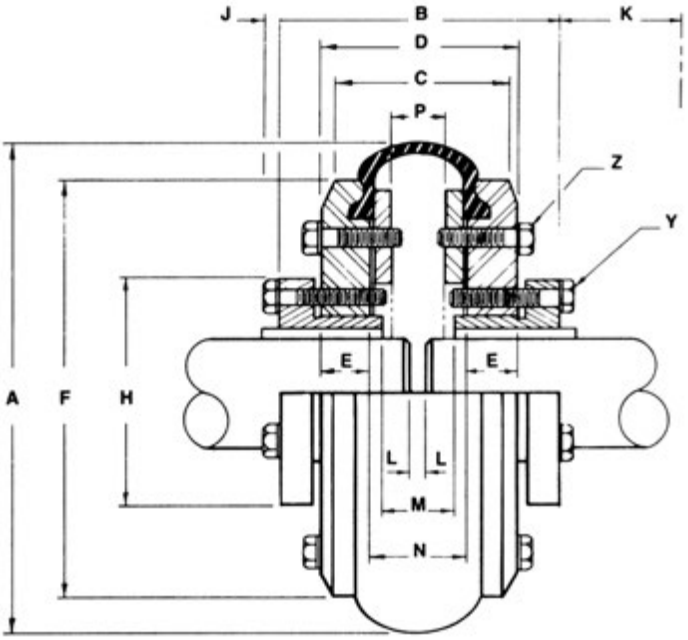

Dimensions

Coupling Size	A	B	C	D	E	F	H	J	K*	L	M	N	P	Y	Z Clamp Ring Bolts		
														B.C. Dia.	B.C. Dia.	No. and Size*** Capscrews	Torque In lb
5	5.25	3.438	2.167	2.563	.625	4	2	.156	1.25	..	1.438	1.313	.375	1.66	2.438	(5) .25 - 20x1.125	125
6	6.5	3.563	2.188	2.688	.625	4.938	2	.156	1.25	..	1.563	1.438	.5	1.66	3.313	(5) .313 - 18x1.125	200
7	7.375	4.313	2.688	3.188	.813	5.625	2.688	.219	1.625	..	1.688	1.563	.75	2.25	3.875	(5) .313 - 18x1.25	300
8	8.375	4.438	2.813	3.313	.813	6.5	3.188	.219	1.625	..	1.813	1.688	.875	2.688	4.625	(6) .313 - 18x1.5	300
9	9.25	5.188	3.438	3.938	1.167	7.375	3.875	.281	2.25	..	1.438	1.813	.875	3.313	5.25	(6) .375 - 16x1.75	400
10	10	5.813	3.563	4.167	1.167	8.313	4.625	.313	2.75	..	1.563	1.563	1	3.875	6	(6) .375 - 16x1.75	400
11	11	5.625	3.125	3.875	1.167	9	4.625	.313	2.75	..	1.375	1.375	.938	3.875	6.5	(6) .375 - 16x1.75	400
12	12.375	7.25	4	4.75	1.375	10.167	6	.438	3.25	..	1.25	1.25	.75	5	7.25	(6) .5 - 13x2.25	900

Shaft ends are normally M or N apart; they may project beyond the bushings. In this case allow space for end float and misalignment.
* Clearance required to remove bushing using pull-up capscrews as jackscrews.
** Grade 8.
Dimensions in inches.

Other Sizes Available as Made-to-Order

Martin-Flex® Couplings

Martin Flex® flexible couplings smoothly transmit power while compensating for shaft misalignment to 4°, parallel misalignment to .125” and end float to .313". The two piece flange design provides quick and easy installation and the elastomeric element absorbs shock and torsional vibration through a wide temperature range.

Selection Procedure

1. Select the proper service factor from Chart 1.
2. Determine **Design Horsepower** by multiplying the **Service Factor** and the **Drive Horsepower.**
3. Locate the intercept of **Shaft Speed** and **Design Horsepower** from Chart 2.
4. Order per coupling: (2) bushings, (2) flange assemblies, (1) flexible tire element.

Chart 1 Service Factors

Application	Factor
AGITATORS	
Paddle or Propeller (Vert. or Horiz.), Screw	1.0
BREWING AND DISTILLING	
Bottling Machinery, Brew Kettle, Cooker (Cont Duty), Mash Tub	1.0
Scale Hopper — Frequent Starting Peaks	1.5
CAN FILLING MACHINE	1.0
CAR DUMPER	1.5
CAR PULLER	1.5
CLARIFIER	1.0
CLASSIFIER	1.0
CLAY-WORKING MACHINES	
Brick Press, Briquette Machine, Clay Working Machine, Pug Mill	1.5
COMPRESSORS	
Lobe, Rotary	2.0
Reciprocating** —	
1 cyl. — single acting	3.5
1 cyl. — double acting	3.0
2 cyl. — single acting	3.0
2 cyl. — double acting	2.5
3 cyl. or more — single acting	2.5
3 cyl. or more — double acting	2.0
CONVEYORS	
Apron, Assembly, Belt, Chain, Flight, Oven	1.0
Reciprocating	2.5
Screw	1.0
CRANES AND HOISTS	
Main Hoist — Medium Duty	1.5
Main Hoist — Heavy Duty	2.0
Skip Hoist, Travel Motion, Trolley Motion, Slope	1.5
CRUSHERS	
Cane	2.0
Gyratory	2.5
DREDGES	
Cable Reel, Conveyor	1.5
Cutter Head Drive, Jog Drive	2.5
Pump, Screen Drive, Stacker, Utility Winch	1.5
DYNAMOMETER	1.0
ELEVATORS	
Bucket, Freight	2.0
EXCITER	1.0
FANS	
Centrifugal	1.0
Cooling Tower	2.0
Large (Mine, etc.)	1.5
Light	1.0
Propeller (indoor)	1.5
FOOD INDUSTRY	
Beet Slicer	1.5
Cereal Cooker	1.0
Dough Mixer, Meat Grinder	1.5
GENERATORS	
Even Load	1.0
Hoist or Railway Service	1.5
Welder Load	2.0
GRIZZLY	2.0
KILN	2.0
LAUNDRY MACHINES	
Tumbler, Washer	2.0
LINE SHAFTS	
Driving Processing Machinery	1.0
Light	1.0
LUMBER INDUSTRY	
Band Resaw, Circular Resaw	1.5
Edger, Head Rig, Hog, Log Haul	2.0
Planer	1.5
Rolls Non-Reversing	1.5
Rolls Reversing	2.0
Sawdust Conveyor	1.0
Slab Conveyor, Sorting Table	1.5
MACHINE TOOLS	
Auxiliary	1.0
Main Drive, Notching Press, Planer (Reversing), Plate Planer, Punch Press	1.5
Traverse	1.0
METAL FORMING MACHINES	
Draw Bench Carriage, Main Drive, Extruder, Wire Drawing, Flattening Machine	2.0
MILLS (ROTARY TYPE)	
Ball or Pebble Direct or	2.5
on LS Shaft Gear Reducer	2.5
on HS Shaft Gear Reducer	2.0
Dryer and Cooler	1.5
Rod or Tube Direct or	2.5
on LS Shaft Gear Reducer	2.5
on HS Shaft Gear Reducer	2.0
Tumbling Barrel	1.5
MIXERS	
Concrete (Continuous or Intermittent), Muller-Simpson type	1.5
OIL INDUSTRY	
Chiller	1.0
Oil Well Pumping (not over 150% peak torque)	2.0
Paraffin Filter Press	1.5
PAPER MILLS	
Agitator	1.0
Barking Drum	2.5
Beater and Pulper	1.5
Bleacher	1.0
Calender	2.0
Chipper	3.0
Couch, Cylinder, Dryer	1.5
Felt Stretcher	1.0
Fourdrinier	1.5
Jordan	2.0
Press	2.0
Pulp Grinder	2.0
Stock Chest	1.5
Stock Pump Reciprocating	2.0
Rotary	1.5
Suction Roll	2.0
Winder	1.5
PARAFFIN FILTER PRESS	1.5
PRINTING PRESS	1.5
PROPELLER (MARINE)	1.5
PULVERIZERS	
Hammermill — Light Duty	1.5
Hammermill — Heavy Duty	2.0
Hog	2.0
Roller	1.5
PUMPS	
Centrifugal	1.0
Descaling, Gear Type	1.5
Oil Well Pumping (not over 150% peak torque)	2.0
Rotary — other than gear	1.5
Reciprocating —	
1 cyl. — single acting	2.5
1 cyl. — double acting	2.0
2 cyl. — single acting	2.0
2 cyl. — double acting	1.5
3 cyl. — or more	1.5
RUBBER INDUSTRY	
BANBURY MIXER	2.5
Calender	2.0
Cracker, Mixing Mill, Plasticator	2.5
Refiner, Sheeter, Tire Building Machine	2.0
Tire and Tube Press Opener (Based on Peak Torque)	1.0
Tuber and Strainer	1.5
Warming Mill	2.0
Washer	2.5
SCREENS	
Air Washing	1.0
Coal and Sand (Rotary)	1.5
Vibrating	2.5
Water	1.0
SEWAGE DISPOSAL EQUIPMENT	1.0
SHOVEL	2.0
SHREDDER	1.5
STEEL INDUSTRY	
Cold Mills Coiler (up or down)	1.5
Strip, Temper	2.0
Hot Mills Coiler (up or down), Edger Drive	1.5
Feed Roll (Blooming), Roughing Mill Delivery (Non-reversing), Sheet, Strip	3.0
Rod Mill	2.5
Soaking Pit Cover Drive	3.0
STEERING GEAR	1.0
STOKER	1.0
TEXTILE MILLS	
Batcher	1.0
Calender, Card Machine, Dry Can	1.5
Dyeing Machinery	1.0
Loom	1.5
Mangel, Napper, Soaper	1.0
Spinner, Tenter Frame	1.5
WINDLASS	1.5
WOODWORKING MACHINES	1.0

The service factors listed are intended only as a general guide for smooth power sources such as electric motors and steam turbines. Add 0.5 to factor for somewhat rougher power sources such as internal combustion engines of four or more cylinders, steam engines and water turbines. Where substantial shock occurs or starting or stopping is frequent as on some “inching” drives and on some reversing drives or where the power source is an internal combustion engine with less than four cylinders — consult factory. Where torsional vibrations occur as in, for example, internal combustion engines or reciprocating compressors or pump applications, check the coupling for possible development of damaging large amplitude vibrations.

** Add 0.5 to factor if without flywheel.

Chart 2 Size Selection

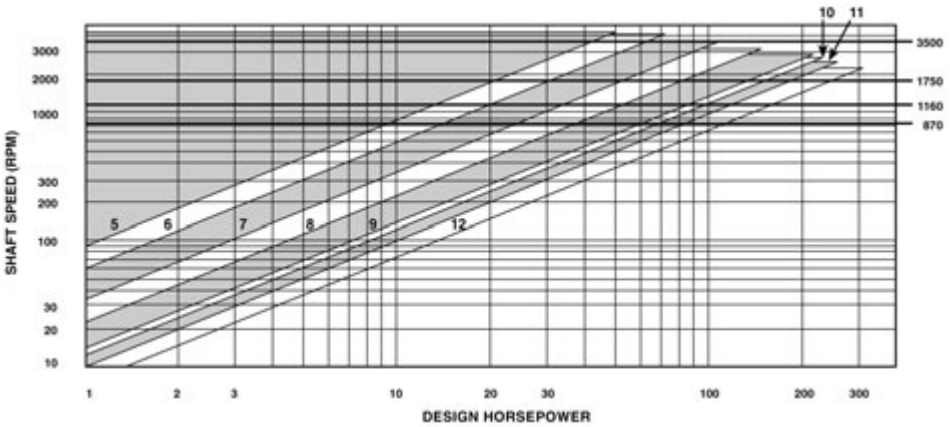

Blue-Flex® Grid Couplings

Martin Blue-Flex® Grid Couplings are the best option where both high torque levels and dampening requirements exist. Unlike other metallic couplings, Martin Blue-Flex® Grid

Couplings have the ability to reduce vibration and cushion shock loads to driven and driving power transmitting equipment components.

Progressive contact between the curved profile of the hub teeth and the flexible grid makes it possible to absorb impact energy by spreading it out, reducing the magnitude of the peak loads.

Martin Blue-Flex® Grid Couplings follow the same Martin Product/Service Standards that make Martin the One Industries Rely On for Quality, Availability, Service and Response Time that is second to none.

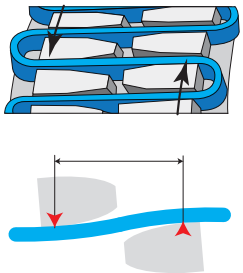

Light Load

The grid bears the stress near the outer edge of the hub teeth. The long span between the point of contact remains free to flex under load variations.

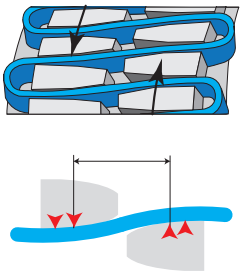

Normal Load

As the load increases, the distance between contact points on the hub teeth is shortened, but a free span still remains to cushion shock loads.

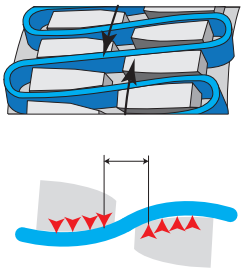

Shock Load

The coupling is flexible within its rated capacity. Under extreme overloads, the grid bears the stress fully on the hub teeth and transmits full load directly.

Available in 2 Close-Coupled Styles

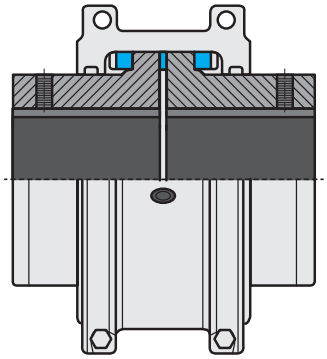

T10

A flexing, close-coupled design for use in four-bearing systems. Includes a horizontally split cover which allows for grid replacement without disturbance of the connected equipment.

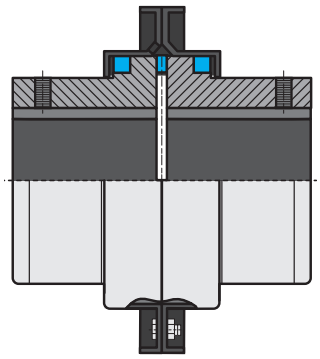

T20

A flexing design featuring a vertically-split steel cover. Ideal for higher running speeds and higher torque capacity.

Cover Design Component Guide

Type T10
Horizontal Cover Design

A flexing, close-coupled design for use in four-bearing systems. Includes a horizontally split cover which allows for grid replacement without disturbance of the connected equipment.

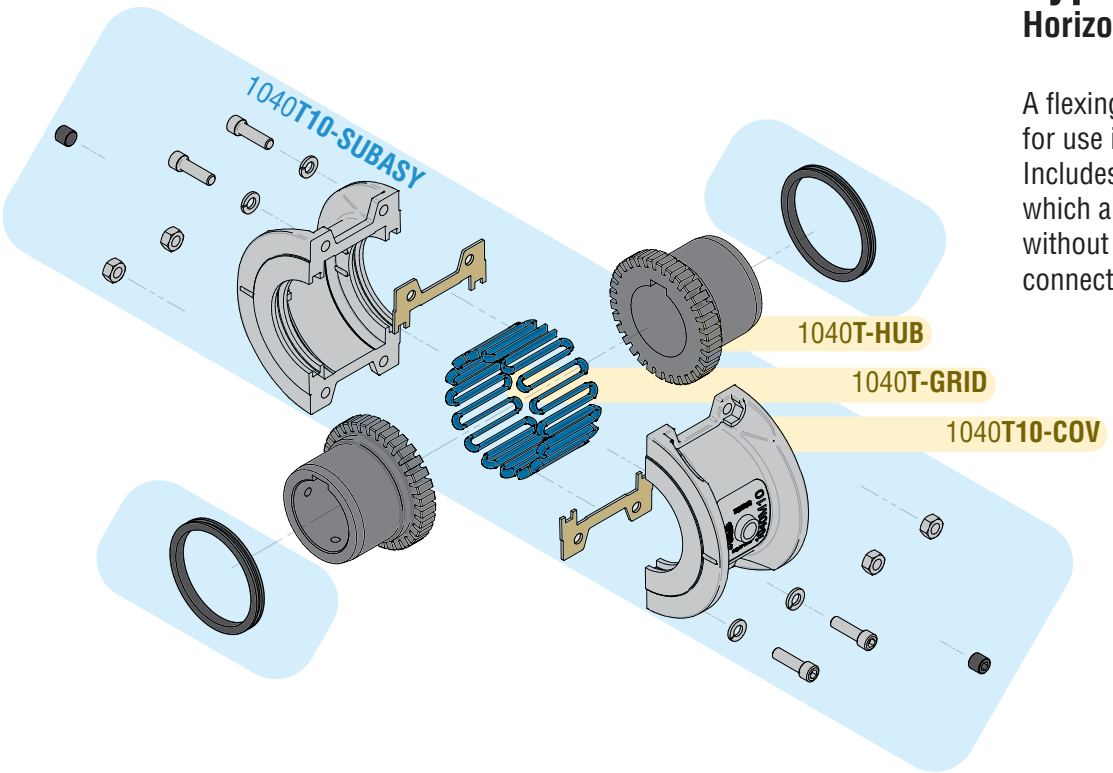

Type T20
Vertical Cover Design

A flexing design featuring a vertically-split steel cover. Ideal for higher running speeds and higher torque capacity.

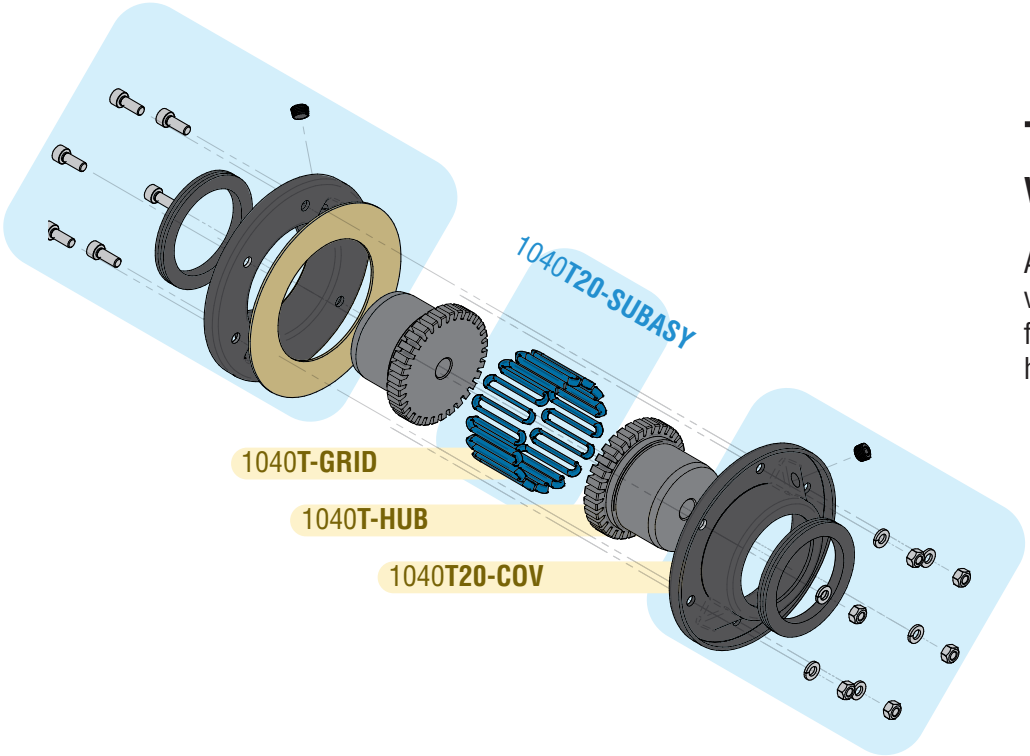

Type T31
Spacer Design

A complete Full Spacer drop out center section allowing easy maintenance of connected equipment, seals and bearings.

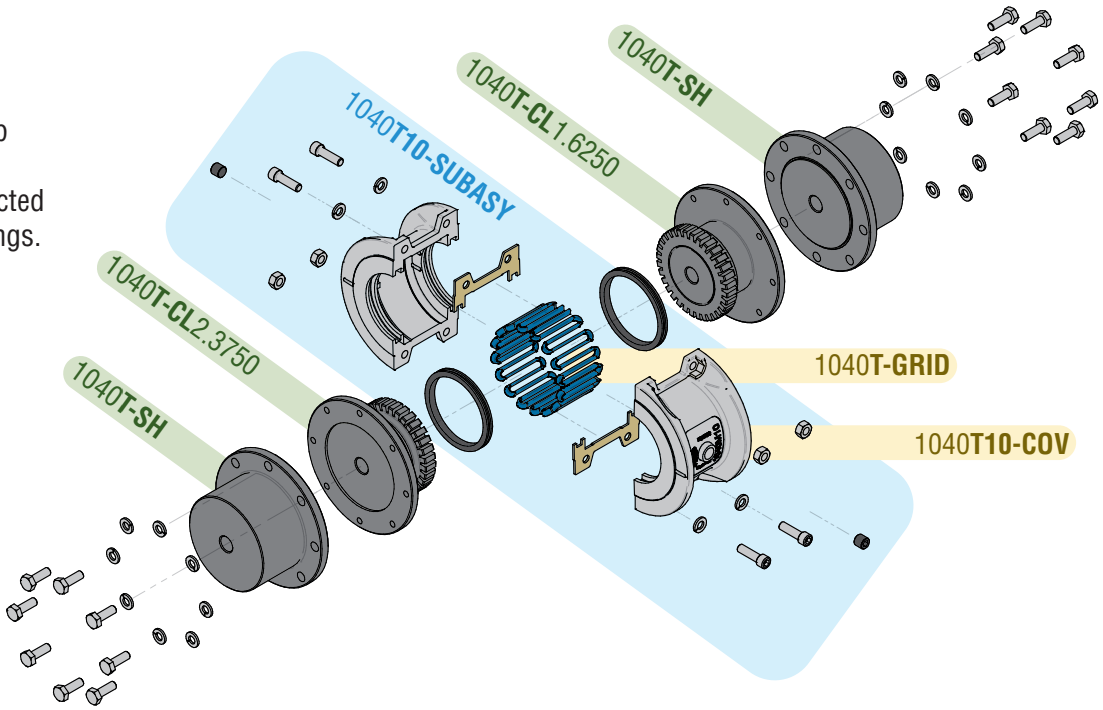

Type T35
Half Spacer Design

An economical solution, offering Half Spacer drop out section allowing easy maintenance of connected equipment, seals and bearings.

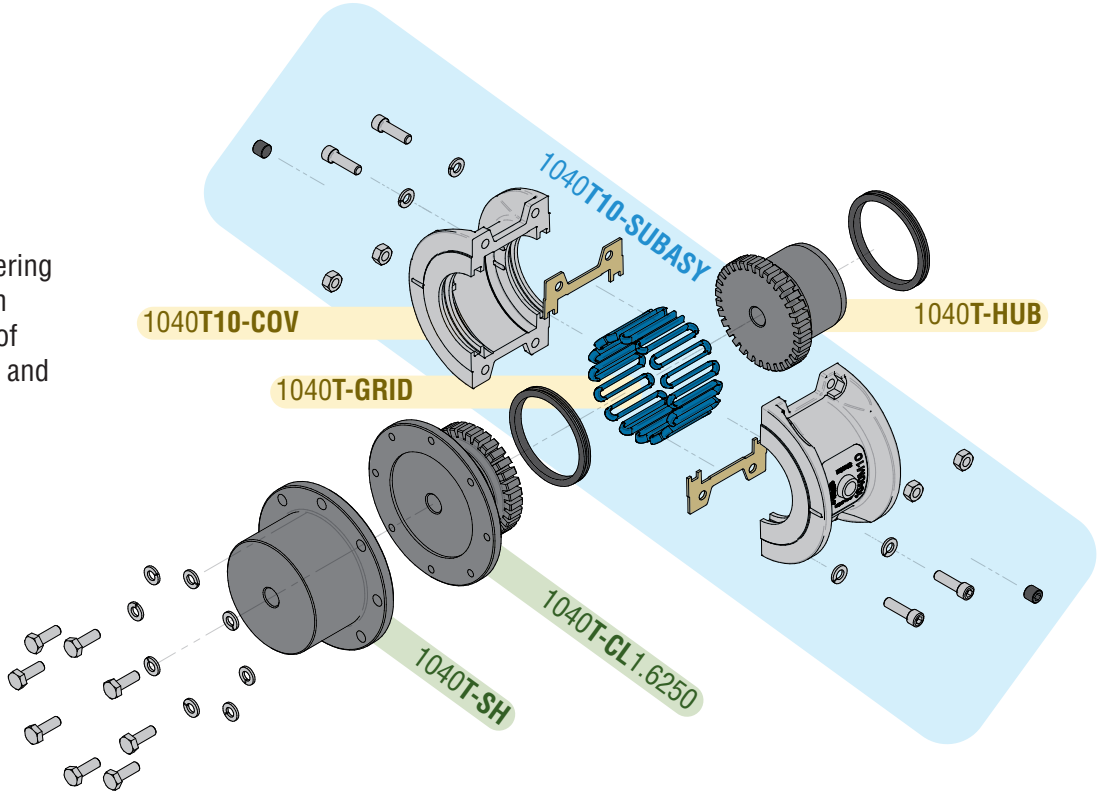

Blue-Flex®
Selection Procedure

Standard Selection Method

The standard selection method can be used for most motor, turbine or engine-driven applications. The following information is required to select a flexible coupling:

- Horsepower or torque
- Running RPM
- Application or type of equipment to be connected
- Shaft diameters
- Shaft gaps
- Physical space limitations
- Special bore or finish, and type of fit

Step 1. Rating: Determine system torque. If torque is not given, calculate as shown below:

$$\text{Torque (lb-in)} = \frac{\text{HP x 63,000}}{\text{RPM}}$$

Where horsepower is the actual or transmitted power required by the application (if unknown, use the motor or turbine nameplate rating) and rpm is the actual speed the coupling is rotating. Applications that require rapid changes in direction or torque reversals should be referred to Martin Engineering.

Step 2. Service Factor: Determine appropriate service factor from C-40.

Step 3. Required Minimum Coupling Rating: Determine the required minimum coupling rating as shown below:

Min. Coupling Rating = S.F. (Service Factor) x Torque (lb-in)

Step 4. Type: Refer to pages C-34 and C-35 and select the appropriate coupling type.

Step 5. Size: Turn to appropriate pages for the coupling type chosen and trace down the torque column to a value that is equal or greater than that determined in Step 3 above. The coupling size is shown in the first column.

Step 6. Check: Speed (RPM), bore, gap and dimensions.

Example: A Field Engineer wants to use a Grid Coupling to connect a 60 horsepower electric motor running at 1750 RPM to a rotary lobe compressor. The shaft diameter of both the motor and compressor is 1 3/4". Motor shaft extension is 3" and compressor shaft extension is 2 1/2". Gap between shaft ends is 1/8".

1. **Determine Required Rating:**

   $$\text{Torque (lb-in)} = \frac{\text{60 x 63,000}}{\text{1750 RPM}} = \text{2160 lb-in}$$

2. **Service Factor:** From C-38 = 1.25

3. **Required Min. Coupling Rating**:

   1.25 x 2160 lb-in = 2700 lb-in

4. **Size:** From page C-42 a size 1050T10 is the proper selection based on a torque rating of 3850 lb-in exceeding the required min. coupling rating of 2700 lb-in.

5. **Check:** Allowable speed capacity of 4500 (T10) exceeds the required speed of 1750 rpm. Maximum bore capacity of 1 7/8" exceeds the actual shaft diameters.

Formula Selection Method

The Standard Selection Method will work when selecting most couplings. The Formula Selection Method should be used for:

- High Peak Loads
- High Braking Torques

Providing system peak torque and frequency, duty cycle and brake torque rating will allow for a more refined selection using the Formula Selection Method.

1. **High Peak Loads:** Use one of the following formulas for applications using motors with torque characteristics that are higher than normal; applications with intermittent operations, shock loading, inertia effects due to starting and stopping and/or system-induced repetitive high peak torques. System Peak Torque is the maximum torque that can exist in the system. Select a coupling with a torque rating equal to or greater than selection torque calculated below.

   a. Non-Reversing High Peak Torque

   Selection Torque (lb-in) = System Peak Torque

   or

   $$\text{System Torque (lb-in)} = \frac{\text{System Peak HP} \times 63{,}000}{\text{RPM}}$$

   b. Reversing High Peak Torque

   Selection Torque (lb-in) = 2 x System Peak Torque

   or

   $$\text{System Torque (lb-in)} = \frac{2 \times \text{Peak HP} \times 63{,}000}{\text{RPM}}$$

   c. Occasional Peak Torques (Non-reversing) If a system peak torque occurs less than 1000 times during the expected coupling life, use the following formula:

   Selection Torque (lb-in) = 0.5 x System Peak Torque

   or

   $$\text{System Torque (lb-in)} = \frac{0.5 \times \text{Peak HP} \times 63{,}000}{\text{RPM}}$$

2. **High Braking Torques:** If the torque rating of the braking exceeds the motor torque, use the braking rating as follows:

   Selection Torque (lb-in) = Braking Torque Rating x S.F.

Example: A Maintenance Engineer needs a Grid Coupling to connect an electric motor to a reversing runout mill table roll. The system peak torque is estimated to be 118,000 lb-in with the motor running at 80 RPM. The motor shaft diameter is 7" and the driven shaft diameter is 8" . The motor and driven shaft extensions are both 8 1/2". Distance between shaft ends is 8.00".

1. **Type:** Refer to pages C-34 and C-35 and select the appropriate.

2. **Required Minimum Coupling Rating:**

   Use the Reversing High Peak Torque formula.
   2 x 118,000 = 236,000 = Selection Torque

3. **Size:** From page C-46 a size 1140T10 with a torque rating of 253,000 exceeds the selection torque of 236,000 lb-in.

4. **Check:** The 1140T35 has a maximum BE dimension of 8.06"; maximum bore of 8" with one rectangular key (Table 3, page C-37); and the allowable speed of 1650 rpm and the dimensions on page C-46, meet the requirements.

Table 3 – Coupling Ratings & Allowable Speeds

Coupling Size	HP per 100 RPM	Torque Rating (lb-in)	Allowable Speeds – RPM ★		
			T10	T20	T31, T35, T10/82
1020T	0.73	460	4,500	6,000	3,600
1030T	2.09	1,320	4,500	6,000	3,600
1040T	3.49	2,200	4,500	6,000	3,600
1050T	6.11	3,850	4,500	6,000	3,600
1060T	9.60	6,050	4,350	6,000	3,600
1070T	14.0	8,800	4,125	5,500	3,600
1080T	28.8	18,150	3,600	4,750	3,600
1090T	52.4	33,000	3,600	4,000	3,600
1100T	88.1	55,550	2,440	3,250	2,440
1110T	131	82,500	2,250	3,000	2,250
1120T	192	121,000	2,025	2,700	2,025
1130T	279	176,000	1,800	2,400	1,800
1140T	401	253,000	1,650	2,200	1,650
1150T	559	352,000	1,500	2,000	1,500
1160T	785	495,000	1,350	1,750	1,350
1170T	1047	660,000	1,225	1,600	1,225
1180T	1452	915,200	1,100	1,400	1,100
1190T	1920	1,210,000	1,050	1,300	1,050
1200T	2618	1,650,000	900	1,200	900

★ Consult Martin for higher speeds.

Blue-Flex®
Selection Procedure

Quick Selection Method

Step 1. Select Coupling Type. Refer to pages C-34 and C-35 and select the type of coupling to suit your application. If an application requires a special purpose coupling, refer application details to your local Martin representative.

Step 2. Determine Service Factor. Refer to Table 6 and Table 7.

A. Refer to the Formula Selection Method if your application has high braking torques or high peak loads.

Step 3. Determine Equivalent Horsepower. Refer to Table 4 – Under the actual HP required and tracing horizontally from the service factor determined in Step 2, read the equivalent HP.

Step 4. Determine Coupling Size.

A. Refer to Table 5 – Trace horizontally from the required speed to a hp value equal to or larger than the hp determined in Step 3. Read the coupling size at top of column.

B. Check shaft diameters on coupling maximum bores shown on pages for the type of coupling selected. If a larger bore is required, select a larger coupling.

C. Check the required speed against the allowable speed shown in Table 3 page C-37 for the type of coupling selected. If a higher speed is required, refer to Martin Engineering.

D. Check application dimension requirements against catalog page for the type of coupling selected.

Example: A 400 horsepower electric motor rated for 1200 RPM needs a Grid Coupling to drive a tire shredder. The shaft gap is 0.1" to 0.2". The motor shaft diameter is 3" and the driven shaft diameter is 3 1/4". The motor and driven shaft extensions are both 5".

1. **Select Coupling Type**: To connect close-coupled shafts (0.1" to 0.2" gap), a Type T10 or T20 coupling is the proper selection. Type T10 is selected.
2. **Determine Service Factor:** From Table 6, the service factor is 1.5.
3. **Determine Equivalent HP:** From Table 4, the equivalent HP is 600.
4. **Select Coupling Size:** (A) From Table 5, the coupling size is 1090T10. (B) From Table 8, the maximum bore with square key is 3.500". (C) From Table 3, the allowable speed of a 1090T10 is 3600 RPM. (D) Dimensions for the 1090T10 coupling shown on page C-42 satisfies the application requirements.

Table 4 – Equivalent Horsepower = (Actual HP x Service Factor)

Service Factor •	Actual HP																									
	3/4	1	1-1/2	2	3	5	7-1/2	10	15	20	25	30	40	50	60	75	100	125	150	200	250	300	350	400	450	500
1.00	0.75	1.0	1.5	2.0	3.0	5.0	7.5	10	15	20	25	30	40	50	60	75	100	125	150	200	250	300	350	400	450	500
1.25	0.94	1.25	1.9	2.5	3.8	6.3	9.4	12.5	19	25	31	38	50	63	75	94	125	156	188	250	312	375	438	500	563	625
1.50	1.1	1.5	2.3	3.0	4.5	7.5	11.3	15	23	30	38	45	60	75	90	113	150	188	225	300	375	450	525	600	675	750
1.75	1.3	1.8	2.6	3.5	5.3	8.8	13.1	18	26	35	44	53	70	88	105	131	175	219	262	350	438	525	613	700	787	875
2.00	1.5	2.0	3.0	4.0	6.0	10.0	15.0	20	30	40	50	60	80	100	120	150	200	250	300	400	500	600	700	800	900	1000
2.50	1.9	2.5	3.8	5.0	7.5	12.5	18.8	25	38	50	63	75	100	125	150	187	250	312	375	500	625	750	875	1000	1125	1250
3.00	2.3	3.0	4.5	6.0	9.0	15.0	22.5	30	45	60	75	90	120	150	180	225	300	375	450	600	750	900	1050	1200	1350	1500
3.50	2.6	3.5	5.3	7.0	10.5	17.5	26.2	35	52	70	87	105	140	175	210	262	350	437	525	700	875	1050	1225	1400	1575	1750

• For service factor not listed, Equivalent HP = Actual HP x Service Factor.

Table 5 – Coupling Selection Based on Equivalent HP Ratings

Coupling Size	1020T	1030T	1040T	1050T	1060T	1070T	1080T	1090T	1100T	1110T	1120T	1130T	1140T	1150T	1160T	1170T	1180T	1190T	1200T
Max Bore (in)	1.125	1.375	1.625	1.875	2.125	2.500	3.000	3.500	4.000	4.500	5.000	6.000	7.250	8.000	9.000	10.000	11.000	12.000	13.000
Max Speed T10	4500 RPM	4500 RPM	4500 RPM	4500 RPM	4350 RPM	4125 RPM	3600 RPM	3600 RPM	2440 RPM	2250 RPM	2025 RPM	1800 RPM	1650 RPM	1500 RPM	1350 RPM	1225 RPM	1100 RPM	1050 RPM	900 RPM
Max Speed T20	6000 RPM	6000 RPM	6000 RPM	6000 RPM	6000 RPM	5500 RPM	4750 RPM	4000 RPM	3250 RPM	3000 RPM	2700 RPM	2400 RPM	2200 RPM	2000 RPM	1750 RPM	1600 RPM	1400 RPM	1300 RPM	1100 RPM
Torque (lb-in)	460	1320	2200	3850	6050	8800	18,150	33,000	55,550	82,500	121,000	176,000	253,000	352,000	495,000	660,000	915,200	1,210,000	1,650,000
HP/100 RPM	0.73	2.09	3.49	6.11	9.60	14.0	28.8	52.4	88.1	131	192	279	401	559	785	1047	1452	1920	2618
RPM	HP Ratings																		
4500	32.8	94.2	157	275	432 ◊	628 ◊	1296 ◊	–	–	–	–	–	–	–	–	–	–	–	–
3600	26.3	75.4	126	220	346	503	1037	1885	–	–	–	–	–	–	–	–	–	–	–
3000	21.9	62.8	105	183	288	419	864	1571	2644 ◊	3927 ◊	–	–	–	–	–	–	–	–	–
2500	18.2	52.4	87	153	240	349	720	1309	2203 ◊	3273 ◊	3456 ◊	–	–	–	–	–	–	–	–
2100	15.3	44.0	73.3	128	202	293	605	1100	1851	2749	3456 ◊	5864 ◊	8430 ◊	–	–	–	–	–	–
1800	13.1	37.7	62.8	110	173	251	518	942	1587	2356	3456	5027	7226 ◊	10053 ◊	–	–	–	–	–
1750	12.8	36.7	61.1	107	168	244	504	916	1542	2291	3360	4887	7025 ◊	9774 ◊	13745 ◊	–	–	–	–
1450	10.6	30.4	50.6	89	139	202	418	759	1278	1898	2784	4049	5821	8098	11388 ◊	15184 ◊	–	–	–
1170	8.5	24.5	40.8	71.5	112	163	337	613	1031	1532	2246	3267	4697	6535	9189	12252	–	–	–
1000	7.3	20.9	34.9	61.1	96	140	288	524	881	1309	1920	2793	4014	5585	7854	10472	14521	19199	–
870	6.3	18.2	30.4	53.1	84	121	251	456	767	1139	1670	2430	3492	4859	6833	9111	12633	16703	22777
720	5.3	15.1	25.1	44.0	69	101	207	377	635	942	1382	2011	2890	4021	5655	7540	10455	13823	18850
650	4.7	13.6	22.7	39.7	62.4	91	187	340	573	851	1248	1815	2609	3630	5105	6807	9439	12479	17017
580	4.2	12.1	20.2	35.4	55.7	81	167	304	511	759	1114	1620	2328	3239	4555	6074	8422	11135	15184
520	3.8	10.9	18.2	31.8	49.9	73	150	272	458	681	998	1452	2087	2904	4084	5445	7551	9983	13614
420	3.1	8.8	14.7	25.7	40.3	59	121	220	370	550	806	1173	1686	2346	3299	4398	6099	8063	10996
350	2.6	7.3	12.2	21.4	33.6	49	101	183	308	458	672	977	1405	1955	2749	3665	5082	6720	9163
280	2.0	5.9	9.8	17.1	26.9	39.1	81	147	247	367	538	782	1124	1564	2199	2932	4066	5376	7330
230	1.7	4.8	8.0	14.0	22.1	32.1	66	120	203	301	442	642	923	1285	1806	2409	3340	4416	6021
190	1.4	4.0	6.6	11.6	18.2	26.5	55	99	167	249	365	531	763	1061	1492	1990	2759	3648	4974
155	1.1	3.2	5.4	9.5	14.9	21.6	44.6	81	137	203	298	433	622	866	1217	1623	2251	2976	4058
125	0.9	2.6	4.4	7.6	12.0	17.5	36.0	65	110	164	240	349	502	698	982	1309	1815	2400	3273
100	0.73	2.1	3.5	6.1	9.6	14.0	28.8	52	88	131	192	279	401	559	785	1047	1452	1920	2618
84	0.61	1.8	2.9	5.1	8.1	11.7	24.2	44.0	74	110	161	235	337	469	660	880	1220	1613	2199
68	0.50	1.4	2.4	4.2	6.5	9.5	19.6	35.6	60	89	131	190	273	380	534	712	987	1306	1780
56	0.41	1.17	2.0	3.4	5.4	7.8	16.1	29.3	49	73	108	156	225	313	440	586	813	1075	1466
45	0.33	0.94	1.6	2.7	4.3	6.3	13.0	23.6	39.7	59	86	126	181	251	353	471	653	864	1178
37	0.27	0.77	1.3	2.3	3.6	5.2	10.7	19.4	32.6	48.4	71	103	149	207	291	387	537	710	969
30	0.22	0.63	1.0	1.8	2.9	4.2	8.6	15.7	26.4	39.3	58	84	120	168	236	314	436	576	785
25	0.18	0.52	0.9	1.5	2.4	3.5	7.2	13.1	22.0	32.7	48.0	70	100	140	196	262	363	480	655
20	0.15	0.42	0.70	1.2	1.9	2.8	5.8	10.5	17.6	26.2	38.4	56	80	112	157	209	290	384	524
16.5	0.12	0.35	0.58	1.0	1.6	2.3	4.8	8.6	14.5	21.6	31.7	46.1	66	92	130	173	240	317	432
13	0.095	0.27	0.45	0.79	1.2	1.8	3.7	6.8	11.5	17.0	25.0	36.3	54	75	106	141	196	259	353
11	0.080	0.23	0.38	0.67	1.1	1.5	3.2	5.8	9.7	14.4	21.1	30.7	44.2	61	86	115	160	211	288
9	0.066	0.19	0.31	0.55	0.86	1.3	2.6	4.7	7.9	11.8	17.3	25.1	36.1	50	71	94	131	173	236
7.5	0.055	0.16	0.26	0.46	0.72	1.0	2.2	3.9	6.6	9.8	14.4	20.9	30.1	42	59	79	109	144	196
5	0.036	0.10	0.17	0.31	0.48	0.7	1.4	2.6	4.4	6.5	9.6	14.0	20.1	27.9	39	52	73	96	131

◊ Ratings apply to Type T20 only.

Blue-Flex®
Selection Procedure

Table 6 – Flexible Coupling Service Factors♦ Service factors listed are typical values based on normal operation of the drive systems.

Application	Service Factor
AERATOR	2.0
AGITATORS	
Vertical and Horizontal Screw, Propeller, Paddle	1.0
BARGE HAUL PULLER	1.5
BLOWERS	
Centrifugal	1.0
Lobe or Vane	1.25
CAR DUMPERS	2.5
CAR PULLERS	1.5
CLARIFIER OR CLASSIFIER	1.0
COMPRESSORS	
Centrifugal	1.0
Rotary, Lobe or Vane	1.25
Rotary, Screw	1.0
Reciprocating Direct Connected	•
Without Flywheel	•
With Flywheel and Gear between Compressor and Prime Mover	
1 cylinder, single acting	3.0
1 cylinder, double acting	3.0
2 cylinders, single acting	3.0
2 cylinders, double acting	3.0
3 cylinders, single acting	3.0
3 cylinders, double acting	2.0
4 or more cyl., single act	1.75
4 or more cyl., double act	1.75
CONVEYORS	
Apron, Assembly, Belt, Chain, Flight, Screw	1.0
Bucket	1.25

Application	Service Factor
Live Roll, Shaker and Reciprocating	3.0
CRANES AND HOIST	
Main Hoist	1.7
Skip Hoist	1.75
Slope	1.5
Bridge, Travel or Trolley	1.75
DYNAMOMETER	1.0
ELEVATORS	
Bucket, Centrifugal Discharge	1.25
Freight or Passenger	◊
Gravity Discharge	1.25
ESCALATORS	◊
EXCITER, GENERATOR	1.0
EXTRUDER, PLASTIC	1.5
FANS	
Centrifugal	1.0
Cooling Tower	2.0
Forced Draft — Across the Line start	1.5
Forced Draft Motor driven thru fluid or electric slip clutch	1.0
Gas Recirculating	1.5
Induced Draft with damper control or blade cleaner	1.25
Induced Draft without controls	2.0
FEEDERS	
Apron, Belt, Disc, Screw	1.0
Reciprocating	2.5
GENERATORS	
Even Load	1.0
Hoist or Railway Service	1.5

Application	Service Factor
Welder Load	2.0
HAMMERMILL	1.75
LAUNDRY WASHER OR TUMBLER	2.0
LINE SHAFTS	
Any Processing Machinery	1.5
MACHINE TOOLS	
Auxiliary and Traverse Drive	1.0
Bending Roll, Notching Press, Punch Press, Planer, Plate Reversing	1.75
Main Drive	1.5
MAN LIFTS	◊
METAL FORMING MACHINES	
Continuous Caster	1.75
Draw Bench Carriage and Main Drive	2.0
Extruder	2.0
Farming Machine and Forming Mills	2.0
Slitters	1.0
Wire Drawing or Flattening	1.75
Wire Winder	1.5
Coilers and Uncoilers	1.5
MIXERS (see Agitators)	
Concrete	1.75
Muller	1.5
PRESS, PRINTING	1.5
PUG MILL	1.75
PULVERIZERS	
Hammermill and Hog	1.75
Roller	1.5
PUMPS	
Boiler Feed	1.5

Application	Service Factor
Centrifugal — Constant Speed	1.0
Frequent Speed Changes under Load	1.25
Descaling, with accumulators	1.25
Gear, Rotary, or Vane	1.25
Reciprocating, Plunger Piston	
1 cyl., single or double act	3.0
2 cyl., single acting	2.0
2 cyl., double acting	1.75
3 or more cylinders	1.5
Screw Pump, Progressing Cavity	1.25
Vacuum Pump	1.25
SCREENS	
Air Washing	1.0
Grizzly	2.0
Rotary Coal or Sand	1.5
Vibrating	2.5
Water	1.0
SKI TOWS & LIFTS	◊
STEERING GEAR	1.0
STOKER	1.0
TIRE SHREDDER	1.50
TUMBLING BARREL	1.75
WINCH, MANEUVERING	
Dredge, Marine	1.5
WINDLASS	1.5
WOODWORKING MACHINERY	1.0
WORK LIFT PLATFORMS	◊

Industry	Service Factor
AGGREGATE, CEMENT, MINING	
KILNS; TUBE, ROD AND BALL MILLS	
Direct or on L.S. shaft of Reducer, with final drive Machined Spur Gears	2.0
Single Helical or Herringbone Gears	1.75
Conveyors, Feeders, Screens, Elevators	★
Crushers, Ore or Stone	2.5
Dryer, Rotary	1.75
Grizzly	2.0
Hammermill or Hog	1.75
Tumbling Mill or Barrel	1.75
BREWING AND DISTILLING	
Bottle and Can Filling Machines	1.0
Brew Kettle	1.0
Cookers, Continuous Duty	1.25
Lauter Tub	1.5
Mash Tub	1.25
Scale Hopper, Frequent Peaks	1.75
CLAY WORKING INDUSTRY	
Brick Press, Briquette Machine, Clay Working	
Machine, Pug Mill	1.75
DREDGES	
Cable Reel	1.75
Conveyors	1.25
Cutter head, Jig Drive	2.0
Maneuvering Winch	1.5
Pumps (uniform load)	1.5
Screen Drive, Stacker	1.75
Utility Winch	1.5
FOOD INDUSTRY	
Beet Slicer	1.75
Bottling, Can Filling Machine	1.0
Cereal Cooker	1.25
Dough Mixer, Meat Grinder	1.75
LUMBER	
Band Resaw	1.5
Circular Resaw, Cut-off	1.75
Edger, Head Rig, Hog	2.0
Gang Saw (Reciprocating)	•
Log Haul	2.0
Planer	1.75

Industry	Service Factor
Rolls, Non-Reversing	1.25
Rolls, Reversing	2.0
Sawdust Conveyor	1.25
Slab Conveyor	1.75
Sorting Table	1.5
Trimmer	1.75
METAL ROLLING MILLS	
Coilers (Up or Down) Cold Mills only	1.5
Coilers (Up or Down) Hot Mills only	2.0
Coke Plants	
Pusher Ram Drive	2.5
Door Opener	2.0
Pusher or Larry Car Traction Drive	3.0
Continuous Caster	1.75
Cold Mills — Strip Mills	•
Temper Mills	•
Cooling Beds	1.5
Drawbench	2.0
Feed Rolls - Blooming Mills	3.0
Furnace Pushers	2.0
Hot and Cold Saws	2.0
Hot Mills —	
Strip or Sheet Mills	•
Reversing Blooming	•
Slabbing Mills	•
Edger Drives	•
Ingot Cars	2.0
Manipulators	3.0
Merchant Mills	•
Mill Tables	
Roughing Breakdown Mills	3.0
Hot Bed or Transfer, non-reversing	1.5
Runout, reversing	3.0
Runout, non-reversing, non-plugging	2.0
Reel Drives	1.75
Rod Mills	•
Screwdown	2.0
Seamless Tube Mills	
Piercer	3.0
Thrust Block	2.0
Tube Conveyor Rolls	2.0
Reeler	2.0
Kick Out	2.0

Industry	Service Factor
Shear, Croppers	•
Sideguards	3.0
Skelp Mills	•
Slitters, Steel Mill only	1.75
Soaking Pit Cover Drives —	
Lift	1.0
Travel	2.0
Straighteners	2.0
Unscramblers (Billet Bundle Busters)	2.0
Wire Drawing Machinery	1.75
OIL INDUSTRY	
Chiller	1.25
Oilwell Pumping (not over 150% peak torque)	2.0
Paraffin Filter Press	1.5
Rotary Kiln	2.0
PAPER MILLS	
Barker Auxiliary, Hydraulic	2.0
Barker, Mechanical	2.0
Barking Drum	
L.S. shaft of reducer with final drive - Helical	
or Herringbone Gear	2.0
Machined Spur Gear	2.5
Cast Tooth Spur Gear	3.0
Beater & Pulper	1.75
Bleachers, Coaters	1.0
Calender & Super Calender	1.75
Chipper	2.5
Converting Machine	1.25
Couch	1.75
Cutter, Felt Whipper	2.0
Cylinder	1.75
Dryer	1.75
Felt Stretcher	1.25
Fourdrinier	1.75
Jordan	2.0
Log Haul	2.0
Line Shaft	1.5
Press	1.75
Pulp Grinder	1.75
Reel, Rewinder, Winder	1.5
Stock Chest, Washer, Thickener	1.5
Stock Pumps, Centrifugal	

Industry	Service Factor
Constant Speed	1.0
Frequent Speed Changes Under Load	1.25
Suction Roll	1.75
Vacuum Pumps	1.25
RU BBER INDUSTRY	
Calender	2.0
Cracker, Plasticator	2.5
Extruder	1.75
Intensive or Banbury Mixer	2.5
Mixing Mill, Refiner or Sheeter	
One or two in line	2.5
Three or four in line	2.0
Five or more in line	1.75
Tire Building Machine	2.5
Tire & Tube Press Opener (Peak Torque)	1.0
Tuber, Strainer, Pelletizer	1.75
Warming Mill	
One or two Mills in line	2.0
Three or more Mills in line	1.75
Washer	2.5
SEWAGE DISPOSAL EQUIPMENT	
Bar Screen, Chemical Feeders, Collectors, Dewatering Screen, Grit Collector	1.0
SUGAR INDUSTRY	
Cane Carrier & Leveler	1.75
Cane Knife & Crusher	2.0
Mill Stands, Turbine Driver with all Helical or Herringbone gears	1.5
Electric Drive or Steam Engine Drive with Helical, Herringbone, or Spur Gears with any Prime Mover	1.75
TEXTILE INDUSTRY	
Batcher	1.25
Calender, Card Machine	1.5
Cloth Finishing Machine	1.5
Dry Can, Loom	1.5
Dyeing Machinery	1.25
Knitting Machine	•
Mangle, Napper, Soaper	1.25
Spinner, Tenter Frame, Winder	1.5

• Refer to Factory

◊ Not Approved

★ See Application Listing

♦ For engine drives, refer to Table 7. Electric motors, generators, engines, compressors and other machines fitted with sleeves or straight roller bearings usually require limited end float couplings. If in doubt, provide axial clearances and centering forces to the Factory for a recommendation.

Table 7 – Engine Drive Service Factors

Service Factors (S. F.) for engine drives are those required for applications where good flywheel regulation prevents torque fluctuations greater than ±20%. For drives where torque fluctuations are greater or where the operation is near a serious critical or torsional vibration, a mass elastic study is necessary.

No. of Cylinders	4 or 5					6 or more				
Table 6 S.F.	1.0	1.25	1.5	1.75	2.0	1.0	1.25	1.5	1.75	2.0
Engine S.F.	2.0	2.25	2.5	2.75	3.0	1.5	1.75	2.0	2.25	2.5

To use Table 7, first determine application service factor from Table 6. Use that factor to determine Engine Service Factor from Table 7. When service factor from Table 6 is greater than 2.0, or where 1, 2 or 3 cylinder engines are involved, refer complete application details to Martin Engineering.

How to Order Blue-Flex®

How to Order

To ensure your exact specifications are met the following information is required for a quote or order.

Step 1. Application: Driver & Driven

Step 2. Power: Normal hp, Maximum hp or Torque (lb-in)

Step 3. Speed (RPM)

Step 4. Quantity

Step 5 Coupling Size and Type

Step 6. Shaft Gap or distance between shaft ends (BE Dimension)

Step 7. Bore Sizes: Must specify clearance or interference fit, or fit will be furnished per Table 14, page C-54. Bore sizes will be furnished as per Table 16 on page C-55 or Table 17 on pages C-56 and C-57 unless specified differently

Step 8. Shaft Dimensions as follows:

For Straight Shafts:

Driving Shaft		Driven Shaft	
Diameter	_____	Diameter	_____
Tolerance	_____	Tolerance	_____
Length	_____	Length	_____
Keyway	_____	Keyway	_____

NOTE: Provide shaft tolerances if different than those shown in Table 15 through Table 17, pages C-46 to C-48. Unless otherwise specified, keyway sizes in inch shafts will be furnished based on key sizes listed in Table 14, page C-45, to Martin tolerances; metric keyways will be furnished for keys listed in Table 14, page C-45 per ISO/R773-1969 (ANSI/AGMA 9112) and JS9 width tolerances. For other shaft/bore requirements, consult Martin.

Service Factors

Are a guide, based on experience, of the ratio between coupling catalog rating and system characteristics. The system characteristics are best measured with a torque meter.

Torque Demands Driven Machine	Typical applications for electric motor or turbine driven equipment	Typical Service Factor
	Constant torque such as Centrifugal Pumps, Blowers and Compressors.	1.0
	Continuous duty with some torque variations including Plastic Extruders, Forced Draft Fans.	1.5
	Light shock loads from Metal Extruders, Cooling Towers, Cane Knife, Log Haul.	2.0
	Moderate shock loading as expected from a Car Dumper, Stone Crusher, Vibrating Screen.	2.5
	Heavy shock load with some negative torques from Roughing Mills, Reciprocating Pumps, Compressors, Reversing Runout Tables.	3.0
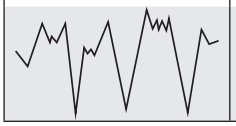	Applications like Reciprocating Compressors with frequent torque reversals, which do not necessarily cause reverse rotations.	Refer to Factory

Stock
T10 Cover Design

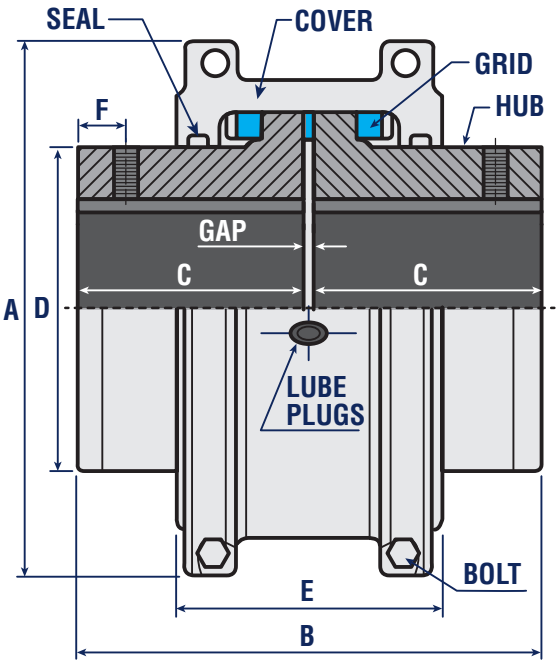

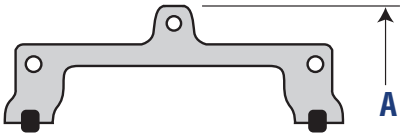

Sizes 1150 - 1200

Martin Blue-Flex® Grid Coupling – T10 Style

Coupling Size	HP per 100 RPM	Max Speed (RPM)	Basic Torque (lb-in)	Bore Dia.		Dimensions (in)						Gap (in)	Complete Weight (lb)	Lub. Wt. (lb)
				Max.	Min.	A	B	C	D	E	F	Normal		
1020T10	0.68	4,500	460	1.12	0.50	4.00	3.86	1.87	1.56	2.62	0.31	0.12	4.2	0.1
1030T10	1.93	4,500	1,320	1.37	0.50	4.37	3.86	1.87	1.94	2.69	0.31	0.12	5.7	0.1
1040T10	3.22	4,500	2,200	1.62	0.50	4.63	4.12	2.00	2.25	2.76	0.31	0.12	7.5	0.1
1050T10	5.63	4,500	3,850	1.87	0.50	5.43	4.87	2.37	2.63	3.13	0.31	0.12	11.9	0.1
1060T10	8.85	4,350	6,050	2.12	0.75	5.93	5.12	2.50	3.00	3.62	0.31	0.12	16.1	0.2
1070T10	13	4,125	8,800	2.50	0.75	6.37	6.12	3.00	3.44	3.74	0.50	0.12	22.0	0.2
1080T10	27	3,600	18,150	3.00	1.06	7.64	7.12	3.50	4.13	4.57	0.50	0.12	39.7	0.4
1090T10	48	3,600	33,000	3.50	1.06	8.39	7.87	3.87	4.87	4.80	0.63	0.12	55.1	0.6
1100T10	81	2,400	55,550	4.00	1.63	9.84	9.67	4.75	5.59	6.12	0.63	0.18	92.6	0.9
1110T10	121	2,250	82,500	4.50	1.63	10.63	10.18	5.00	6.31	6.36	0.75	0.18	119.0	1.1
1120T10	177	2,025	121,000	5.00	2.37	12.13	11.98	5.87	7.06	7.54	0.75	0.25	178.6	1.6
1130T10	257	1,800	176,000	6.00	2.63	13.62	12.98	6.37	8.56	7.68	1.19	0.25	266.8	2.0
1140T10	370	1,650	253,000	7.25	2.63	15.12	14.63	7.20	10.00	7.91	1.19	0.25	392.4	2.5
1150T10	515	1,500	352,000	8.00	4.25	17.84	14.64	7.20	10.60	10.68	1.19	0.25	515.9	4.3
1160T10	724	1,350	495,000	9.00	4.75	19.74	15.83	7.80	12.00	10.98	1.19	0.25	698.9	6.2
1170T10	965	1,225	660,000	10.00	5.25	22.30	17.24	8.50	14.00	11.98	1.19	0.25	987.7	7.7
1180T10	1338	1,100	915,000	11.00	6.00	24.80	19.05	9.40	15.50	12.64	1.50	0.25	1364.7	8.3
1190T10	1770	1,050	1,210,000	12.00	6.00	26.60	20.64	10.20	17.20	12.80	1.50	0.25	1710.8	9.7
1200T10	2413	900	1,650,000	13.00	7.00	29.80	22.24	11.00	19.60	14.00	1.50	0.25	2330.3	12.4

Consult Martin for higher speeds.
Max. bores listed fit standard recommended keys per ANSI B17.1

Stock
T20 Cover Design

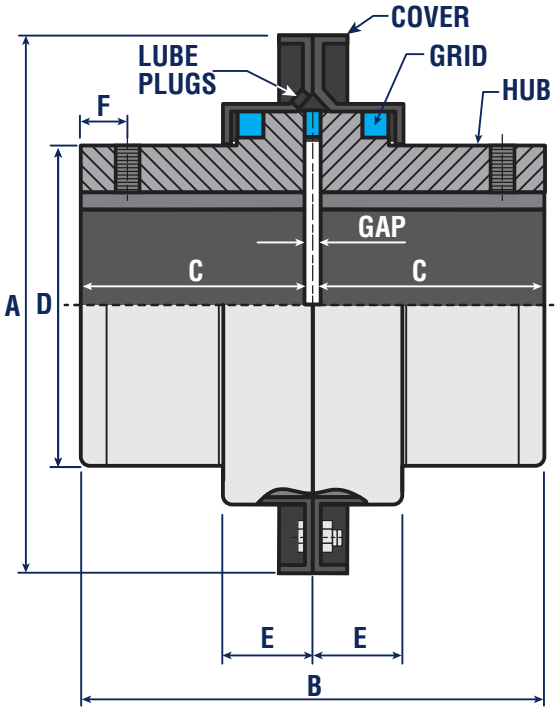

Martin Blue-Flex® Grid Coupling – T20 Style

Coupling Size	HP per 100 RPM	Max Speed (RPM)	Basic Torque (lb-in)	Bore Dia.		Dimensions (in)						Gap (in)	Complete Weight (lb)	Lub. Wt. (lb)
				Max.	Min.	A	B	C	D	E	F	Normal		
1020T20	0.68	6000	460	1.12	0.50	4.37	3.86	1.87	1.56	0.95	0.31	0.12	4.4	0.1
1030T20	1.93	6000	1,320	1.37	0.50	4.75	3.86	1.87	1.94	0.98	0.31	0.12	5.7	0.1
1040T20	3.22	6000	2,200	1.62	0.50	5.06	4.12	2.00	2.25	1.01	0.31	0.12	7.5	0.1
1050T20	5.63	6000	3,850	1.87	0.50	5.81	4.87	2.37	2.63	1.23	0.31	0.12	11.9	0.1
1060T20	8.85	6000	6,050	2.12	0.75	6.40	5.12	2.50	3.00	1.27	0.31	0.12	16.1	0.2
1070T20	13	5500	8,800	2.50	0.75	6.81	6.12	3.00	3.44	1.33	0.50	0.12	22.9	0.2
1080T20	27	4750	18,150	3.00	1.06	7.87	7.12	3.50	4.13	1.74	0.50	0.12	39.0	0.4
1090T20	48	4000	33,000	3.50	1.06	8.42	7.87	3.87	4.87	1.88	0.63	0.12	56.0	0.6
1100T20	81	3250	55,550	4.00	1.63	10.50	9.67	4.75	5.59	2.36	0.63	0.18	93.0	0.9
1110T20	121	3000	82,500	4.50	1.63	11.25	10.18	5.00	6.31	2.53	0.75	0.18	119.9	1.1
1120T20	177	2700	121,000	5.00	2.37	12.56	11.98	5.87	7.06	2.89	0.75	0.25	179.9	1.6
1130T20	257	2400	176,000	6.00	2.63	14.87	12.98	6.37	8.56	2.96	1.19	0.25	270.1	2.0
1140T20	370	2200	253,000	7.25	2.63	16.38	14.63	7.20	10.00	3.08	1.19	0.25	397.1	2.5
1150T20	515	2000	352,000	8.00	4.25	18.75	14.64	7.20	10.60	4.21	1.19	0.25	507.1	4.3
1160T20	724	1750	495,000	9.00	4.75	21.00	15.83	7.80	12.00	4.50	1.19	0.25	707.9	6.2
1170T20	965	1600	660,000	10.00	5.25	23.00	17.24	8.50	14.00	4.70	1.19	0.25	988.1	7.7
1180T20	1,338	1400	915,000	11.00	6.00	24.80	19.04	9.40	15.50	5.12	1.50	0.25	1302.9	8.3
1190T20	1,770	1300	1,210,000	12.00	6.00	26.97	20.64	10.20	17.20	5.31	1.50	0.25	1677.7	9.7
1200T20	2,413	1100	1,650,000	13.00	7.00	29.02	22.24	11.00	19.60	5.71	1.50	0.25	2250.9	12.4

Consult Martin for higher speeds.
Max. bores listed fit standard recommended keys per ANSI B17.1

Stock
T31 Spacer Design

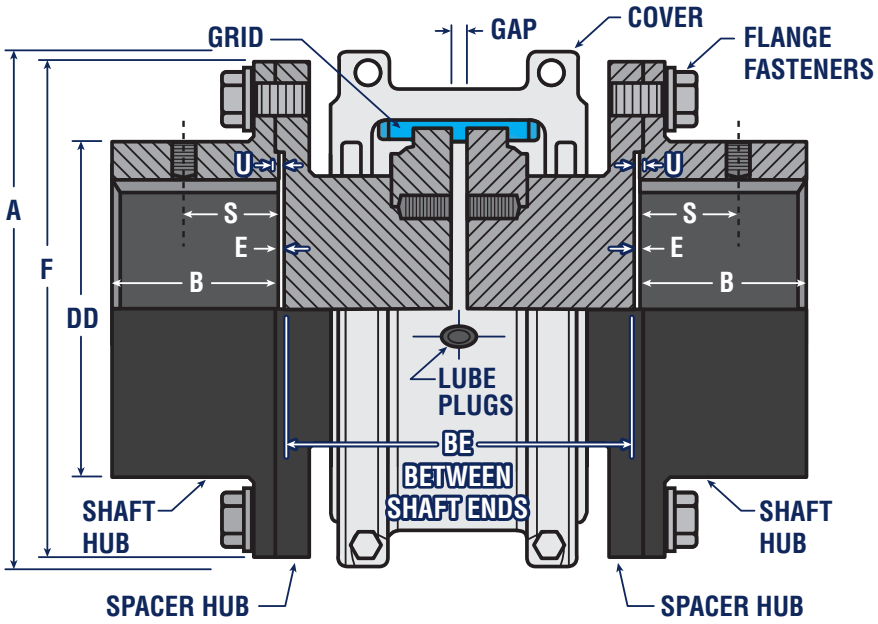

Martin Blue-Flex® Grid Coupling – T31 Style

Coupling Size	Torque Rating (in-lb)*	Allow Speed RPM**	Bore		A	B	BE		E	F	S	U	GAP	Flange Fasteners		Wt Without Bore & Min BE (lb)	Wt Added per inch of BE over Min (lb)	Lube Wt (lb)
			Max	Min ***			Min	Max						No. per Flange & Grade	Dia (in)			
1020T	460	3,600	1.38	0.5	3.82	1.38	3.5	8	0.03	3.38	1.08	0.08	0.19	4, GR 8	0.25	8.5	0.57	0.06
1030T	1,320	3,600	1.63	0.5	4.16	1.62	3.5	8.5	0.03	3.69	1.24	0.08	0.19	8, GR 8	0.25	11.5	0.87	0.09
1040T	2,200	3,600	2.13	0.5	4.5	2.12	3.5	8.5	0.03	4.44	1.08	0.08	0.19	8, GR 8	0.25	18.6	1.17	0.12
1050T	3,850	3,600	2.38	0.5	5.32	2.38	4.37	8.5	0.03	4.94	1.6	0.08	0.19	8, GR 8	0.31	28.2	1.58	0.15
1060T	6,050	3,600	2.88	0.75	5.82	2.88	4.81	13	0.06	5.69	1.7	0.11	0.19	8, GR 8	0.38	45.1	2.06	0.19
1070T	8,800	3,600	3.13	0.75	6.25	3.12	5	13	0.06	6	1.84	0.11	0.19	12, Gr 8	0.38	54.6	2.69	0.25
1080T	18,150	3,600	3.50	1.06	7.5	3.5	6.12	16	0.06	7	1.96	0.11	0.19	12, Gr 8	0.5	88.1	3.86	0.38
1090T	33,000	3,600	4	1.06	8.31	4	6.44	16	0.06	8.25	2.24	0.11	0.19	12, Gr 8	0.63	132	5.37	0.56
1100T	55,550	2,440	4.75	1.5	9.88	3.56	8	16	0.06	9.88	–	0.12	0.25	12, Gr 8	0.75	199	6.95	0.94
1110T	82,500	2,250	5.50	2	10.62	4.1	8.25	16	0.06	10.88	–	0.12	0.25	12, Gr 8	0.75	261	8.98	1.12
1120T	121,000	2,025	6.25	2.5	12.12	4.7	9.69	16	0.06	12.56	–	0.16	0.38	12, Gr 8	0.88	392	11.2	1.62
1130T	176,000	1,800	7	3	13.62	5.3	10.12	16	0.06	13.62	–	0.16	0.38	12, Gr 8	1	522	16.5	2
1140T	253,000	1,650	8	3.5	15.12	6	10.5	16	0.06	15.19	–	0.16	0.38	12, Gr 8	1.13	720	22.4	2.5

* Peak torque capacity is two times the published rating. Torque ratings for hubs with bushings differ from those shown, refer to Table 9, page C48.

** Consult Martin for higher speeds..

*** Minimum bore is the smallest bore to which a Rough Stock Bore (RSB) hub can be bored. Depending upon coupling size, RSB hubs may have only a blind centering hole or a through hole that will permit remachining of the hubs to the minimum bores specified.

Spacer Selection Guide

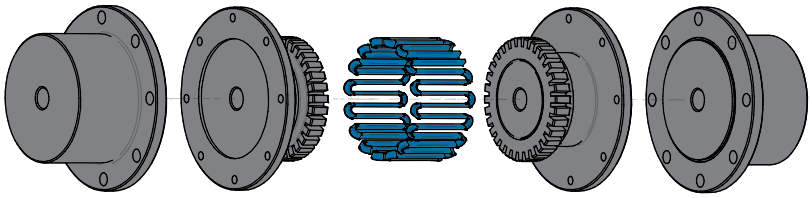

Full Spacer Type T31 Application Shaft Separation – DBSE (Distance Between Shaft Ends)

DBSE	Spacer Hubs	1020T	1030T	1040T	1050T	1060T	1070T	1080T	1090T	1100T	1110T
3.500	Hub 1	1.625	1.625	1.625							
	Hub 2	1.625	1.625	1.625							
3.938	Hub 1	1.625	1.625	1.625							
	Hub 2	2.062	2.062	2.062							
4.250	Hub 1	1.625	1.625	1.625							
	Hub 2	2.375	2.375	2.375							
4.375	Hub 1	2.062	2.062	2.062	2.062						
	Hub 2	2.062	2.062	2.062	2.062						
4.688	Hub 1	2.062	2.062	2.062	2.062						
	Hub 2	2.375	2.375	2.375	2.375						
5.000	Hub 1	2.375	2.375	2.375	2.375	2.344	2.344				
	Hub 2	2.375	2.375	2.375	2.375	2.344	2.344				
5.219	Hub 1			1.625							
	Hub 2			3.344							
5.375	Hub 1		1.625	1.625							
	Hub 2		3.500	3.500							
5.510	Hub 1	2.631	2.631	2.631	2.631	2.600	2.600				
	Hub 2	2.631	2.631	2.631	2.631	2.600	2.600				
5.656	Hub 1		2.062	2.062	2.062						
	Hub 2		3.344	3.344	3.344						
5.813	Hub 1		2.062	2.062	2.062						
	Hub 2		3.500	3.500	3.500						
5.969	Hub 1		2.375	2.375	2.375						
	Hub 2		3.344	3.344	3.344						
6.125	Hub 1		2.375	2.375	2.375	2.344	2.344				
	Hub 2		3.500	3.500	3.500	3.469	3.469				
6.938	Hub 1	3.344	3.344	3.344	3.344	3.312					
	Hub 2	3.344	3.344	3.344	3.344	3.312					
7.000	Hub 1						3.344	3.344			
	Hub 2						3.344	3.344			
7.094	Hub 1			3.344	3.344		3.387	3.387	3.387		
	Hub 2			3.500	3.500		3.387	3.387	3.387		
7.250	Hub 1		3.500	3.500	3.500	3.469	3.469	3.469	3.469		
	Hub 2		3.500	3.500	3.500	3.469	3.469	3.469	3.469		
8.000	Hub 1									3.812	
	Hub 2									3.812	
8.593	Hub 1							3.469			
	Hub 2							4.812			
8.625	Hub 1					2.344	2.344				
	Hub 2					5.696	5.696				
8.875	Hub 1									3.812	
	Hub 2									4.688	
9.750	Hub 1					3.469	3.469	3.469	3.469	4.688	4.688
	Hub 2					5.969	5.969	5.969	5.969	4.688	4.688
9.938	Hub 1							4.812		4.733	4.733
	Hub 2							4.812		4.733	4.733
11.093	Hub 1							4.812			
	Hub 2							5.969			
12.250	Hub 1					5.969	5.969	5.969	5.969	5.938	
	Hub 2					5.969	5.969	5.969	5.969	5.938	
14.049	Hub 1										6.837
	Hub 2										6.837

Stock
T35 Spacer Design

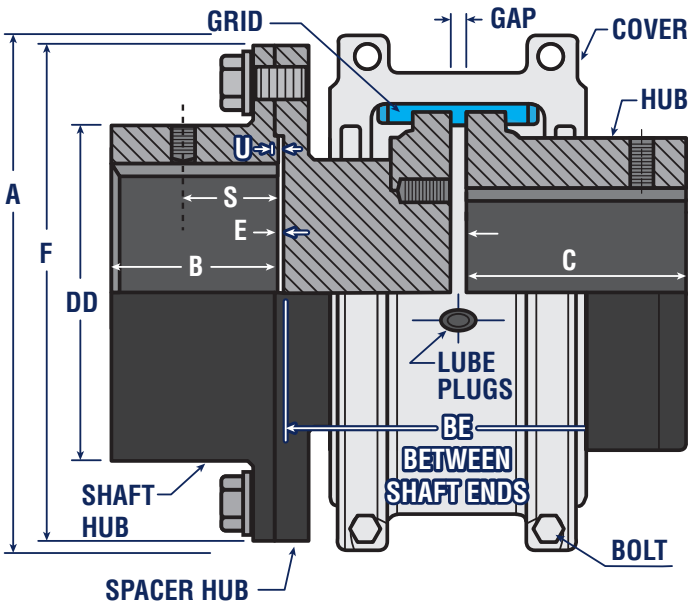

Martin Blue-Flex® Grid Coupling – T35 Style

Coupling Size	Torque Rating (in-lb)*	Allow Speed RPM**	Max Bore		Min Bore ***	A	B	BE		E	F	S	U	GAP	Flange Fasteners		Wt Without Bore & Min BE (lb)	Wt Added per inch of BE over Min (lb)	Lube Wt (lb)
			Shaft Hub	Hub				Min	Max						No. per Flange & Grade	Dia (in)			
1020T	460	3,600	1.38	1.13	0.5	3.82	1.38	1.78	4.03	0.03	3.38	1.08	0.08	0.19	4, GR 8	0.25	8.5	0.57	0.06
1030T	1,320	3,600	1.63	1.38	0.5	4.16	1.62	1.78	4.28	0.03	3.69	1.24	0.08	0.19	8, GR 8	0.25	11.5	0.87	0.09
1040T	2,200	3,600	2.13	1.63	0.5	4.5	2.12	1.78	4.28	0.03	4.44	1.08	0.08	0.19	8, GR 8	0.25	18.6	1.17	0.12
1050T	3,850	3,600	2.38	1.88	0.5	5.32	2.38	2.22	4.28	0.03	4.94	1.6	0.08	0.19	8, GR 8	0.31	28.2	1.58	0.15
1060T	6,050	3,600	2.88	2.13	0.75	5.82	2.88	2.44	6.53	0.06	5.69	1.7	0.11	0.19	8, GR 8	0.38	45.1	2.06	0.19
1070T	8,800	3,600	3.13	2.5	0.75	6.25	3.12	2.53	6.53	0.06	6	1.84	0.11	0.19	12, Gr 8	0.38	54.6	2.69	0.25
1080T	18,150	3,600	3.5	3	1.06	7.5	3.5	3.09	8.03	0.06	7	1.96	0.11	0.19	12, Gr 8	0.5	88.1	3.86	0.38
1090T	33,000	3,600	4	3.5	1.06	8.31	4	3.25	8.03	0.06	8.25	2.24	0.11	0.19	12, Gr 8	0.63	132	5.37	0.56
1100T	55,550	2,440	4.75	4	1.63	9.88	3.56	4.06	8.06	0.06	9.88	–	0.12	0.25	12, Gr 8	0.75	199	6.95	0.94
1110T	82,500	2,250	5.5	4.5	1.63	10.62	4.1	4.19	8.06	0.06	10.88	–	0.12	0.25	12, Gr 8	0.75	261	8.98	1.12
1120T	121,000	2,025	6.25	5	2.38	12.12	4.7	4.91	8.06	0.06	12.56	–	0.16	0.38	12, Gr 8	0.88	392	11.2	1.62
1130T	176,000	1,800	7	6	2.63	13.62	5.3	5.12	8.06	0.06	13.62	–	0.16	0.38	12, Gr 8	1	522	16.5	2
1140T	253,000	1,650	8	7.25	2.63	15.12	6	5.31	8.06	0.06	15.19	–	0.16	0.38	12, Gr 8	1.13	720	22.4	2.5

* Peak torque capacity is two times the published rating. Torque ratings for hubs with bushings differ from those shown, refer to Table 9, page C48.
** Consult Martin for higher speeds..
*** Minimum bore is the smallest bore to which a Rough Stock Bore (RSB) hub can be bored. Depending upon coupling size, RSB hubs may have only a blind centering hole or a through hole that will permit remachining of the hubs to the minimum bores specified.

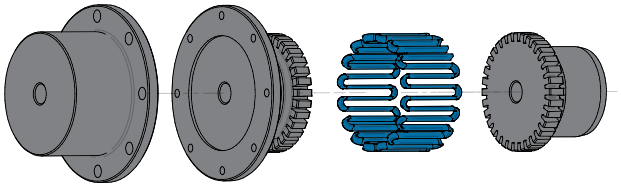

Half Spacer Type T35 Application Shaft Separation – DBSE (Distance Between Shaft Ends)

DBSE	Spacer Hub 1 side only	Half Spacer type T35 Application Shaft Separation DBSE (Distance Between Shaft Ends)									
		1020T	1030T	1040T	1050T	1060T	1070T	1080T	1090T	1100T	1110T
1.781	Hub 1	1.625	1.625	1.625							
	Hub 2	STD	STD	STD							
2.219	Hub 1	2.062	2.062	2.062	2.062						
	Hub 2	STD	STD	STD	STD						
2.531	Hub 1	2.375	2.375	2.375	2.375	2.344	2.344				
	Hub 2	STD	STD	STD	STD	STD	STD				
3.500	Hub 1	3.344	3.344	3.344	3.344	3.312					
	Hub 2	STD	STD	STD	STD	STD					
3.531	Hub 1						3.344	3.344			
	Hub 2						STD	STD			
3.656	Hub 1			3.500	3.500	3.469	3.469	3.469	3.469		
	Hub 2			STD	STD	STD	STD	STD	STD		
4.062	Hub 1									3.812	
	Hub 2									STD	
4.938	Hub 1									4.688	4.688
	Hub 2									STD	STD
5.000	Hub 1							4.812		4.733	4.733
	Hub 2							STD		STD	STD
6.156	Hub 1					5.969	5.969	5.969	5.969		
	Hub 2					STD	STD	STD	STD		
6.188	Hub 1									5.938	
	Hub 2									STD	
7.090	Hub 1										6.837
	Hub 2										STD

Bore-To-Size Hubs

Blue-Flex® Bored-To-Size Hubs with Finished Bore, Keyway, and 2 Set Screw

Bore Size	Keyway (Inches)	Part Number by Coupling Size							
		1020T	1030T	1040T	1050T	1060T	1070T	1080T	1090T
Plain Bore		1020T-HUB	1030T-HUB	1040T-HUB	1050T-HUB	1060T-HUB	1070T-HUB	1080T-HUB	1090T-HUB
Inches									
1/2	1/8 x 1/16	1020T-HUB1/2	—	—	—	—	—	—	—
5/8	3/16 x 3/32	1020T-HUB5/8	1030T-HUB5/8	1040T-HUB5/8	—	—	—	—	—
3/4	3/16 x 3/32	1020T-HUB3/4	1030T-HUB3/4	1040T-HUB3/4	1050T-HUB3/4	1060T-HUB3/4	—	—	—
7/8	3/16 x 3/32	1020T-HUB7/8	1030T-HUB7/8	1040T-HUB7/8	1050T-HUB7/8	1060T-HUB7/8	—	—	—
15/16	1/4 x 1/8	1020T-HUB15/16	1030T-HUB15/16	1040T-HUB15/16	1050T-HUB15/16	1060T-HUB15/16	—	—	—
1	1/4 x 1/8	1020T-HUB1	1030T-HUB1	1040T-HUB1	1050T-HUB1	1060T-HUB1	1070T-HUB1	—	—
1 1/8	1/4 x 1/8	1020T-HUB1 1/8	1030T-HUB1 1/8	1040T-HUB1 1/8	1050T-HUB1 1/8	1060T-HUB1 1/8	1070T-HUB1 1/8	1080T-HUB1 1/8	—
1 3/16	1/4 x 1/8	—	1030T-HUB1 3/16	1040T-HUB1 3/16	1050T-HUB1 3/16	1060T-HUB1 3/16	1070T-HUB1 3/16	—	—
1 1/4	1/4 x 1/8	—	1030T-HUB1 1/4	1040T-HUB1 1/4	1050T-HUB1 1/4	1060T-HUB1 1/4	1070T-HUB1 1/4	1080T-HUB1 1/4	—
1 3/8	5/16 x 5/32	—	1030T-HUB1 3/8	1040T-HUB1 3/8	1050T-HUB1 3/8	1060T-HUB1 3/8	1070T-HUB1 3/8	1080T-HUB1 3/8	1090T-HUB1 3/8
1 7/16	3/8 x 3/16	—	—	1040T-HUB1 716	1050T-HUB1 716	1060T-HUB1 7/6	1070T-HUB1 716	1080T-HUB1 716	1090T-HUB1 7/16
1 1/2	3/8 x 3/16	—	—	1040T-HUB1 1/2	1050T-HUB1 1/2	1060T-HUB1 1/2	1070T-HUB1 1/2	1080T-HUB1 1/2	1090T-HUB1 1/2
1 9/16	3/8 x 3/16	—	—	1040T-HUB1 9/16	1050T-HUB1 9/16	1060T-HUB1 9/16	1070T-HUB1 9/16	1080T-HUB1 9/16	—
1 5/8	3/8 x 3/16	—	—	1040T-HUB1 5/8	1050T-HUB1 5/8	1060T-HUB1 5/8	1070T-HUB1 5/8	1080T-HUB1 5/8	1090T-HUB1 5/8
1 11/16	3/8 x 3/16	—	—	—	1050T-HUB1 11/16	1060T-HUB1 11/16	1070T-HUB1 11/16	1080T-HUB1 11/16	1090T-HUB1 11/16
1 3/4	3/8 x 3/16	—	—	—	1050T-HUB1 3/4	1060T-HUB1 3/4	1070T-HUB1 3/4	1080T-HUB1 3/4	1090T-HUB1 3/4
1 13/16	1/2 x 1/4	—	—	—	1050T-HUB1 13/16	1060T-HUB1 13/16	1070T-HUB1 13/16	1080T-HUB1 13/16	1090T-HUB1 13/16
1 7/8	1/2 x 1/4	—	—	—	1050T-HUB1 7/8	1060T-HUB1 7/8	1070T-HUB1 7/8	1080T-HUB1 7/8	1090T-HUB1 7/8
1 15/16	1/2 x 1/4	—	—	—	—	1060T-HUB1 15/16	1070T-HUB1 15/16	1080T-HUB1 15/16	1090T-HUB1 15/16
2	1/2 x 1/4	—	—	—	—	1060T-HUB2	1070T-HUB2	1080T-HUB2	1090T-HUB2
2 1/8	1/2 x 1/4	—	—	—	—	1060T-HUB2 1/8	1070T-HUB2 1/8	1080T-HUB2 1/8	1090T-HUB2 1/8
2 3/16	1/2 x 1/4	—	—	—	—	—	1070T-HUB2 3/16	1080T-HUB2 3/16	1090T-HUB2 3/16
2 1/4	1/2 x 1/4	—	—	—	—	—	1070T-HUB2 1/4	1080T-HUB2 1/4	1090T-HUB2 1/4
2 3/8	5/8 x 5/16	—	—	—	—	—	1070T-HUB2 3/8	1080T-HUB2 3/8	1090T-HUB2 3/8
2 7/16	5/8 x 5/16	—	—	—	—	—	1070T-HUB2 7/16	1080T-HUB2 7/16	1090T-HUB2 7/16
2 1/2	5/8 x 5/16	—	—	—	—	—	1070T-HUB2 1/2	1080T-HUB2 1/2	1090T-HUB2 1/2
2 5/8	5/8 x 5/16	—	—	—	—	—	—	1080T-HUB2 5/8	1090T-HUB2 5/8
2 11/16	5/8 x 5/16	—	—	—	—	—	—	1080T-HUB2 11/16	1090T-HUB2 11/16
2 3/4	5/8 x 5/16	—	—	—	—	—	—	1080T-HUB2 3/4	1090T-HUB2 3/4
2 7/8	3/4 x 3/8	—	—	—	—	—	—	1080T-HUB2 7/8	1090T-HUB2 7/8
2 15/16	3/4 x 3/8	—	—	—	—	—	—	1080T-HUB2 15/16	1090T-HUB2 15/16
3	3/4 x 3/8	—	—	—	—	—	—	1080T-HUB3	1090T-HUB3
3 1/8	3/4 x 3/8	—	—	—	—	—	—	—	1090T-HUB3 1/8
3 1/4	3/4 x 3/8	—	—	—	—	—	—	—	1090T-HUB3 1/4
3 3/8	7/8 x 7/16	—	—	—	—	—	—	—	1090T-HUB3 3/8
3 7/16	7/8 x 7/16	—	—	—	—	—	—	—	1090T-HUB3 7/16
3 1/2	7/8 x 7/16	—	—	—	—	—	—	—	1090T-HUB3 1/2
Taper Bushed		—	1030T-HUB1108	1040T-HUB1108	1050T-HUB1215	1060T-HUB1615	1070T-HUB2012	1080T-HUB2525	1090T-HUB3030
Metric									
14	5 x 2.3	1020T-HUB14MM	—	—	—	—	—	—	—
15	5 x 2.3	1020T-HUB15MM	—	—	—	—	—	—	—
16	5 x 2.3	1020T-HUB16MM	—	—	—	—	—	—	—
19	6 x 2.8	1020T-HUB19MM	1030T-HUB19MM	—	—	—	—	—	—
20	6 x 2.8	1020T-HUB20MM	1030T-HUB20MM	—	—	—	—	—	—
22	6 x 2.8	1020T-HUB22MM	1030T-HUB22MM	—	—	—	—	—	—
24	8 x 3.3	1020T-HUB24MM	1030T-HUB24MM	1040T-HUB24MM	—	—	—	—	—
25	8 x 3.3	1020T-HUB25MM	1030T-HUB25MM	1040T-HUB25MM	—	—	—	—	—
28	8 x 3.3	—	1030T-HUB28MM	1040T-HUB28MM	1050T-HUB28MM	—	—	—	—
30	8 x 3.3	—	1030T-HUB30MM	1040T-HUB30MM	1050T-HUB30MM	—	—	—	—
32	10 x 3.3	—	1030T-HUB32MM	1040T-HUB32MM	1050T-HUB32MM	1060T-HUB32MM	—	—	—
35	10 x 3.3	—	1030T-HUB35MM	1040T-HUB35MM	1050T-HUB35MM	1060T-HUB35MM	1070T-HUB35MM	—	—
38	10 x 3.3	—	—	1040T-HUB38MM	1050T-HUB38MM	1060T-HUB38MM	1070T-HUB38MM	1080T-HUB38MM	—
40	12 x 3.3	—	—	—	—	1060T-HUB40MM	1070T-HUB40MM	—	—
42	12 x 3.3	—	—	1040T-HUB42MM	1050T-HUB42MM	1060T-HUB42MM	1070T-HUB42MM	1080T-HUB42MM	1090T-HUB42MM
45	14 x 3.8	—	—	—	—	1060T-HUB45MM	1070T-HUB45MM	—	—
48	14 x 3.8	—	—	—	1050T-HUB48MM	1060T-HUB48MM	1070T-HUB48MM	1080T-HUB48MM	1090T-HUB48MM
50	14 x 3.8	—	—	—	—	1060T-HUB50MM	—	—	—
55	16 x 4.3	—	—	—	—	1060T-HUB55MM	1070T-HUB55MM	1080T-HUB55MM	1090T-HUB55MM
60	18 x 4.4	—	—	—	—	—	—	1080T-HUB60MM	—
65	18 x 4.4	—	—	—	—	—	—	—	1090T-HUB65MM
70	20 x 4.9	—	—	—	—	—	—	1080T-HUB70MM	1090T-HUB70MM
80	22 x 5.4	—	—	—	—	—	—	1080T-HUB80MM	1090T-HUB80MM
85	22 x 5.4	—	—	—	—	—	—	—	1090T-HUB85MM

Spacer and Shaft Hubs

Spacer Hubs

Shaft Hubs
Plain Bore and Finished Bore with Keyway, and 2 Set Screws Taper Bushed Available

Spacer Length	Part Number by Coupling Size									
	1020T	1030T	1040T	1050T	1060T	1070T	1080T	1090T	1100T	1110T
1.625	1020T-CL1.6250	1030T-CL1.6250	1040T-CL1.6250							
2.0620	1020T-CL2.0620	1030T-CL2.0620	1040T-CL2.0620	1050T-CL2.0620						
2.3440					1060T-CL2.3440	1070T-CL2.3440	1080T-CL3.3440			
2.3750	1020T-CL2.3750	1030T-CL2.3750	1040T-CL2.3750	1050T-CL2.3750						
2.6000					1060T-CL2.6000	1070T-CL2.6000				
2.6310	1020T-CL2.6310	1030T-CL2.6310	1040T-CL2.6310	1050T-CL2.6310						
3.3120					1060T-CL3.3120					
3.3440	1020T-CL3.3440	1030T-CL3.3440	1040T-CL3.3440	1050T-CL3.3440		1070T-CL3.3440				
3.3870						1070T-CL3.3870	1080T-CL3.3870	1090T-CL3.3870		
3.4690					1060T-CL3.4690	1070T-CL3.4690	1080T-CL3.4690	1090T-CL3.4690		
3.5000		1030T-CL3.5000	1040T-CL3.5000	1050T-CL3.5000						
3.8120									1100T-CL3.8120	
4.6880									1100T-CL4.6880	1110T-CL4.6880
4.7330									1100T-CL4.7330	1110T-CL4.7330
4.8120							1080T-CL4.8120			
5.2620									1100T-CL5.2620	
5.3250							1080T-CL5.3250	1090T-CL5.3250		
5.9375									1100T-CL5.9375	
5.9690					1060T-CL5.9690	1070T-CL5.9690	1080T-CL5.9690	1090T-CL5.9690		
6.8370										1110T-CL6.8370
6.9000								1090T-CL6.9000		

Blue-Flex® Shaft Hubs with Plain Bore and Finished Bore (with Keyway, and 2 Set Screws)

Bore Size	Keyway (Inches)	Part Number by Coupling Size									
		1020T	1030T	1040T	1050T	1060T	1070T	1080T	1090T	1100T	1110T
Plain Bore		1020T-SH	1030T-SH	1040T-SH	1050T-SH	1060T-SH	1070T-SH	1080T-SH	1090T-SH	1100T-SH	1110T-SH
1/2	1/8 x 1/16	1020T-SH1/2									
5/8	3/16 x 3/32	1020T-SH5/8	1030T-SH5/8					**Bore Size**	**1120T**	**1130T**	**1140T**
3/4	3/16 x 3/32	1020T-SH3/4	1030T-SH3/4	1040T-SH3/4				Plain Bore	1120T-SH	1130T-SH	1140T-SH
7/8	3/16 x 3/32	1020T-SH7/8	1030T-SH7/8	1040T-SH7/8							
1	1/4 x 1/8	1020T-SH1	1030T-SH1	1040T-SH1	1050T-SH1						
1 1/8	1/4 x 1/8	1020T-SH1 1/8	1030T-SH1 1/8	1040T-SH1 1/8	1050T-SH1 1/8	1060T-SH1 1/8					
1 1/4	1/4 x 1/8	1020T-SH1 1/4	1030T-SH1 1/4	1040T-SH1 1/4	1050T-SH1 1/4	1060T-SH1 1/4					
1 3/8	5/16 x 5/32	1020T-SH1 3/8	1030T-SH1 3/8	1040T-SH1 3/8	1050T-SH1 3/8	1060T-SH1 3/8	1070T-SH1 3/8				
1 1/2	3/8 x 3/16		1030T-SH1 1/2	1040T-SH1 1/2	1050T-SH1 1/2	1060T-SH1 1/2	1070T-SH1 1/2				
1 5/8	3/8 x 3/16		1030T-SH1 5/8	1040T-SH1 5/8	1050T-SH1 5/8	1060T-SH1 5/8	1070T-SH1 5/8	1080T-SH1 5/8		1100T-SH1 5/8	
1 3/4	3/8 x 3/16			1040T-SH1 3/4	1050T-SH1 3/4	1060T-SH1 3/4	1070T-SH1 3/4	1080T-SH1 3/4			
1 7/8	1/2 x 1/4			1040T-SH1 7/8	1050T-SH1 7/8	1060T-SH1 7/8	1070T-SH1 7/8	1080T-SH1 7/8	1090T-SH1 7/8		
2	1/2 x 1/4			1040T-SH2	1050T-SH2	1060T-SH2	1070T-SH2	1080T-SH2	1090T-SH2		
2 1/8	1/2 x 1/4			1040T-SH2 1/8	1050T-SH2 1/8	1060T-SH2 1/8	1070T-SH2 1/8	1080T-SH2 1/8	1090T-SH2 1/8		
2 1/4	1/2 x 1/4				1050T-SH2 1/4	1060T-SH2 1/4	1070T-SH2 1/4	1080T-SH2 1/4	1090T-SH2 1/4		
2 3/8	5/8 x 5/16				1050T-SH2 3/8	1060T-SH2 3/8	1070T-SH2 3/8	1080T-SH2 3/8	1090T-SH2 3/8		
2 1/2	5/8 x 5/16					1060T-SH2 1/2	1070T-SH2 1/2	1080T-SH2 1/2	1090T-SH2 1/2		
2 5/8	5/8 x 5/16					1060T-SH2 5/8	1070T-SH2 5/8	1080T-SH2 5/8	1090T-SH2 5/8		
2 7/8	3/4 x 3/8					1060T-SH2 7/8	1070T-SH2 7/8	1080T-SH2 7/8	1090T-SH2 7/8		
3	3/4 x 3/8						1070T-SH3	1080T-SH3	1090T-SH3	1100T-SH3	1110T-SH3
3 1/8	3/4 x 3/8							1080T-SH3 1/8	1090T-SH3 1/8		
3 1/4	3/4 x 3/8							1080T-SH3 1/4	1090T-SH3 1/4		
3 3/8	7/8 x 7/16							1080T-SH3 3/8	1090T-SH3 3/8	1100T-SH3 3/8	
3 1/2	7/8 x 7/16								1090T-SH3 1/2		
3 5/8	7/8 x 7/16								1090T-SH3 5/8		
3 7/8	1 x 1/2								1090T-SH3 7/8		
4	1 x 1/2								1090T-SH4	1100T-SH4	

Components

Plain Bore Hubs
1-Day Rebore Available

Bored-To-Size Hubs
Finished Bore, Keyway, and 2 Set Screws
Taper Bushed Available

Blue-Flex® Grid

Coupling Size	Part Number
1020T	1020T-GRID
1030T	1030T-GRID
1040T	1040T-GRID
1050T	1050T-GRID
1060T	1060T-GRID
1070T	1070T-GRID
1080T	1080T-GRID
1090T	1090T-GRID
1100T	1100T-GRID
1110T	1110T-GRID
1120T	1120T-GRID
1130T	1130T-GRID
1140T	1140T-GRID
1150T	1150T-GRID
1160T	1160T-GRID
1170T	1170T-GRID
1180T	1180T-GRID
1190T	1190T-GRID
1200T	1200T-GRID

T10 Cover

T20 Cover

Fastener Sets

Seal & Gasket Kits

Blue-Flex® Parts and Kits

Coupling Size	T10 Cover Horizontal Split				T20 Cover Vertical Split for Higher RPM			
	Cover (Cover, Seals, Gaskets & Fasteners)	Cover Fastener Set	Seal Kit (Seal & Gasket)	Cover Grid Assemblies (Cover, Grid, Seals, Gaskets & Fasteners) *Includes Grease	Cover (Cover, Seals, Gaskets & Fasteners)	Cover Fastener Set	Seal Kit (Seal & Gasket)	Cover Grid Assemblies (Cover, Grid, Seals, Gaskets & Fasteners) *Includes Grease
1020T	1020T10-COV	1020T10-FAS	1020T10-SEAL	1020T10-SUBASY*	1020T20-COV	1020T20-FAS	1020T20-SEAL	1020T20-SUBASY*
1030T	1030T10-COV	1030T10-FAS	1030T10-SEAL	1030T10-SUBASY*	1030T20-COV	1030T20-FAS	1030T20-SEAL	1030T20-SUBASY*
1040T	1040T10-COV	1040T10-FAS	1040T10-SEAL	1040T10-SUBASY*	1040T20-COV	1040T20-FAS	1040T20-SEAL	1040T20-SUBASY*
1050T	1050T10-COV	1050T10-FAS	1050T10-SEAL	1050T10-SUBASY*	1050T20-COV	1050T20-FAS	1050T20-SEAL	1050T20-SUBASY*
1060T	1060T10-COV	1060T10-FAS	1060T10-SEAL	1060T10-SUBASY*	1060T20-COV	1060T20-FAS	1060T20-SEAL	1060T20-SUBASY*
1070T	1070T10-COV	1070T10-FAS	1070T10-SEAL	1070T10-SUBASY*	1070T20-COV	1070T20-FAS	1070T20-SEAL	1070T20-SUBASY*
1080T	1080T10-COV	1080T10-FAS	1080T10-SEAL	1080T10-SUBASY*	1080T20-COV	1080T20-FAS	1080T20-SEAL	1080T20-SUBASY*
1090T	1090T10-COV	1090T10-FAS	1090T10-SEAL	1090T10-SUBASY*	1090T20-COV	1090T20-FAS	1090T20-SEAL	1090T20-SUBASY*
1100T	1100T10-COV	1100T10-FAS	1100T10-SEAL	1100T10-SUBASY	1100T20-COV	1100T20-FAS	1100T20-SEAL	1100T20-SUBASY
1110T	1110T10-COV	1110T10-FAS	1110T10-SEAL	1110T10-SUBASY	1110T20-COV	1120T20-FAS	1110T20-SEAL	1110T20-SUBASY
1120T	1120T10-COV	1120T10-FAS	1120T10-SEAL	1120T10-SUBASY	1120T20-COV	1120T20-FAS	1120T20-SEAL	1120T20-SUBASY
1130T	1130T10-COV	1130T10-FAS	1130T10-SEAL	1130T10-SUBASY	1130T20-COV	1130T20-FAS	1130T20-SEAL	1130T20-SUBASY
1140T	1140T10-COV	1140T10-FAS	1140T10-SEAL	1140T10-SUBASY	1140T20-COV	1140T20-FAS	1140T20-SEAL	1140T20-SUBASY
1150T	1150T10-COV	1150T10-FAS	1150T10-SEAL	1150T10-SUBASY	1150T20-COV	1150T20-FAS	1150T20-SEAL	1150T20-SUBASY
1160T	1160T10-COV	1160T10-FAS	1160T10-SEAL	1160T10-SUBASY	1160T20-COV	1160T20-FAS	1160T20-SEAL	1160T20-SUBASY
1170T	1170T10-COV	1170T10-FAS	1170T10-SEAL	1170T10-SUBASY	1170T20-COV	1170T20-FAS	1170T20-SEAL	1170T20-SUBASY
1180T	1180T10-COV	1180T10-FAS	1180T10-SEAL	1180T10-SUBASY	1180T20-COV	1180T20-FAS	1180T20-SEAL	1180T20-SUBASY
1190T	1190T10-COV	1190T10-FAS	1190T10-SEAL	1190T10-SUBASY	1190T20-COV	1190T20-FAS	1190T20-SEAL	1190T20-SUBASY
1200T	1200T10-COV	1200T10-FAS	1200T10-SEAL	1200T10-SUBASY	1200T20-COV	1200T20-FAS	1200T20-SEAL	1200T20-SUBASY

Note: All Covers include Seal Kits

Table 8 – Type T Hub Bore Ranges with Square & Rectangular Keys

Size	Inches																Millimeters		
	Min Bore	For One Square Key			For One Rectangular Key						For Two Square Keys			For Two Rectangular Keys			Min Bore	Max Bore	
		Max Bore	Y=X		Max Bore	Y=X		Max Bore	Y=W/2		Max Bore	Y=X		Max Bore	Y=X			Std Bore Fits per Table 16	Int Fit per Table 16 w/Setscrew Over Keyway
			W	X		W	X		W	X		W	X		W	X			
1020T	0.500	1.125 •	0.250 •	0.125 •	1.187	0.250	0.093	1.250	0.250	0.062	–	–	–	–	–	–	13	28	24
1030T	0.500	1.375 •	0.312 •	0.156 •	1.437	0.375	0.125	1.562	0.375	0.062	–	–	–	–	–	–	13	35	30
1040T	0.500	1.625 •	0.375 •	0.187 •	1.750	0.375	0.125	1.750	0.375	0.062	–	–	–	–	–	–	13	43	38
1050T	0.500	1.875 •	0.500 •	0.250 •	2.000	0.500	0.187	2.125	0.500	0.125	–	–	–	–	–	–	13	50	45
1060T	0.750	2.125 •	0.500 •	0.250 •	2.250	0.500	0.187	2.375	0.625	0.125	–	–	–	–	–	–	20	56	50
1070T	0.750	2.500 •	0.625 •	0.312 •	2.687	0.625	0.218	2.875	0.750	0.125	–	–	–	–	–	–	20	67	60
1080T	1.062	3.000 •	0.750 •	0.375 •	3.250	0.750	0.250	3.375	0.875	0.187	–	–	–	–	–	–	27	80	75
1090T	1.062	3.500 •	0.875 •	0.437 •	3.750	0.875	0.312	3.875	1.000	0.250	–	–	–	–	–	–	27	95	90
1100T	1.625	4.000 •	1.000 •	0.500 •	4.250	1.000	0.375	4.500	1.000	0.250	–	–	–	–	–	–	42	110	100
1110T	1.625	4.500 •	1.000 •	0.500 •	4.625	1.250	0.437	5.000	1.250	0.250	–	–	–	–	–	–	42	120	110
1120T	2.375	5.000 •	1.250 •	0.625 •	5.375	1.250	0.437	5.750	1.500	0.250	–	–	–	–	–	–	61	140	120
1130T	2.625	6.000 •	1.500 •	0.750 •	6.500	1.500	0.500	6.500	1.500	0.250	–	–	–	–	–	–	67	170	150
1140T	2.625	7.000	1.750	0.875	7.250 •	1.750 •	0.750 •	7.750	2.000	0.500	–	–	–	–	–	–	67	200	180
1150T	4.250	7.500	1.750	0.875	8.000 •	2.000 •	0.750 •	–	–	–	–	–	–	–	–	–	108	215	190
1160T	4.750	8.500	2.000	1.000	9.000 •	2.000 •	0.750 •	–	–	–	–	–	–	–	–	–	121	240	215
1170T	5.250	9.750	2.500	1.250	10.000 •	2.500 •	0.875 •	–	–	–	10.750	1.750	0.875	11.000	1.750	0.750	134	280	240
1180T	6.000	10.750	2.500	1.250	11.000 •	2.500 •	0.875 •	–	–	–	12.000	1.750	0.875	12.250	2.000	0.750	153	300	260
1190T	6.000	11.750	3.000	1.500	12.000 •	3.000 •	1.000 •	–	–	–	13.000	2.000	1.000	13.250	2.000	0.750	153	336	290
1200T	7.000	12.750	3.000	1.500	13.000 •	3.000 •	1.000 •	–	–	–	14.000	2.500	1.250	14.250	2.500	0.875	178	360	320

Y = Shaft keyway depth; X = Hub keyway depth; W = Keyway width
• Maximum bores using standard recommended keys on Table 13.
◊ Consult Martin.

Table 9 – Taper Bushings for Type T Hubs

Coupling Size	M Hub			
	Taper Bushing			L (in)
	Catalog Part No.	Bore Range (in)	Torque (lb-in)	
1020T	–	–	–	–
1030T	1108	0.500 to 1.125	1,300	1.62
1040T	1108	0.500 to 1.125	1,300	1.62
1050T	1215	0.500 to 1.250	3,550	1.88
1060T	1615	0.500 to 1.625	4,300	2.12
1070T	2012	0.500 to 2.000	7,150	2.12
1080T	2525	0.750 to 2.500	11,300	2.62
1090T	3030	0.938 to 3.000	24,000	3.12
1100T	3030	0.938 to 3.000	24,000	3.50
1110T	3535	1.188 to 3.500	44,800	3.62
1120T	4040	1.438 to 4.000	77,300	4.38
1130T	4545	1.938 to 4.500	110,000	4.62
1140T	5050	2.438 to 5.000	126,000	5.12
1150T	5050	2.438 to 5.000	126,000	7.20
1160T	5050	2.438 to 5.000	126,000	7.80
1170T	7060	3.938 to 7.000	416,000	8.50
1180T	8065	4.438 to 8.000	456,000	9.40
1190T	8065	4.438 to 8.000	456,000	10.20
1200T	10085	7.000 to 10.000	869,000	11.00

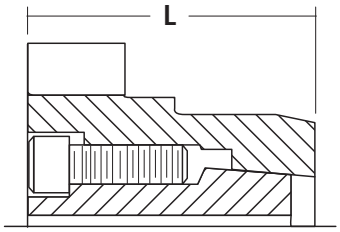

M Hub

Bushings require shaft keyways as calculated in Table 13.
Taper bores not recommended for shock load, reverse load, or 1.75+ coupling service factor applications.

Table 10 – WR² Values (lb-in²)

WR2 values are based on hubs with no bore; seals, lube plugs and gaskets are not considered.

Coupling Size	Coupling Type					
	T10	T20	T31		T35	
			WR^2 (Min DBSE)	WR^2 Added per inch of DBSE	WR^2 (Min DBSE)	WR^2 Added per inch of DBSE
1020T	4.83	5.32	9.8	0.18	7.3	0.18
1030T	7.61	7.99	15.3	0.42	11.5	0.42
1040T	11.19	11.99	31.8	0.76	21.5	0.76
1050T	24.85	25.76	62	1.4	43.4	1.4
1060T	40.66	41.16	132	2.38	86.4	2.38
1070T	63.18	61.68	175	4.06	119	4.06
1080T	154	148	396	8.37	275	8.37
1090T	269	272	805	16.2	537	16.2
1100T	609	608	1756	27.2	1183	27.2
1110T	923	930	2726	45.4	1825	45.4
1120T	1755	1611	5341	70.9	3548	70.9
1130T	3378	3568	8563	153	5970	153
1140T	6306	6431	14871	283	10588	283
1150T	11922	11243	–	–	–	–
1160T	19876	20597	–	–	–	–
1170T	35621	35625	–	–	–	–
1180T	62553	63343	–	–	–	–
1190T	89359	90487	–	–	–	–
1200T	148676	150553	–	–	–	–

Table 11 – Type T Coupling Puller Bolt Holes (in)

Coupling Size	Coupling Type	
	B.C.	Tap Size (UNC)
1020T	1.531	#6-32 x 0.38
1030T	1.875	#6-32 x 0.38
1040T	2.125	#10-24 x 0.38
1050T	2.500	#10-24 x 0.38
1060T	2.875	0.250-20 x 0.38
1070T	3.312	0.250-20 x 0.38
1080T	3.937	0.250-20 x 0.38
1090T	4.562	0.3125-18 x 0.44
1100T	5.250	0.375-16 x 0.50
1110T	5.875	0.4375-14 x 0.62
1120T	6.625	0.4375-14 x 0.62
1130T	7.750	0.625-11 x 0.82
1140T	9.125	0.625-11 x 0.82
1150T	10.375	0.750-10 x 0.94
1160T	11.750	0.875-9 x 1.06
1170T	13.250	1.125-7 x 1.25
1180T	14.875	1.250-7 x 1.50
1190T	16.250	1.500-6 x 1.75
1200T	17.937	1.500-6 x 1.75

Table 12 – Reduced Max Bores Interference Fit & Setscrew Over Keyway — All Type M Couplings

Size	Bore
1020T	1.000
1030T	1.250
1040T	1.375
1050T	1.750
1060T	1.875
1070T	2.250
1080T	2.750
1090T	3.250
1100T	3.500
1110T	4.000

Size	Bore
1120T	4.500
1130T	5.500
1140T	6.500
1150T	7.000
1160T	8.000
1170T	9.000
1180T	9.750
1190T	10.750
1200T	11.750

Table 13 – Misalignment Capability (in)

Maximum life and minimum maintenance for the coupling and connected machinery will result if couplings are accurately aligned. Coupling life expectancy between initial alignment and maximum operating limits is a function of load, speed and lubrication. For applications requiring greater misalignment, refer application details to Martin.

Angular misalignment is expressed in degrees and as the difference between the value of X minus Y, as illustrated.

Parallel misalignment is the distance P between shaft center lines as shown.

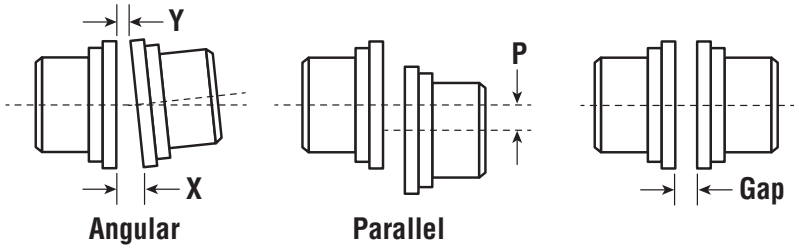

Coupling Size	Recommended Installation Maximum		Maximum Operating		Normal GAP +/- 10%	
	Parallel Offset -P	Angular (1/16°) X Minus Y	Parallel Offset -P	Angular (1/16°) X Minus Y	T10, T20, T35	T31
	T10, T20, T31, T35		T10, T20, T31, T35			
1020T	0.006	0.002	0.012	0.009	0.125	0.188
1030T	0.006	0.003	0.012	0.010	0.125	0.188
1040T	0.006	0.003	0.012	0.013	0.125	0.188
1050T	0.008	0.004	0.016	0.016	0.125	0.188
1060T	0.008	0.004	0.016	0.018	0.125	0.188
1070T	0.008	0.005	0.016	0.020	0.125	0.188
1080T	0.008	0.006	0.016	0.024	0.125	0.188
1090T	0.008	0.007	0.016	0.028	0.125	0.188
1100T	0.010	0.008	0.020	0.032	0.188	0.250
1110T	0.010	0.009	0.020	0.035	0.188	0.250
1120T	0.011	0.010	0.022	0.040	0.250	0.375
1130T	0.011	0.012	0.022	0.047	0.250	0.375
1140T	0.011	0.013	0.022	0.053	0.250	0.375
1150T	0.012	0.015	0.024	0.061	0.250	0.375
1160T	0.012	0.017	0.024	0.070	0.250	0.375
1170T	0.012	0.020	0.024	0.079	0.250	0.375
1180T	0.015	0.022	0.030	0.089	0.250	0.375
1190T	0.015	0.024	0.030	0.096	0.250	0.375
1200T	0.015	0.027	0.030	0.107	0.250	0.375

Table 14 – Recommended Commercial Keys for Bores with One Key (in/mm)

Inches (Per ANSI B17.1 Standard)											
Shaft Dia.		Key	Shaft Dia.		Key	Shaft Dia.		Key	Shaft Dia.		Key
Over	Through		Over	Through		Over	Through		Over	Through	
0.438	0.562	0.125 x 0.125	1.750	2.250	0.500 x 0.500	4.500	5.500	1.250 x 1.250	11.000	13.000	3.000 x 2.000
0.562	0.875	0.188 x 0.188	2.250	2.750	0.625 x 0.625	5.500	6.500	1.500 x 1.500	13.000	15.000	3.500 x 2.500
0.875	1.250	0.250 x 0.250	2.750	3.250	0.750 x 0.750	6.500	7.500	1.750 x 1.500	15.000	18.000	4.000 x 3.000
1.250	1.375	0.312 x 0.312	3.250	3.750	0.875 x 0.875	7.500	9.000	2.000 x 1.500	18.000	20.000	5.000 x 3.500
1.375	1.750	0.375 x 0.375	3.750	4.500	1.000 x 1.000	9.000	11.000	2.500 x 1.750	–	–	–
Millimeters (Per ISO R773 Standard)											
6	8	2 x 2	38	44	12 x 8	95	110	28 x 16	260	290	63 x 32
8	10	3 x 3	44	50	14 x 9	110	130	32 x 18	290	330	70 x 36
10	12	4 x 4	50	58	16 x 10	130	150	36 x 20	330	380	80 x 40
12	17	5 x 5	58	65	18 x 11	150	170	40 x 22	380	440	90 x 45
17	22	6 x 6	65	75	20 x 12	170	200	45 x 25	440	500	100 x 50
22	30	8 x 7	75	85	22 x 14	200	230	50 x 28	–	–	–
30	38	10 x 8	85	95	25 x 14	230	260	56 x 32	–	–	–

Table 15 – Standard Bore Fits — Unless Otherwise Specified

Model	Coupling Size	Coupling Type	Bore Fit
Blue-Flex® Grid Couplings	1020 - 1090	T10, T20	Clearance
	1100 and Larger	T10, T20	Interference

Table 16 – Recommended Bores for Steel Hubs (in)

Shaft Dia.	Clearance Fit		Interference Fit	
	Hub Bore	Clearance	Hub Bore	Interference
+.0000 - .0005	**+.0010 - .0000**	**.0000 .0015**	**+.0005 - .0000**	**.0000 .0010**
0.5000	0.5000		0.4990	
0.5625	0.5625		0.5615	
0.6250	0.6250		0.6240	
0.6875	0.6875		0.6865	
0.7500	0.7500		0.7490	
0.8125	0.8125		0.8115	
0.8750	0.8750		0.8740	
0.9375	0.9375		0.9365	
1.0000	1.0000		0.9990	
1.0625	1.0625		1.0615	
1.1250	1.1250		1.1240	
1.1875	1.1875		1.1865	
1.2500	1.2500		1.2490	
1.3125	1.3125		1.3115	
1.3750	1.3750		1.3740	
1.4375	1.4375		1.4365	
1.5000	1.5000		1.4990	
+.0000 - .0010	**+.0010 - .0000**	**.0000 .0020**	**+.0005 - .0000**	**.0000 .0015**
1.5625	1.5625		1.5610	
1.6250	1.6250		1.6235	
1.6875	1.6875		1.6860	
1.7500	1.7500		1.7485	
1.8125	1.8125		1.8110	
1.8750	1.8750		1.8735	
1.9375	1.9375		1.9360	
2.0000	2.0000		1.9985	
+.0000 - .0010	**+.0015 - .0000**	**.0000 .0025**	**+.0005 - .0000**	**.0000 .0015**
2.0625	2.0625		2.0610	
2.1250	2.1250		2.1235	
2.1875	2.1875		2.1860	
+.0000 - .0010	**+.0015 - .0000**	**.0000 .0025**	**+.0010 - .0000**	**.0000 .0020**
2.2500	2.2500		2.2480	
3.3125	2.3125		2.3105	
2.3750	2.3750		2.3730	
2.4375	2.4375		2.4355	
2.5000	2.5000		2.4980	
2.5625	2.5625		2.5605	
2.6250	2.6250		2.6230	
2.6875	2.6875		2.6855	
2.7500	2.7500		2.7480	
2.8125	2.8125		2.8105	
2.8750	2.8750		2.8730	
2.9375	2.9375		2.9355	
3.0000	3.0000		2.9980	

Shaft Dia.	Clearance Fit		Interference Fit	
	Hub Bore	Clearance	Hub Bore	Interference
+.0000 - .0010	**+.0015 - .0000**	**.0000 .0025**	**+.0010 - .0000**	**.0005 .0025**
3.0625	3.0625		3.0600	
3.1250	3.1250		3.1225	
3.1875	3.1875		3.1850	
3.2500	3.2500		3.2475	
3.3125	3.3125		3.3100	
3.3750	3.3750		3.3725	
3.4375	3.4375		3.4350	
3.5000	3.5000		3.4975	
3.5625	3.5625		3.5600	
3.6250	3.6250		3.6225	
3.6875	3.6875		3.6850	
3.7500	3.7500		3.7475	
3.8125	3.8125		3.8100	
3.8750	3.8750		3.8725	
3.9375	3.9375		3.9350	
4.0000	4.0000		3.9975	
+.0000 - .0010	**+.0015 - .0000**	**.0000 .0025**	**+.0015 - .0000**	**.0010 .0035**
4.0625	4.0625		4.0590	
4.1250	4.1250		4.1215	
4.1875	4.1875		4.1840	
4.2500	4.2500		4.2465	
4.3125	4.3125		4.3090	
4.3750	4.3750		4.3715	
4.4375	4.4375		4.4340	
4.5000	4.5000		4.4965	
4.5625	4.5625		4.5590	
4.6250	4.6250		4.6215	
4.6875	4.6875		4.6840	
4.7500	4.7500		4.7465	
4.8125	4.8125		4.8090	
4.8750	4.8750		4.8715	
4.9375	4.9375		4.9340	
5.0000	5.0000		4.9965	
5.0625	5.0625		5.0585	**.0015**
5.1250	5.1250		5.1210	**.0040**
5.1875	5.1875		5.1835	
5.2500	5.2500		5.2460	
5.3125	5.3125		5.3085	
5.3750	5.3750		5.3710	
5.4375	5.4375		5.4335	
5.5000	5.5000		5.4960	
5.5625	5.5625		5.5585	
5.6250	5.6250		5.6210	
5.6875	5.6875		5.6835	
5.7500	5.7500		5.7460	
5.8125	5.8125		5.8085	
5.8750	5.8750		5.8710	
5.9375	5.9375		5.9335	
6.0000	6.0000		5.9960	
6.2500	6.2500		6.2460	
6.5000	6.5000		6.4960	

Shaft Dia.	Interference Fit	
	Hub Bore	Interference
0000 - .0010	**+.0015 - .0000**	**.0015 .0040**
6.7500	6.7460	
7.0000	6.9960	
+.0000 - .0010	**+.0020 - .0000**	**.0020 .0050**
7.250	7.2450	
7.500	7.4950	
7.750	7.7450	
8.000	7.9950	
8.250	8.2445	**.0025**
8.500	8.4945	**.0055**
8.750	8.7445	
9.000	8.9945	
9.250	9.2440	**.0030**
9.500	9.4940	**.0060**
9.750	9.7440	
10.000	9.9940	
10.250	10.2435	**.0035**
10.500	10.4935	**.0065**
10.750	10.7435	
11.000	10.9935	
11.250	11.2430	**.0040**
11.500	11.4930	**.0070**
11.750	11.7430	
12.000	11.9930	
12.500	12.4925	**.0045**
13.000	12.9925	**.0075**
13.500	13.4920	**.0050**
14.000	13.9920	**.0080**
14.500	14.4915	**.0055**
15.000	14.9915	**.0085**
+.000 - .001	**+.0025 - .0000**	**.0055 .0090**
15.500	15.4910	
16.000	15.9910	
16.500	16.4905	**.0060**
17.000	16.9905	**.0095**
17.500	17.4895	.0070
18.000	17.9895	.0105
18.500	18.4890	.0075
19.000	18.9890	.0110
19.500	19.4880	.0085
20.000	19.9880	.0120

For shaft diameters larger than 20.000", use an average interference fit of 0.0005" per inch of shaft diameter within the following bore tolerances:

+.003, –.000 for over 20 to 30 dia. incl.
+.004, –.000 for over 30 to 40 dia. incl.

Tolerances and fits comply with, or are within, AGMA 9002 standard (Class 1 clearance fit).

Table 17 – Recommended Bores for Metric Shafts per ISO/R775–1969 (ANSI/AGMA 9112)

	Shaft Diameter	Clearance Fit		Transitional Fit		Interference Fit	
		Hub Bore	Fit*	Hub Bore	Fit*	Hub Bore	Fit*
MM	**j6**	**F7**	**+.008**	**H7**	**-.008**	**M6**	**-.023**
	+.008 / -.003	**+.016 / +.034**	**+.037**	**+.000 / +.018**	**+.021**	**-.015 / -.004**	**-.001**
12	0.4727 / 0.4724	0.4731 / 0.4737	+.0003	0.4725 / 0.4731	-.0003	0.4718 / 0.4723	-.0009
14	0.5515 / 0.5511	0.5518 / 0.5525	+.0015	0.5512 / 0.5519	+.0008	0.5506 / 0.5511	+.0000
16	0.6302 / 0.6298	0.6306 / 0.6312	↓	0.6300 / 0.6306	↓	0.6293 / 0.6298	↓
18	0.7089 / 0.7086	0.7093 / 0.7100		0.7087 / 0.7093		0.7080 / 0.7085	
MM	**j6**	**F7**	**+.011**	**H7**	**-.009**	**M6**	**-.026**
	+.009 / -.004	**+.020 / +.041**	**+.045**	**+.000 / +.021**	**+.025**	**-.017 / -.004**	**-.000**
19	0.7483 / 0.7479	0.7488 / 0.7496	+.0004	0.7481 / 0.7488	-.0004	0.7473 / 0.7479	-.0010
20	0.7877 / 0.7873	0.7882 / 0.7890	+.0018	0.7874 / 0.7882	+.0010	0.7867 / 0.7873	+.0000
22	0.8665 / 0.8660	0.8670 / 0.8677	↓	0.8662 / 0.8669	↓	0.8654 / 0.8660	↓
24	0.9452 / 0.9448	0.9457 / 0.9465		0.9449 / 0.9457		0.9442 / 0.9448	
25	0.9846 / 0.9841	0.9851 / 0.9858		0.9843 / 0.9850		0.9835 / 0.9841	
28	1.1027 / 1.1022	1.1032 / 1.1039		1.1024 / 1.1032		1.1017 / 1.1022	
30	1.1814 / 1.1810	1.1819 / 1.1827		1.1811 / 1.1819		1.1804 / 1.1810	
>30	**k6**	**F7**	**+.007**	**H7**	**-.018**	**K6**	**-.031**
MM	**+.018 / +.002**	**+.025 / +.050**	**+.048**	**+.000 / +.025**	**+.023**	**- .013 / +.003**	**+.001**
32	1.2605 / 1.2600	1.2609 / 1.2618	+.0003	1.2599 / 1.2608	-.0007	1.2593 / 1.2600	-.0012
35	1.3786 / 1.3781	1.3790 / 1.3799	+.0019	1.3780 / 1.3789	+.0009	1.3774 / 1.3781	+.0000
38	1.4967 / 1.4962	1.4971 / 1.4980	↓	1.4961 / 1.4970	↓	1.4955 / 1.4962	↓
40	1.5755 / 1.5750	1.5758 / 1.5767		1.5748 / 1.5758		1.5743 / 1.5750	
42	1.6542 / 1.6537	1.6546 / 1.6555		1.6536 / 1.6545		1.6530 / 1.6537	
45	1.7723 / 1.7718	1.7727 / 1.7736		1.7717 / 1.7726		1.7711 / 1.7718	
48	1.8904 / 1.8899	1.8908 / 1.8917		1.8898 / 1.8907		1.8892 / 1.8899	
50	1.9692 / 1.9686	1.9695 / 1.9704		1.9685 / 1.9695		1.9680 / 1.9687	
>50	**m6**	**F7**	**+.000**	**H7**	**-.030**	**K6**	**-.051**
MM	**+.030 / +.011**	**+.030 / +.060**	**+.049**	**+.000 / +.030**	**+.019**	**- .021 / +.009**	**+.002**
55	2.1665 / 2.1658	2.1666 / 2.1677	+.0000	2.1654 / 2.1665	-.0012	2.1645 / 2.1657	-.0020
56	2.2059 / 2.2052	2.2059 / 2.2071	+.0019	2.2047 / 2.2059	+.0007	2.2039 / 2.2051	-.0001
60	2.3634 / 2.3627	2.3634 / 2.3645	↓	2.3622 / 2.3634	↓	2.3614 / 2.3626	↓
63	2.4815 / 2.4808	2.4815 / 2.4827		2.4803 / 2.4815		2.4795 / 2.4807	
65	2.5602 / 2.5595	2.5603 / 2.5614		2.5591 / 2.5602		2.5582 / 2.5594	
70	2.7571 / 2.7564	2.7571 / 2.7582		2.7559 / 2.7571		2.7551 / 2.7563	
71	2.7964 / 2.7957	2.7965 / 2.7976		2.7953 / 2.7964		2.7944 / 2.7957	
75	2.9539 / 2.9532	2.9540 / 2.9551		2.9528 / 2.9539		2.9519 / 2.9531	
80	3.1508 / 3.1501	3.1508 / 3.1519		3.1496 / 3.1508		3.1488 / 3.1500	
>80	**m6**	**F7**	**+.001**	**H7**	**-.035**	**M7**	**-.070**
MM	+035 / +.013	+.036 / +.071	+.058	+.000 / +.035	+.022	-.035 / +.000	-.013
85	3.3478 / 3.3470	3.3479 / 3.3492	+.0000	3.3465 / 3.3478	-.0014	3.3451 / 3.3465	-.0028
90	3.5447 / 3.5438	3.5447 / 3.5461	+.0023	3.5433 / 3.5447	+.0009	3.5419 / 3.5433	-.0005
95	3.7415 / 3.7407	3.7416 / 3.7429	↓	3.7402 / 3.7415	↓	3.7388 / 3.7402	↓
100	3.9384 / 3.9375	3.9384 / 3.9398		3.9370 / 3.9384		3.9356 / 3.9370	
>100	**m6**	**F7**		**H7**		**P7**	**-.094**
MM	**+.035 / +.013**	**+.036 / +.071**		**+.000 / +.035**		**-.059 / -.024**	**-.037**
110	4.3321 / 4.3312	4.3321 / 4.3335	↓	4.3307 / 4.3321	↓	4.3284 / 4.3298	-.0037
120	4.7258 / 4.7249	4.7258 / 4.7272		4.7244 / 4.7258		4.7221 / 4.7235	-.0015
>120	**m6**	**F7**	**+.003**	**H7**	**-.040**	**P7**	**-.108**
MM	**+.040 / +.015**	**+.043 / +.083**	**+.068**	**+.000 / +.040**	**+.025**	**-.068 / -.028**	**-.043**
125	4.9228 / 4.9219	4.9230 / 4.9245	+.0001	4.9213 / 4.9228	-.0016	4.9186 / 4.9202	-.0043
130	5.1197 / 5.1187	5.1198 / 5.1214	+.0027	5.1181 / 5.1197	+.0010	5.1154 / 5.1170	-.0017
140	5.5134 / 5.5124	5.5135 / 5.5151	↓	5.5118 / 5.5134	↓	5.5091 / 5.5107	↓
150	5.9071 / 5.9061	5.9072 / 5.9088		5.9055 / 5.9071		5.9028 / 5.9044	
160	6.3008 / 6.2998	6.3009 / 6.3025		6.2992 / 6.3008		6.2965 / 6.2981	
170	6.6945 / 6.6935	6.6946 / 6.6962		6.6929 / 6.6945		6.6902 / 6.6918	
180	7.0882 / 7.0872	7.0883 / 7.0899		7.0866 / 7.0882		7.0839 / 7.0855	
>180	**m6**	**F7**	**+.004**	**H7**	**-.046**	**P7**	**-.125**
MM	**+.046 / +.017**	**+.050 / +.096**	**+.079**	**+.000 / +.046**	**+.029**	**-.079 / -.033**	**-.050**
190	7.4821 / 7.4810	7.4823 / 7.4841	+.0002	7.4803 / 7.4821	-.0018	7.4772 / 7.4790	-.0049
200	7.8758 / 7.8747	7.8760 / 7.8778	+.0031	7.8740 / 7.8758	+.0011	7.8709 / 7.8727	-.0020

Dimensions in **BOLD** are in millimeters, rest is in inches.
* Positive values are clearance, negative values are interference. For reference only.

Continued on Continued on Page C-48.

Table 17 – Recommended Bores for Metric Shafts per ISO/R775–1969 (ANSI/AGMA 9112)

	Shaft Diameter	Clearance Fit		Transitional Fit		Interference Fit	
		Hub Bore	Fit*	Hub Bore	Fit*	Hub Bore	Fit*
>200	**m6**	**F7**		**H7**		**R7**	**-.155**
MM	**+.046 / +.017**	**+.050 / +.096**		**+.000 / +.046**		**-.109 / -.063**	**-.080**
210	8.2695 / 8.2684	8.2697 / 8.2715		8.2677 / 8.2695		8.2634 / 8.2652	-.0061
220	8.6632 / 8.6621	8.6634 / 8.6652		8.6614 / 8.6632		8.6571 / 8.6589	-.0031
225	8.8601 / 8.8589	8.8602 / 8.8620		8.8583 / 8.8601		8.8540 / 8.8558	
>225	**m6**	**F7**		**H7**		**R7**	**-.159**
MM	**+.046 / +.017**	**+.050 / +.096**		**+.000 / +.046**		**-.113 / -.067**	**-.084**
230	9.0569 / 9.0558	9.0571 / 9.0589		9.0551 / 9.0569		9.0507 / 9.0525	-.0063
240	9.4506 / 9.4495	9.4508 / 9.4526		9.4488 / 9.4506		9.4444 / 9.4462	-.0033
250	9.8443 / 9.8432	9.8445 / 9.8463		9.8425 / 9.8443		9.8381 / 9.8399	
>250	m6	F7	+.004	H7	-.052	R7	-.178
MM	+.052 / +.020	+.056 / +.108	+.088	+.000 / +.052	+.032	-.126 / -.074	-.094
260	10.2383 / 10.2370	10.2384 / 10.2405	+.0002	10.2362 / 10.2383	-.0020	10.2313 / 10.2333	-.0070
270	10.6320 / 10.6307	10.6321 / 10.6342	+.0035	10.6299 / 10.6320	+.0013	10.6250 / 10.6270	-.0037
280	11.0257 / 11.0244	11.0258 / 11.0279		11.0236 / 11.0257		11.0187 / 11.0207	
>280	m6	F7		H7		R7	-.182
MM	+.052 / +.020	+.056 / +.108		+.000 / +.052		-.130 / -.078	-.098
290	11.4194 / 11.4181	11.4195 / 11.4216		11.4173 / 11.4194		11.4122 / 11.4143	-.0072
300	11.8131 / 11.8118	11.8132 / 11.8153		11.8110 / 11.8131		11.8059 / 11.8080	-.0039
310	12.2068 / 12.2055	12.2069 / 12.2090		12.2047 / 12.2068		12.1996 / 12.2017	
315	12.4036 / 12.4024	12.4038 / 12.4058		12.4016 / 12.4036		12.3965 / 12.3985	
>315	m6	F7	+.005	H7	-.057	R7	-.201
MM	.+057 / +.021	+.062 / +.119	+.098	+.000 / +.057	+.036	-.144 / -.087	-.108
320	12.6007 / 12.5993	12.6009 / 12.6031	+.0008	12.5984 / 12.6007	-.0022	12.5928 / 12.5950	-.0079
330	12.9944 / 12.9930	12.9946 / 12.9968		12.9921 / 12.9944	+.0014	12.9865 / 12.9887	-.0043
340	13.3881 / 13.3867	13.3883 / 13.3905		13.3858 / 13.3881		13.3802 / 13.3824	
350	13.7818 / 13.7804	13.7820 / 13.7842		13.7795 / 13.7818		13.7739 / 13.7761	
355	13.9786 / 13.9772	13.9788 / 13.9811		13.9764 / 13.9786		13.9707 / 13.9730	
>355	m6	F7		H7		R8	-.260
MM	+.057 / +.021	+.062 / +.119		+.000 / +.057		-.203 / -.114	-.135
360	14.1755 / 14.1741	14.1757 / 14.1779		14.1732 / 14.1755		14.1652 / 14.1687	-.0102
370	14.5692 / 14.5678	14.5694 / 14.5716		14.5669 / 14.5692		14.5589 / 14.5624	-.0053
380	14.9629 / 14.9615	14.9631 / 14.9653		14.9606 / 14.9629		14.9526 / 14.9561	
390	15.3566 / 15.3552	15.3568 / 15.3590		15.3543 / 15.3566		15.3463 / 15.3498	
400	15.7503 / 15.7489	15.7505 / 15.7527		15.7480 / 15.7503		15.7400 / 15.7435	
>400	m6	F7	+.005	H7	-.063	R8	-.286
MM	+.063 / +.023	+.068 / +.131	+.108	+.000 / +.063	+.040	-.223 / -.126	-.149
410	16.1442 / 16.1426	16.1444 / 16.1469	+.0002	16.1417 / 16.1442	-.0025	16.1330 / 16.1368	-.0113
420	16.5379 / 16.5363	16.5381 / 16.5406	+.0043	16.5354 / 16.5379	+.0016	16.5267 / 16.5305	-.0059
430	16.9316 / 16.9300	16.9318 / 16.9343		16.9291 / 16.9316		16.9204 / 16.9242	
440	17.3253 / 17.3237	17.3255 / 17.3280		17.3228 / 17.3253		17.3141 / 17.3179	
450	17.7190 / 17.7174	17.7192 / 17.7217		17.7165 / 17.7190		17.7078 / 17.7116	
>450	m6	F7		H7		R8	-.292
MM	+.063 / +.023	+.068 / +.131		+.000 / +.063		-.229 / -.132	-.155
460	18.1127 / 18.1111	18.1129 / 18.1154		18.1102 / 18.1127		18.1012 / 18.1050	-.0115
470	18.5064 / 18.5048	18.5066 / 18.5091		18.5039 / 18.5064		18.4949 / 18.4987	-.0061
480	18.9001 / 18.8985	18.9003 / 18.9028		18.8976 / 18.9001		18.8886 / 18.8924	
490	19.2938 / 19.2922	19.2940 / 19.2965		19.2913 / 19.2938		19.2823 / 19.2861	
500	19.6875 / 19.6859	19.6877 / 19.6902		19.6850 / 19.6875		19.6760 / 19.6798	

Dimensions in **BOLD** are in millimeters, rest is in inches.

* Positive values are clearance, negative values are interference. For reference only.

Go-Flex® Couplings

Martin Go-Flex® Couplings are one of the easiest to install, maintain, and replace!

A complete coupling consists of 2 hubs, available in carbon or stainless steel, a urethane split insert (choose from 5 types), and a cover – either a slide over cover retained by a snap ring, a vertically split for high-speed applications, or a horizontally split cover for extreme torque applications.

Once you have correctly selected and properly installed a Martin Go-Flex® coupling, the split insert is all you should have to replace. Replacement of the insert is easy and your equipment can be back up and running in minutes! Once the hubs are installed, they never need to be moved again.

Remove only the cover, replace the insert, re-install the cover, and you are ready to go!

Advantages

- Fast and easy insert replacement
- Low maintenance
- Minimal downtime
- No lubrication
- Urethane inserts available from Standard to Heavy Duty, High Temperature, and Metal Detectable
- Can be installed vertically or horizontally
- The teeth on the hubs do not touch or overlap thus if the insert fails, you do not have metal to metal contact that could potentially destroy the hubs
- Reversing applications
- No realignment required after insert replacement

Go-Flex® Nomenclature

Hubs (2 required)

Go-Flex® **GF 20 CS 010 H**

Coupling Size
10, 20, 30, 40, 50, 60 70
80, 90, 100, 110 & 120

Material
- **CS** Carbon Steel
- **SS** Stainless Steel

Bore Size*

PB	Plain Bore	**114**	1-7/8"
008	1/2"	**115**	1-15/16"
010	5/8"	**200**	2"
012	3/4"	**202**	2-1/8"
014	7/8"	**203**	2-3/16"
100	1"	**204**	2-1/4"
102	1-1/8"	**206**	2-3/8"
103	1-3/16"	**207**	2-7/16"
104	1-1/4"	**208**	2-1/2"
106	1-3/8"	**210**	2-5/8"
107	1-7/16"	**212**	2-3/4"
108	1-1/2"	**214**	2-7/8"
110	1-5/8"	**215**	2-15/16"
112	1-3/4"	**300**	3"

*Metric, Shrink Fit, Spline Bores available on request

Description
- **H** Hub

Inserts

Go-Flex® **GF 20 SD - INS**

Coupling Size
10, 20, 30, 40, 50, 60 70
80, 90, 100, 110 & 120

Insert Type
- **SD** Standard Duty (Red)
- **MD** Medium Duty (Dark Blue)
- **XD** Extreme Duty (Black)
- **HT** Hi-Temp (White)
- **FG** Food Grade Metal Detectable (Light Blue)

Description
- **INS** Insert

Covers

Go-Flex® **GF 20 SD - CVR**

Coupling Size
10, 20, 30, 40, 50, 60 70
80, 90, 100, 110 & 120

Cover Type
- **SD** Standard Duty (Carbon Steel)
- **SS** Standard Duty (Stainless Steel)
- **XP** Horizontal Split (Aluminum)
- **VS** Vertical Split
- **HS** Horizontal/Vertical Split

Description
- **CVR** Cover

Go-Flex®
Inserts

Martin Go-Flex®
Insert Dimensions (in)

Coupling Series	R	D	W	Wt. (lb)
GF10	1.23	2.23	0.63	0.05
GF20	1.66	2.86	0.85	0.1
GF30	2.16	3.80	1.23	0.3
GF40	2.41	5.05	1.64	0.8
GF50	3.05	6.44	2.02	1.45
GF60	3.90	7.37	2.35	2.0
GF70	4.13	8.20	2.32	3.0
GF80	4.34	9.98	2.63	5.0
GF90	6.19	11.30	2.96	6.0
GF100	7.60	13.61	3.24	9.0
GF110	9.15	15.93	3.67	13.0
GF120	11.25	19.04	5.43	31.0

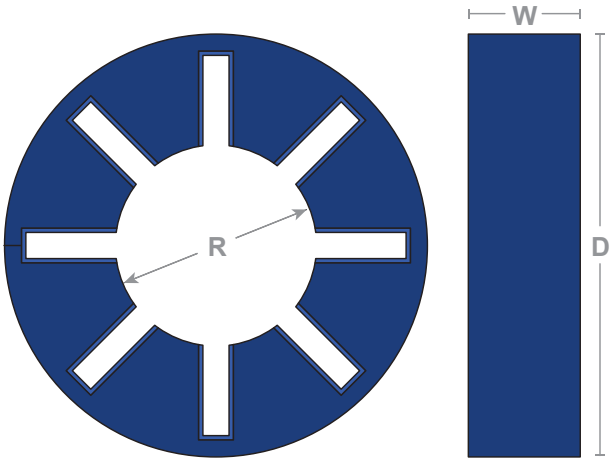

Standard	Medium Torque	Extreme High Torque	Hi-Temp	Metal Detectable
Operational temperature range of -60°F to 212°F (-50°C to 100°C)	**Operational temperature range of -60°F to 212°F** (-50°C to 100°C)	**Operational temperature range of -60°F to 212°F** (-50°C to 100°C)	**Operational temperature range up to 300°F** (148°C)	**Operational temperature range of -60°F to 212°F** (-50°C to 100°C)
Moderately soft urethane compound	**Higher durometer urethane** resulting in a more rigid insert designed for higher torque applications than the regular insert	**Insert provides our highest torque ratings**	**Urethane compound made for Hi-temp applications**	**Metal Detectable Inserts are made with a FDA compliant additive that provides metal detectability**
Applications Vibration dampening, cushioning of shock loads, reversing, or quick starting and stopping of high inertial loads	**Applications** Moderate to high torque	**Applications** High torque	**Applications** Moderate to high torque	**Applications** Food and chemical Industries where plastic contamination compromises production

Go-Flex® Covers

Martin Go-Flex® – Standard Cover

Designed for applications where low torque and/or high speed is present.

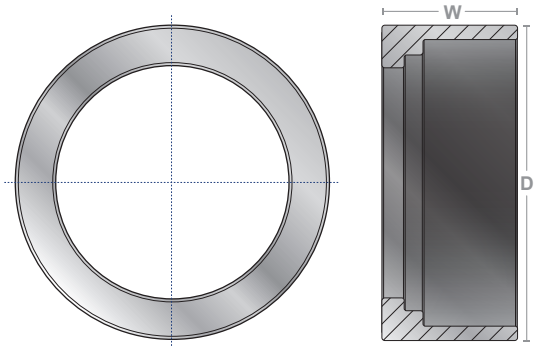

Part Number		Max. RPM◊	D	W	Bolt Size
Carbon Steel	Stainless Steel				
GF10SD-CVR	GF10SD-CVR	12,000	0.95	2.49	Retaining Ring
GF20SD-CVR	GF20SD-CVR	9,000	1.35	3.16	Retaining Ring
GF30SD-CVR	GF30SD-CVR	7,000	1.95	4.21	Retaining Ring
GF40SD-CVR	GF40SD-CVR	6,000	2.38	5.48	Retaining Ring
GF50SD-CVR	GF50SD-CVR	4,800	2.96	7.00	Retaining Ring
GF60SD-CVR	GF60SD-CVR	4,200	3.27	8.00	Retaining Ring
GF70SD-CVR	GF70SD-CVR	3,800	3.50	8.88	(8) M10-1.5 x 35MM
GF80SD-CVR	GF80SD-CVR	3,400	4.05	10.77	(8) M10-1.5 x 35MM
GF90SD-CVR	GF90SD-CVR	3,000	4.88	12.13	(8) M10-1.5 x 35MM
GF100SD-CVR	GF100SD-CVR	2,400	5.00	14.38	(8) M12-1.75 x 45MM
GF110SD-CVR	GF110SD-CVR	2,000	5.50	16.75	(8) M20-2.5 x 45MM
GF120SD-CVR	GF120SD-CVR	1,800	7.94	20.10	(8) M20-2.5 x 45MM

G10 to GF 60 Cover are held into position with a retaining ring. GF70 covers are held into position with (8) bolts.

Martin Go-Flex® – Horizontal Split Cover

Designed for all applications including high and/or low torque and high or low speeds while reducing axial loading.

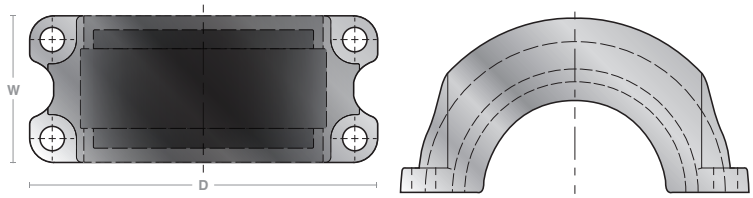

Part Number	Max. RPM◊*	W	D	Bolt Size
GF20XP-CVR	9,000	1.93	3.99	(4) M6-1.00 x 25MM
GF30XP-CVR	7,000	2.61	5.34	(4) M10-1.5 x 35MM
GF40XP-CVR	6,000	3.02	7.28	(4) M12-1.75 x 45MM
GF50XP-CVR	4,800	5.96	7.76	(4) M12-1.75 x 60MM
GF60XP-CVR	4,200	6.17	8.52	(4) M16-2.0 x 65MM
GF70XP-CVR	3,800	6.54	10.29	(4) M20-2.5 x 60MM
GF80XP-CVR	3,400	7.93	12.05	(4) M20-2.5 x 60MM

* With Extreme-Duty Insert.
Stainless Steel hardware provided with all High Performance Covers.

Martin Go-Flex® – Vertical Split and Horizontal/Vertical Split Covers

Designed for high-Speed applications.

Part Number		Max. RPM◊	W	D	Flange Bolt Size	Hub Bolt Size
Vertical Split	Horizontal/ Vertical Split					
GF20VS-CVR	GF20HS-CVR	9,000	4.7	1.78	(8) M6-1.00 x 20MM	Retaining Ring
GF30VS-CVR	GF30HS-CVR	7,000	5.62	2.5	(8) M6-1.00 x 20MM	Retaining Ring
GF40VS-CVR	GF40HS-CVR	6,000	7.62	3.46	(8) M10-1.5 x 20MM	Retaining Ring
GF50VS-CVR	GF50HS-CVR	4,800	8.95	4.35	(8) M10-1.5 x 35MM	Retaining Ring
GF60VS-CVR	GF60HS-CVR	4,200	9.85	4.5	(8) M10-1.5 x 35MM	Retaining Ring
GF70VS-CVR	GF70HS-CVR	3,800	10.5	4.68	(8) M10-1.5 x 35MM	(8) M10-1.5 x 35MM
GF80VS-CVR	GF80HS-CVR	3,400	13.5	5.88	(12) M12-1.75 x 45MM	(8) M10-1.5 x 35MM
GF90VS-CVR	GF90HS-CVR	3,000	15.25	6.21	(16) M12-1.75 x 45MM	(8) M10-1.5 x 35MM
GF100VS-CVR	GF100HS-CVR	2,800	17.75	7.32	(16) M12-1.75 x 50MM	(8) M12-1.75 x 45MM
GF110VS-CVR	GF110HS-CVR	2,000	19.59	7.42	(20) M12-1.75 x 45MM	(8) M20-2.5 x 45MM
GF120VS-CVR	GF120HS-CVR	1,200	24.38	10.85	(20) M12-1.75 x 45MM	(8) M20-2.5 x 45MM

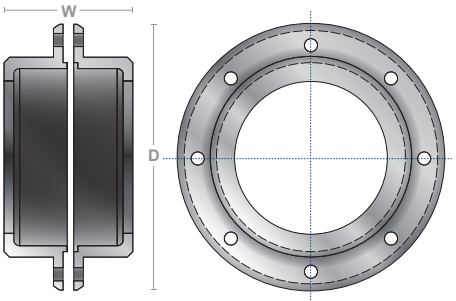

Vertical Split Cover

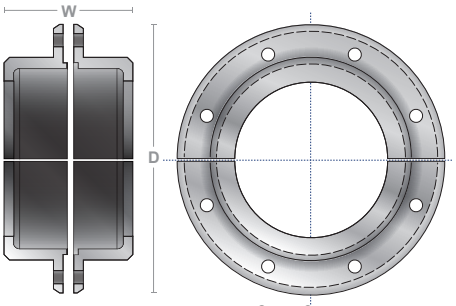

Horizontal/Vertical Split Cover

◊ For applications above listed RPM, consult Martin.

Go-Flex®
Quick Selection Guide

Insert Features

Standard-Duty (Red)	Medium-Duty (Dark Blue)	Extreme-Duty (Black)	High Temp (White)	Metal Detectable (Light Blue)
Max Temp: 212°F	Max Temp: 212°F	Max Temp: 212°F	Max Temp: 300°F	Max Temp: 212°F
Greatest Dampening	Lower Dampening	Lowest Dampening	Lower Dampening	Greatest Dampening
Lowest Torque	Higher Torque	Highest Torque	Higher Torque	Lowest Torque

High-Speed Standard Cover

Max Bore	Coupling Series	Max Torque Rating (in. lb.)				
1-1/4"	GF10	377	792	792	792	365

Horizontal Split, Vertical Split & Horizontal/Vertical Split Covers

Max Bore	Coupling Series	Max Torque Rating (in. lb.)				
1-5/8"	GF20	1,254	2,457	3,789	2,457	1,254
2-1/4"	GF30	4,099	7,730	11,914	7,730	4,099
2-3/8"	GF40	8,630	17,099	25,870	17,099	8,630
3"	GF50	17,315	34,336	52,408	34,336	17,315
3-7/8"	GF60	30,353	58,137	87,110	58,137	30,353
4-1/8"	GF70	38,048	75,538	116,432	75,538	38,048
4-1/2"	GF80	75,000	145,000	220,000	145,000	75,000
5-1/2"	GF90	105,000	204,000	310,000	204,000	105,000
7"	GF100	175,000	345,000	550,000	345,000	175,000
8"	GF110	300,000	565,000	870,000	565,000	300,000
11"	GF120	599,700	1,120,000	1,680,000	1,120,000	599,700

Formula Selection Method

Information required before a coupling can be selected:

- HP and RPM or torque of driver
- Shaft sizes of driver and driven equipment
- Corresponding keyways
- Application description to determine service factor
- Environmental conditions

Step 1. Determine the Nominal Torque (T) of your application

$$\text{in/lb} = T = \frac{(63025 \times HP)}{RPM}$$

Step 2. Refer to pages C-63 & 66 to determine Application Service Factor

Step 3. Calculate the Design Torque of your application.

Design Torque = Nominal Torque (T) x Application Service Factor

Example:

Driver: 5HP, 1800RPM electric motor

Driven: belt conveyor (refer to pages C-63 & 66)

$$\text{in/lbs} = T = \frac{(63025 \times 5HP)}{1800}$$

Nominal Torque (T) = 175 in/lbs

Design Torque = 175 (Nominal Torque) x 1.75 (Application Service Factor from pages C-63 & 66)

Design Torque = 306.25 in/lbs Torque

Step 4. Refer to page C-57 to select correct coupling size - ie. GF10

Step 5. Confirm that the shaft size of the driver and driven shafts are equal to or less than the maximum bore size (refer to coupling dimensional pages)

Step 6. Confirm environmental conditions to determine correct cover, hubs, and insert material (stainless steel or carbon steel hubs and cover, food grade, high temp or standard insert)

For reversing applications with high inertia loads, please consult Martin.

Go-Flex® with Standard Cover Dimensions/Ratings

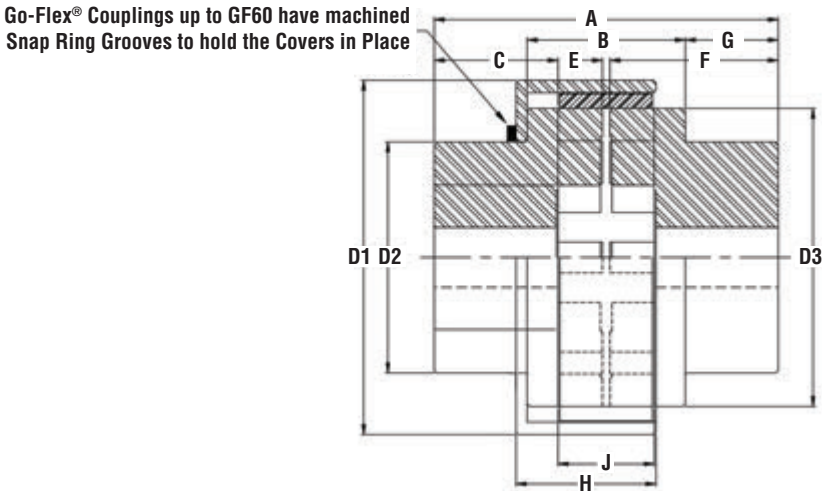

Martin Go-Flex® Coupling with Standard Cover Dimensions/Ratings (Carbon Steel and Stainless Steel)

Coupling Series	Pilot Bore Diameter	Maximum Bore Size ○ Square Key	Max RPM*	Maximum Torque (in-lbs)■	A	B	D1	D2	D3	C	E MIN	E MAX	F	G	H	J	Wt. ◊ (lb)
GF10	1/2"	1-1/4"	12,000	792	2.8	1.03	2.49	2	2.07	1.08	0.062	0.092	1.37	0.88	0.95	0.66	4
GF20	1/2"	1-5/8"	9,000	2,457	3.54	1.28	3.16	2.31	2.55	1.34	0.089	0.104	1.75	1.14	1.35	0.88	5
GF30	3/4"	2-1/4"	7,000	7,730	4.86	2	4.21	3.19	3.37	1.81	0.1	0.13	2.39	1.42	1.95	1.25	11
GF40	7/8"	2-3/8"	6,000	17,099	5.96	2.42	5.48	3.52	4.49	2.16	0.105	0.181	2.96	1.78	2.38	1.66	15
GF50	1"	3"	4,800	34,336	7.07	3.48	7	4.25	5.92	2.46	0.18	0.211	3.4	1.76	2.96	2.19	37
GF60	1"	3-7/8"	4,200	58,137	7.69	3.67	8	5.5	6.75	2.67	0.253	0.293	3.75	2	3.27	2.45	57
GF70	1-1/2"	4-1/8"	3,800	75,538	8.51	3.96	8.88	5.79	7.48	3.1	0.17	0.209	4.21	2.33	3.5	2.49	71
GF80	1-7/8"	4-1/2"	3,400	145,000	10.13	4.67	10.77	7	9.25	3.75	0.196	0.25	5	2.75	4.05	2.75	126
GF90	1-7/8"	5-1/2"	3,000	204,000	12.29	5.09	12.13	7.81	10.5	4.6	0.237	0.349	6	3.6	4.88	3.04	216
GF100	2-1/8"	7"	2,400	345,000	14.28	5.92	14.38	9.5	12.8	5.74	0.25	0.347	7.26	4.45	5	3.35	400
GF110	2-1/8"	8"	2,000	565,000	16.2	6.2	16.75	11	15.09	6.18	0.167	0.309	7.98	5	5.5	3.99	532
GF120	2-1/8"	11"	1,800	1,120,000	20.08	9.18	20.1	15	17.75	7.22	0.236	0.424	9.88	5.45	7.94	5.68	1116

* For applications above listed RPM, consult Martin.
◊ All weights shown are approximate for a complete standard coupling assembly.
■ Maximum torque values (in-lbs) are based on use with black insert. Refer to page C-55 for complete torque ratings.
○ Maximum bore size has reduced keyway on sizes GF20, GF30, and GF40.
Reduced keyways in max bore hubs measure as follows: GF20SD1-5/8" - 3/8" x 3/32" keyway; GF30SD2-1/8" - 1/2" x 1/8" keyway; GF40SD2-3/8" - 5/8" x 5/32" keyway.

Note:
It is not recommended to use the Black insert with the Standard Cover. In high torque applications we recommend the use of the Horizontal Split Cover.

Martin Go-Flex® Insert Maximum Torque Ratings (in-lb)

Coupling Series	Standard-Duty Red	Medium-Duty Dark Blue	Extreme-Duty Black	High Temp White	Metal Detectable Light Blue
GF10	377	792	-	792	377
GF20	1,254	2,457	-	2,457	1,254
GF30	4,099	7,730	-	7,730	4,099
GF40	8,630	17,099	-	17,099	8,630
GF50	17,315	34,336	-	34,336	17,315
GF60	30,353	58,137	-	58,137	30,353
GF70	38,048	75,538	-	75,538	38,048
GF80	75,000	145,000	-	145,000	75,000
GF90	105,000	204,000	-	204,000	105,000
GF100	175,000	345,000	-	345,000	175,000
GF110	300,000	565,000	-	565,000	300,000
GF120	599,700	1,120,000	-	1,120,000	599,700

Go-Flex® with Horizontal Split Cover Dimensions/Ratings

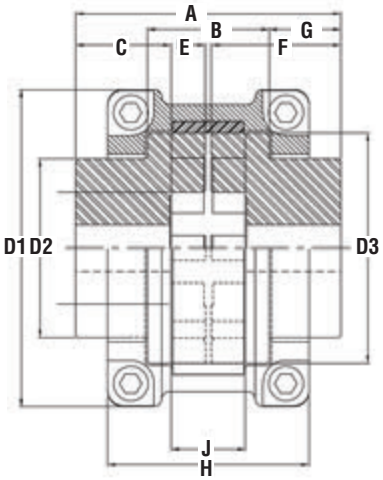

Martin Go-Flex® Coupling with Horizontal Split Cover Dimensions/Ratings (Carbon Steel Only)

Coupling Series	Pilot Bore Diameter	Maximum Bore Size ○ Square Key	Max RPM*	Maximum Torque (in-lbs)■	A	B	D1	D2	D3	C	E MIN	E MAX	F	G	H	J	Wt. ◊ (lb)
GF20	1/2"	1-5/8"	9,000	2,457	3.54	1.28	3.99	2.31	2.55	1.34	0.089	0.104	1.75	1.14	1.93	0.88	5
GF30	3/4"	2-1/4"	7,000	7,730	4.86	2	5.34	3.19	3.37	1.81	0.1	0.13	2.39	1.42	2.61	1.25	12
GF40	7/8"	2-3/8"	6,000	17,099	5.96	2.42	7.28	3.52	4.49	2.16	0.105	0.14	2.96	1.78	3.02	1.66	17
GF50	1"	3"	4,800	34,336	7.07	3.48	7.76	4.25	5.92	2.46	0.221	0.32	3.4	1.76	5.96	2.19	40
GF60	1"	3-7/8"	4,200	58,137	7.69	3.67	8.52	5.5	6.75	2.67	0.253	0.314	3.75	2	6.17	2.45	59
GF70	1-1/2"	4-1/8"	3,800	75,538	8.51	3.96	10.29	5.79	7.48	3.1	0.17	0.209	4.21	2.33	6.54	2.49	81
GF80	1-7/8"	4-1/2"	3,400	145,000	10.13	4.67	12.02	7	9.25	3.75	0.196	0.335	5	2.75	7.92	2.75	138

* For applications above listed RPM, consult Martin.
◊ All weights shown are approximate for a complete standard coupling assembly.
■ Maximum torque values (in-lbs) are based on use with black insert. Refer to page C-55 for complete torque ratings.
○ Maximum bore size has reduced keyway on sizes GF20, GF30, and GF40.
Reduced keyways in max bore hubs measure as follows: GF20XP1-5/8" - 3/8" x 3/32" keyway; GF30XP2-1/8" - 1/2" x 1/8" keyway; GF40XP2-3/8" - 5/8" x 5/32" keyway.

Martin Go-Flex® Insert Maximum Torque Ratings (in-lb)

Coupling Series	Standard-Duty Red	Medium-Duty Dark Blue	Extreme-Duty Black	High Temp White	Metal Detectable Light Blue
GF20	1,254	2,457	3,789	2,457	1,254
GF30	4,099	7,730	11,914	7,730	4,099
GF40	8,630	17,099	25,870	17,099	8,630
GF50	17,315	34,336	52,408	34,336	17,315
GF60	30,353	58,137	87,110	58,137	30,353
GF70	38,048	75,538	116,432	75,538	38,048
GF80	75,000	145,000	220,000	145,000	75,000

Go-Flex® with Vertical Split Dimensions/Ratings

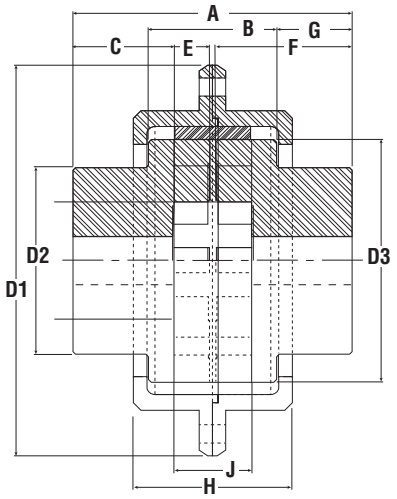

Martin Go-Flex® Coupling with Vertical Split Cover Dimensions/Ratings

Coupling Series	Pilot Bore Diameter	Maximum Bore Size ○ Square Key	Max RPM*	Maximum Torque (in-lbs)■	A	B	D1	D2	D3	C	E MIN	E MAX	F	G	H	J	Wt. ◊ (lb)
GF20	1/2"	1-5/8"	9,000	2,457	3.54	1.28	4.7	2.31	2.55	1.34	0.089	0.104	1.75	1.14	1.78	0.88	7
GF30	3/4"	2-1/4"	7,000	7,730	4.86	2	5.62	3.19	3.37	1.81	0.1	0.13	2.39	1.42	2.5	1.25	13
GF40	7/8"	2-3/8"	6,000	17,099	5.96	2.42	7.62	3.52	4.49	2.16	0.105	0.181	2.96	1.78	3.08	1.66	20
GF50	1"	3"	4,800	34,336	7.07	3.48	8.95	4.25	5.92	2.46	0.221	0.32	3.4	1.76	4.36	2.19	47
GF60	1"	3-7/8"	4,200	58,137	7.69	3.67	9.85	5.5	6.75	2.67	0.253	0.314	3.75	2	4.5	2.45	65
GF70	1-1/2"	4-1/8"	3,800	75,538	8.51	3.96	10.5	5.79	7.48	3.1	0.17	0.209	4.21	2.33	4.67	2.49	80
GF80	1-7/8"	4-1/2"	3,400	145,000	10.13	4.67	13.5	7	9.25	3.75	0.196	0.335	5	2.75	5.88	2.75	136
GF90	1-7/8"	5-1/2"	3,000	204,000	12.29	5.09	15.25	7.81	10.5	4.6	0.237	0.349	6	3.6	6.21	3.04	226
GF100	2-1/8"	7"	2,400	345,000	14.28	5.92	17.75	9.5	12.8	5.74	0.288	0.397	7.26	4.45	7.32	3.35	410
GF110	2-1/8"	8"	2,000	565,000	16.2	6.2	19.56	11	15.09	6.18	0.167	0.309	7.98	5	7.42	3.99	542
GF120	2-1/8"	11"	1,800	1,120,000	20.08	9.18	24.38	15	17.75	7.22	0.236	0.424	9.88	5.45	10.85	5.68	1136

* For applications above listed RPM, consult Martin.
◊ All weights shown are approximate for a complete standard coupling assembly.
■ Maximum torque values (in-lbs) are based on use with black insert. Refer to page C-55 for complete torque ratings.
○ Maximum bore size has reduced keyway on sizes GF20, GF30, and GF40.
Reduced keyways in max bore hubs measure as follows: GF20VS1-5/8" - 3/8" x 3/32" keyway; GF30VS2-1/8" - 1/2" x 1/8" keyway; GF40VS2-3/8" - 5/8" x 5/32" keyway.

Martin Go-Flex® Insert Maximum Torque Ratings (in-lb)

Coupling Series	Standard-Duty Red	Medium-Duty Dark Blue	Extreme-Duty Black	High Temp White	Metal Detectable Light Blue
GF20	1,254	2,457	3,789	2,457	1,254
GF30	4,099	7,730	11,914	7,730	4,099
GF40	8,630	17,099	25,870	17,099	8,630
GF50	17,315	34,336	52,408	34,336	17,315
GF60	30,353	58,137	87,110	58,137	30,353
GF70	38,048	75,538	116,432	75,538	38,048
GF80	75,000	145,000	220,000	145,000	75,000
GF90	105,000	204,000	310,000	204,000	105,000
GF100	175,000	345,000	550,000	345,000	175,000
GF110	300,000	565,000	870,000	565,000	300,000
GF120	599,700	1,120,000	1,680,000	1,120,000	599,700

Go-Flex®
Keyway Sizes and Tolerances

Martin Go-Flex® Standard Bore Sizes

Coupling Size	PB	1/2"	5/8"	3/4"	7/8"	1"	1-1/8"	1-3/16"	1-1/4"	1-3/8"	1-7/16"	1-1/2"	1-5/8"	1-3/4"	1-7/8"	1-15/16"
GF10	X	X	X	X	X	X	X	X	X							
GF20	X		X	X	X	X	X	X	X	X	X	X	X			
GF30	X				X	X	X	X	X	X	X	X	X	X	X	X
GF40	X				X	X	X		X	X	X	X	X	X	X	X
GF50	X											X	X	X	X	X
GF60	X															
GF70	X															
GF80	X															

Martin Go-Flex® Standard Bore Sizes (cont'd)

Coupling Size	2"	2-1/8"	2-3/16"	2-1/4"	2-3/8"	2-7/16"	2-1/2"	2-5/8"	2-3/4"	2-7/8"	2-15/16"	3"
GF10												
GF20												
GF30	X	X										
GF40	X	X	X	X	X							
GF50	X	X		X	X	X	X	X	X	X	X	X
GF60												
GF70												
GF80												

Martin Go-Flex® Bore Tolerances and Keyway Sizes

Shaft Diameter (Nom)	Keyway Size (Nom)		Bore Tolerances				Set Screw Size
	Width	Depth	Clearance Fit**		Interference fit**		
1/2" - 9/16"	1/8"	1/16"	+.0015	-0.0000	-0.0005	-0.0010	5/16"
5/8" - 7/8"	3/16"	3/32"	+.0015	-0.0000	-0.0005	-0.0010	5/16"
15/16" - 1-1/4"	1/4"	1/8"	+.0015	-0.0000	-0.0005	-0.0010	5/16"
1-15/16" - 1-3/8"	5/16"	5/32"	+.0015	-0.0000	-0.0005	-0.0010	5/16"
1-7/16" - 1-3/4"	3/8"	3/16"	+.0015	-0.0000	-0.0005	-0.0015	5/16"
1-13/16" - 2-1/4"	1/2"	1/4"	+.0025	-0.0000	-0.0005	-0.0015	3/8"
2-5/16" - 2-3/4"	5/8"	5/16"	+.0025	-0.0000	-0.0010	-0.0020	1/2"
2-13/16" - 3-1/4"	3/4"	3/8"	+.0025	-0.0000	-0.0010	-0.0020	5/8"
3-5/16" - 3-3/4"	7/8"	7/16"	+.0025	-0.0000	-0.0015	-0.0025	5/8"
3-13/16" - 4-1/2"	1"	1/2"	+.0025	-0.0000	-0.0025	-0.0035	5/8"

** For Class 1 Fit

Reduced keyways in max bore hubs measure as follows: GF20X1-5/8" - 3/8" x 3/32" keyway; GF30X2-1/8" - 1/2" x 1/8" keyway; GF40X2-3/8" - 5/8" x 5/32" keyway.

Torque Ratings

Torque Ratings for Martin Go-Flex® Carbon Steel Couplings with Standard Cover

Coupling Series	Insert Part Number	Insert Color	Continuous Torque (in-lb)	HP Ratings @ Various RPM (Service Factor = 1)							
				100	300	600	900	1200	1800	2400	3600
GF10	GF10SD-INS	Red	365	1	2	3	5	7	10	14	21
	GF10MD-INS	Blue	792	1	4	8	11	15	23	30	45
	GF10HT-INS	White	792	1	4	8	11	15	23	30	45
	GF10FG-INS	Light Blue	365	1	2	3	5	7	10	14	21
GF20	GF20SD-INS	Red	1,254	2	6	12	18	24	36	48	72
	GF20MD-INS	Blue	2,457	4	12	23	35	47	70	94	140
	GF20HT-INS	White	2,457	4	12	23	35	47	70	94	140
	GF20FG-INS	Light Blue	1,254	2	6	12	18	24	36	48	72
GF30	GF30SD-INS	Red	4,099	7	20	39	59	78	117	156	234
	GF30MD-INS	Blue	7,730	12	37	74	110	147	221	294	442
	GF30HT-INS	White	7,730	12	37	74	110	147	221	294	442
	GF30FG-INS	Light Blue	4,099	7	20	39	59	78	117	156	234
GF40	GF40SD-INS	Red	8,630	14	41	82	123	164	246	329	493
	GF40MD-INS	Blue	17,099	27	81	163	244	326	488	651	977
	GF40HT-INS	White	17,099	27	81	163	244	326	488	651	977
	GF40FG-INS	Light Blue	8,630	14	41	82	123	164	246	329	493
GF50	GF50SD-INS	Red	17,315	27	82	165	247	330	495	659	989
	GF50MD-INS	Blue	34,336	54	163	327	490	654	981	1,308	1,961
	GF50HT-INS	White	34,336	54	163	327	490	654	981	1,308	1,961
	GF50FG-INS	Light Blue	17,315	27	82	165	247	330	495	659	989
GF60	GF60SD-INS	Red	30,353	48	144	289	433	578	867	1,156	1,734
	GF60MD-INS	Blue	58,137	92	277	553	830	1,107	1,660	2,214	3,321
	GF60HT-INS	White	58,137	92	277	553	830	1,107	1,660	2,214	3,321
	GF60FG-INS	Light Blue	30,353	48	144	289	433	578	867	1,156	1,734
GF70	GF70SD-INS	Red	38,048	60	181	362	543	724	1,087	1,449	2,173
	GF70MD-INS	Blue	75,538	120	360	719	1,079	1,438	2,157	2,877	4,315
	GF70HT-INS	White	75,538	120	360	719	1,079	1,438	2,157	2,877	4,315
	GF70FG-INS	Light Blue	38,048	60	181	362	543	724	1,087	1,449	2,173
GF80	GF80SD-INS	Red	75,000	119	357	714	1,071	1,428	2,142	2,856	-
	GF80MD-INS	Blue	145,000	230	690	1,380	2,071	2,761	4,141	5,522	-
	GF80HT-INS	White	145,000	230	690	1,380	2,071	2,761	4,141	5,522	-
	GF80FG-INS	Light Blue	75,000	119	357	714	1,071	1,428	2,142	2,856	-
GF90	GF90SD-INS	Red	105,000	167	500	1,000	1,499	1,999	2,999	3,998	-
	GF90MD-INS	Blue	204,000	324	971	1,942	2,913	3,884	5,826	7,768	-
	GF90HT-INS	White	204,000	324	971	1,942	2,913	3,884	5,826	7,768	-
	GF90FG-INS	Light Blue	105,000	167	500	1,000	1,499	1,999	2,999	3,998	-
GF100	GF100SD-INS	Red	175,000	278	833	1,666	2,499	3,332	4,998	6,664	-
	GF100MD-INS	Blue	345,000	547	1,642	3,284	4,927	6,569	9,853	13,138	-
	GF100HT-INS	White	345,000	547	1,642	3,284	4,927	6,569	9,853	13,138	-
	GF100FG-INS	Light Blue	175,000	278	833	1,666	2,499	3,332	4,998	6,664	-
GF110	GF110SD-INS	Red	300,000	476	1,428	2,856	4,284	5,712	8,568	-	-
	GF110MD-INS	Blue	565,000	896	2,689	5,379	8,068	10,758	16,136	-	-
	GF110HT-INS	White	565,000	896	2,689	5,379	8,068	10,758	16,136	-	-
	GF110FG-INS	Light Blue	300,000	476	1,428	2,856	4,284	5,712	8,568	-	-
GF120	GF120SD-INS	Red	599,700	952	2,855	5,709	8,564	11,418	17,127	-	-
	GF120MD-INS	Blue	1,120,000	1,777	5,331	10,662	15,994	21,325	31,987	-	-
	GF120HT-INS	White	1,120,000	1,777	5,331	10,662	15,994	21,325	31,987	-	-
	GF120FG-INS	Light Blue	599,700	952	2,855	5,709	8,564	11,418	17,127	-	-

Martin Go-Flex® flexible couplings can sustain momentary peak torque loads in excess of 200% of its maximum torque rating.

Torque Ratings

Torque Ratings for Martin Go-Flex® Carbon Steel Couplings with Horizontal Split, Vertical Split and Horizontal/ Vertical Split Cover

Coupling Series	Insert Part Number	Insert Color	Continuous Torque (in-lb)	HP Ratings @ Various RPM (Service Factor = 1)							
				100	300	600	900	1200	1800	2400	3600
GF20	GF20SD-INS	Red	1,254	2	6	12	18	24	36	48	72
	GF20MD-INS	Blue	2,457	4	12	23	35	47	70	94	140
	GF20XD-INS	Black	3,789	6	18	36	54	72	108	144	216
	GF20HT-INS	White	2,457	4	12	23	35	47	70	94	140
	GF20FG-INS	Light Blue	1,254	2	6	12	18	24	36	48	72
GF30	GF30SD-INS	Red	4,099	7	20	39	59	78	117	156	234
	GF30MD-INS	Blue	7,730	12	37	74	110	147	221	294	442
	GF30XD-INS	Black	11,914	19	57	113	170	227	340	454	681
	GF30HT-INS	White	7,730	12	37	74	110	147	221	294	442
	GF30FG-INS	Light Blue	4,099	7	20	39	59	78	117	156	234
GF40	GF40SD-INS	Red	8,630	14	41	82	123	164	246	329	493
	GF40MD-INS	Blue	17,099	27	81	163	244	326	488	651	977
	GF40XD-INS	Black	25,870	41	123	246	369	493	739	985	1,478
	GF40HT-INS	White	17,099	27	81	163	244	326	488	651	977
	GF40FG-INS	Light Blue	8,630	14	41	82	123	164	246	329	493
GF50	GF50SD-INS	Red	17,315	27	82	165	247	330	495	659	989
	GF50MD-INS	Blue	34,336	54	163	327	490	654	981	1,308	1,961
	GF50XD-INS	Black	52,408	83	249	499	748	998	1,497	1,996	2,994
	GF50HT-INS	White	34,336	54	163	327	490	654	981	1,308	1,961
	GF50FG-INS	Light Blue	17,315	27	82	165	247	330	495	659	989
GF60	GF60SD-INS	Red	30,353	48	144	289	433	578	867	1,156	1,734
	GF60MD-INS	Blue	58,137	92	277	553	830	1,107	1,660	2,214	3,321
	GF60XD-INS	Black	87,110	138	415	829	1,244	1,659	2,488	3,317	4,976
	GF60HT-INS	White	58,137	92	277	553	830	1,107	1,660	2,214	3,321
	GF60FG-INS	Light Blue	30,353	48	144	289	433	578	867	1,156	1,734
GF70	GF70SD-INS	Red	38,048	60	181	362	543	724	1,087	1,449	2,173
	GF70MD-INS	Blue	75,538	120	360	719	1,079	1,438	2,157	2,877	4,315
	GF70XD-INS	Black	116,432	185	554	1,108	1,663	2,217	3,325	4,434	6,651
	GF70HT-INS	White	75,538	120	360	719	1,079	1,438	2,157	2,877	4,315
	GF70FG-INS	Light Blue	38,048	60	181	362	543	724	1,087	1,449	2,173
GF80	GF80SD-INS	Red	75,000	119	357	714	1,071	1,428	2,142	2,856	-
	GF80MD-INS	Blue	145,000	230	690	1,380	2,071	2,761	4,141	5,522	-
	GF80XD-INS	Black	220,000	349	1,047	2,094	3,142	4,189	6,283	8,378	-
	GF80HT-INS	White	145,000	230	690	1,380	2,071	2,761	4,141	5,522	-
	GF80FG-INS	Light Blue	75,000	119	357	714	1,071	1,428	2,142	2,856	-
GF90	GF90SD-INS	Red	105,000	167	500	1,000	1,499	1,999	2,999	3,998	-
	GF90MD-INS	Blue	204,000	324	971	1,942	2,913	3,884	5,826	7,768	-
	GF90XD-INS	Black	310,000	492	1,476	2,951	4,427	5,902	8,854	11,805	-
	GF90HT-INS	White	204,000	324	971	1,942	2,913	3,884	5,826	7,768	-
	GF90FG-INS	Light Blue	105,000	167	500	1,000	1,499	1,999	2,999	3,998	-
GF100	GF100SD-INS	Red	175,000	278	833	1,666	2,499	3,332	4,998	6,664	-
	GF100MD-INS	Blue	345,000	547	1,642	3,284	4,927	6,569	9,853	13,138	-
	GF100XD-INS	Black	550,000	873	2,618	5,236	7,854	10,472	15,708	20,944	-
	GF100HT-INS	White	345,000	547	1,642	3,284	4,927	6,569	9,853	13,138	-
	GF100FG-INS	Light Blue	175,000	278	833	1,666	2,499	3,332	4,998	6,664	-
GF110	GF110SD-INS	Red	300,000	476	1,428	2,856	4,284	5,712	8,568	-	-
	GF110MD-INS	Blue	565,000	896	2,689	5,379	8,068	10,758	16,136	-	-
	GF110XD-INS	Black	870,000	1,380	4,141	8,282	12,424	16,565	24,847	-	-
	GF110HT-INS	White	565,000	896	2,689	5,379	8,068	10,758	16,136	-	-
	GF110FG-INS	Light Blue	300,000	476	1,428	2,856	4,284	5,712	8,568	-	-
GF120	GF120SD-INS	Red	599,700	952	2,855	5,709	8,564	11,418	-	-	-
	GF120MD-INS	Blue	1,120,000	1,777	5,331	10,662	15,994	21,325	-	-	-
	GF120XD-INS	Black	1,680,000	2,666	7,997	15,994	23,990	31,987	-	-	-
	GF120HT-INS	White	1,120,000	1,777	5,331	10,662	15,994	21,325	-	-	-
	GF120FG-INS	Light Blue	599,700	952	2,855	5,709	8,564	11,418	-	-	-

Martin Go-Flex® flexible couplings can sustain momentary peak torque loads in excess of 200% of its maximum torque rating.

Misalignment Tolerances

Martin Go-Flex® Couplings Misalignment Tolerances

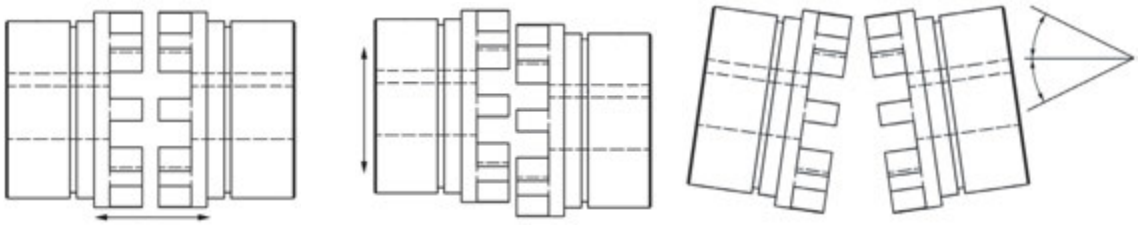

Coupling Series	Axial Misalignment Tolerance (in)	Radial Misalignment Tolerance (in)	Angular Misalignment Tolerance
GF10	0.078	0.020	2°
GF20	0.116	0.039	2°
GF30	0.116	0.039	2°
GF40	0.116	0.039	2°
GF50	0.156	0.058	2°
GF60	0.175	0.058	1.3°
GF70	0.234	0.058	1.3°
GF80	0.234	0.058	1°
GF90	0.234	0.058	1°
GF100	0.312	0.058	1°
GF110	0.312	0.078	1°
GF120	0.312	0.078	1°

Go-Flex® Service Factors

Application	Factor
AERATORS	2.5
AGGREGATE PROCESSING, CEMENT, MINING KILNS	
Direct or on Line Shaft of Reducer	
With Final Drive Machined Spur Gears	2.25
With Single Helical or Herringbone Gears	2.0
Crushers, Ore or Stone	2.75
Dryer, Rotary	2.0
Grizzly	2.25
Hammermill or Hog	2.0
Tumbling Mill or Barrel	2.0
AGITATORS	
Vertical, Horizontal, Screw, Propeller, Paddle	1.25
BARGE HAUL PULLER	1.75
BLOWERS	
Centrifugal	1.5
Lobe or Vane	1.5
BREWING AND DISTILLING	
Bottle and Can Filling Machines	1.5
Brew Kettle	1.25
Cookers, Continuous Duty	1.5
Lauter Tub	1.75
Mash Tub	1.5
Scale Hopper, Frequent Peaks	2.0
CLARIFIER OR CLASSIFIER	1.25
CLAY WORKING INDUSTRY	
Brick Press, Briquette Machine, Clay Working Machine, Pug Mill	2.0
COMPRESSORS	
Centrifugal	1.25
Rotary, Lobe or Vane	1.5
Rotary, Screw	1.5
Reciprocating	
Direct Connected	Refer to Factory
Without Flywheels	
With Flywheel and Gear between Compressor and Prime Monitor	
1 Cylinder, Single Acting	3.0
1 Cylinder, Double Acting	3.0
2 Cylinders, Single Acting	3.0
2 Cylinders Double Acting	3.0
3 Cylinders Single Acting	3.0
3 Cylinders, Double Acting	2.0
4 Or More Cyl Single Acting	2.5
4 Or More Cyl Double Acting	2.5

Application	Factor
CONVEYORS	
Apron, Assembly, Belt, Chain, Flight, Screw	1.75
Bucket	1.75
Live Roll, Shaker and Reciprocating	3.0
Bridge, Travel or Trolley	2.50
DREDGERS	
Cable Reel	2.0
Conveyors	1.50
Cutter Head, Jig Drive	2.5
Maneuvering Winch	1.75
Pumps (Uniform Load)	1.75
Screen Drive, Stacker	2.0
Utility Winch	2.0
DYNAMOMETER	1.5
ELEVATORS - BUCKET, CENTRIFUGAL DISCHARGE	1.75
EXCITER, GENERATOR	1.5
EXTRUDER, PLASTIC	1.5
FANS	
Centrifugal	1.25
Cooing Tower	2.0
Forced Draft-Across the Line Start	1.75
FOOD INDUSTRY	
Beet Slicer	2.0
Bottling, Can, Filling Machine	1.5
Cereal Cooker	1.5
Dough Mixer, Meat Grinder	2.0
Forced Draft Motor driven thru fluid or Electric Slip Clutch	1.25
Gas Recirculating	1.50
Induced Draft with damper control or blade cleaner	1.50
Induced Draft without controls	2.0
FEEDERS	
Apron, Belt, Disc, Screw	1.25
Reciprocating	2.5
GENERATORS	
Even Load	1.25
Hoist or Railway Service	1.75
Welder Load	2.0
HAMMERMILL	1.75
LAUNDRY WASHER OR TUMBLER	2.0
LINE SHAFTS ANY PROCESSING MACHINERY	1.5
LUMBER	
Band Resaw	2.0
Circular Resaw, Cutoff	2.0
Edger, Head Rig, Hog	2.5
Gang Saw (Reciprocating)	3.0

Application	Factor
Log Haul	2.5
Planer	2.0
Rolls, Non-Reversing	1.5
Rolls, Reversing	2.5
Sawdust Conveyor	1.5
Slab Conveyor	2.0
Sorting Table	1.75
Trimmer	2.0
MACHINE TOOLS	
Auxiliary and Traverse Drive	1.0
Bending Roll, Notching Press, Punch, Press, Planer, Plate Reversing	1.75
Main Drive	1.5
METAL ROLLING MILLS	
Coilers (Up or Down) Cold Mill Only	1.75
Coilers (Up or Down) Hot Mill Only	2.25
Coke Plants	
Pusher Ram Drive	2.75
Door Opener	2.25
Pusher or Larry Car Traction Drive	3.25
Continuous Caster	2.0
Cold Mills	
Strip Mills	Refer to Factory
Temper Mills	
Cooling Beds	1.75
Drawbench	2.25
Feed Rolls - Blooming Mills	3.25
Furnace Pushers	2.25
Hot and Cold Saws	2.25
Hot Mills	
Strip or Sheet Mills	Refer to Factory
Reversing Blooming	
Slabbing Mills	
Edger Drives	
Ingot Cars	2.25
Manipulators	3.25
Merchant Mills	Refer to Factory
Mill Tables	
Roughing Breakdown Mills	3.25
Hot Bed or Transfer (non-reversing)	1.75
Runout (reversing)	3.25
Runout (non-reversing, non-plugging)	2.25
Reel Drives	2.0
Rod Mills	Refer to Factory
Screwdown	2.25
Seamless Tube Mills	
Piercer	3.25

* For reversing applications with high inertia loads, please consult Martin.

Go-Flex®
Service Factors (Cont'd)

Application	Factor
Thrust Block	2.25
Tube Conveyor Rolls	2.25
Reeler	2.25
Kick Out	2.25
Shear, Croppers	Refer to Factory
Sideguards	3.25
Skelp Mills	Refer to Factory
Slitters (Steel Mill only)	2.0
Soaking Pit Cover Drives	
Lift	1.25
Travel	2.25
Straighteners	2.25
Unscramblers (Billet Bundle Busters)	2.25
Wire Drawing Machinery	2.0
MIXERS (ALSO SEE AGITATORS)	
Concrete	1.75
Muller	1.5
OIL INDUSTRY	
Chiller	1.50
Oilwell Pumping (not over 150% peak torque)	2.5
Paraffin Filter Press	1.75
Rotary Kiln	2.5
PAPER MILLS	
Barker, Auxiliary, Hydraulic	2.5
Barker, Mechanical	2.5
Barker, Drum L.S. shaft of reducer with final drive-	
Helical or Herringbone Gear	2.5
Machined Spur Gear	3.0
Cast Tooth Spur Gear	3.0
Beater & Pulper	2.0
Bleachers, Coaters	1.5
Calendar & Super Calendar	2.0
Chipper	3.0
Converting Machine	1.5
Couch	2.0
Cutter, Felt Whipper	2.25
Cylinder, Dryer	2.0
Felt Stretcher	1.75
Fourdrinier	2.0
Jordan	2.5
Log Haul	2.5
Line Shaft	1.75
Press	2.0
Pulp Grinder	2.0
Reel, Rewinder, Winder	2.0
Stock Chest, Washer, Thickener	1.75

Application	Factor
Stock Pumps, Centrifugal	
Constant Speed	1.25
Frequent Speed Changes Under Load	1.5
Suction Roll	2.0
PRESS, PRINTING	1.5
PUG MILL	1.75
PULVERIZERS	
Hammermill and Hog	1.75
Roller	1.5
PUMPS CENTRIFUGAL	
Constant Speed	1.0
Frequent Speed Changes Under Load	1.75
Descaling, with Accumulators	1.75
Gear, Rotary, or Vane	1.75
PUMPS RECIPROCATING	
1 Cyl., single or double acting	3.0
2 Cyl., single acting	2.5
2 Cyl., double acting	2.0
3 or more cylinders	2.0
RUBBER INDUSTRY	
Calendar	2.25
Cracker, Plasticolour	2.5
Extruder	2.0
Tire & Tube Press Opener (peak torque)	1.5
Warming Mill	
One or two mills in line	2.0
Three or more mills in line	2.5
Washer	2.75
SCREENS	
Air Washing	1.5
Grizzly	2.5
Rotary Coal or Sand	2.0
Vibrating	2.5
Water	1.5
SEWAGE DISPOSAL EQUIPMENT	
Bar Screen, Chemical Feeders, Collectors,	
Dewatering Screen, Grit Collector	1.5
Mill Stands, Turbine Driven with all Helical or Herringbone Gears	1.75
Electric Drive or Steam Engine Drive with Helical or Herringbone	2.0
STOKER	1.0
SUGAR INDUSTRY	
Cone Carrier and Leveler	2.25
Cane Knife and Crusher	2.5
Mill Stands, Turbine Driver with all helical or Herringbone Gears	1.75

Application	Factor
Electric Drive or Steam Engine Drive with helical, Herringbone, or Spur Gears with any Prime Mover	2.0
TEXTILE INDUSTRY	
Batcher	1.5
Calendar, Card Machine	1.75
Cloth Finishing Machine	1.75
Dry Can, Loom	1.75
Dyeing Machinery	1.5
Knitting Machine	Refer to Factory
Mangle, Napper, Soaper	1.5
Spinner, Tenter Frame, Winder	1.75
TUMBLING BARREL	2.0
WINCH, MANEUVERING - DREDGE, MARINE	1.5
WINDLASS	1.5

Engine Service Factors

Service Factors for engine drives are those required for applications where good flywheel regulation prevents torque fluctuation greater than 20%. For drives where torque fluctuations are greater or where the operation is near a serious critical or torsional vibration, a mass elastic study is necessary.

To determine an engine drive service factor, first determine the application service factor for motors. Then, use that to find the correct engine service factor in the table below. When the application service factor for motors is greater than 2.0 or where 1, 2, or 3 cylinder engines are involved, please contact customer service with complete application details for engineering review.

Application Service Factor	Engine Factor	
	4 to 5 Cylinders	6+ Cylinders
1.0	2.0	1.5
1.25	2.25	1.75
1.5	2.5	2.0
1.75	2.75	2.25
2.0	3.0	2.5

* For reversing applications with high inertia loads, please consult Martin.

Go-Flex®
Compatibility Chart

A = Little to No Effect **B = Minor to Moderate Effect** **C = Severe Effect to Destruction** **N = No Data; Test Prior to Use**

Acetaldehyde	C
Acetamide	N
Acetic Acid	C
Acetic Anhydride	C
Acetone	C
Acetyl Bromide	C
Acetyl Chloride	C
Acetylene	C
Adipic Acid	A
Aero Shell Grease	B
Aero Lubriplate	A
Aero Safe 2300	N
Aerozene 50	N
Aluminum Acetate	N
Aluminum Bromide	N
Aluminum Chloride	B
Aluminum Sulfate	B
Ammonia	B
Ammonium Carbonate	B
Ammonium Chloride	N
Ammonium Hydroxide	B
Ammonium Nitrate	B
Ammonium Persulfate	B
Ammonium Sulfate	B
Ammonium Sulfide	B
Ammonium Thiocynate	B
Amonnium Acetate	C
Amyl Acetate	C
Amyl Alcohol	C
Aniline	C
Aniline Hydrochloride	C
Animal Fats & Oils	B
Antimony Salts	B
Aqua Regia	C
Arsenic Salts	B
ASTM Oil #1	A
ASTM Oil #2	B
ASTM Oil #3	B
ASTM Reference Fuel	A
ASTM Reference Fuel	B
Atlantic Oil	A
Barium Carbonate	B
Barium Hydroxide	A
Beer	A
Benzaldehyde	B
Benzene	C
Benzoic Acid	B
Black Sulphate Liquors	N
Bleach Solutions	N
Boric Acid	A

Brake Fluid	N
Bromine	B
Bunker Oil	A
Butane	A
Butyl Acetate	C
Butyl Alcohol	B
Calcium Carbonate	B
Calcium Chloride	A
Calcium Hydroxide	A
Calcium Nitrate	B
Calcium Sulfate	B
Carbon Dioxide	A
Carbon Disulfide	B
Carbon Monoxide	A
Carbon Tetrachloride	C
Chlorine	N
Chloroacetic Acid	C
Chloroform	C
Chromic Acid	C
Chromium Potassium Sulfate	B
Citric Acid	B
Corn Oil	A
Cottonseed Oil	A
Cresol	C
Crude Oil	B
Cupric Chloride	A
Cupric Nitrate	B
Cupric Sulfate	B
Cutting Oil	B
Cyclohexane	B
Cyclohexanone	C
Dibutyl Phthalate	C
Dichlorobenzene	C
Diesel Fuel	B
Diester Oil	B
Dimethyl Acetamide	C
Dimethyl Formamide	C
Dodecyl Mercaptan	B
DTE Oil	B
Dibutyl Ether	B
EP Lubes	A
Esso #90 Lube Oil	A
Ether	B
Ethyl Acetate	C
Ethyl Alcohol (Ethanol)	C
Formic Acid	C
Freon, 12 or 113	A
Fuel Oil	B
Gasoline	B
Glucose	A

Glue	N
Glycerin	A
Heptane	A
Hexane	A
Hydrazine	C
Hydrobromic Acid	B
Hydrocarbon Oil	A
Hydrochloric Acid	B
Hydrofluoric Acid	B
Hydrogen	A
Hydrogen Peroxide	B
Hydrogen Sulfide	C
Hydrologic Acid	B
Iodine	A
Isobutyl Alcohol	N
Isopropyl Chloride	N
Isopropyl Ether	B
Isopropyl Alcohol (Propanol)	B
JP4 Oil	B
JP5 & 6 Oil	C
Kerosene	B
Lactic Acid	B
Lead Acetate	B
Linseed Oil	B
Liquefied Petroleum Gas	A
Lubrication Oil	B
Lye	N
Magnesium Chloride	N
Magnesium Hydroxide	A
Magnesium Salts	B
Malaic Acid	C
Mercury	B
Methyl Alcohol (methanol)	A
Methyl Ethyl Ketone	C
Methylene Chloride	C
MIL-D-5606 Oil	C
MIL-L-7808 Oil	B
Mineral Oil	A
Mineral Spirits	N
Naphthalene	B
Natural Gas	B
Nickel Salts	C
Oxygen	A
Ozone	A
Paimitic Acid	A
Paint Thinner	B
Peanut Oil	A
Perchloric Acid	C
Perchloroethylene	C
Petroleum	B

Phenol (carbolic acid)	C
Phosphoric Acid	C
Potassium Cyanide	A
Potassium Salts	B
Propane	B
Propyl Alcohol	B
Propylene Glycol	B
Pydraul Oil	C
SAE #10 Oil	A
Seawater	A
Silicic Acid	B
Silver Nitrate	B
Skydrol Oil	C
Soap	B
Sodium Acetate	A
Sodium Bicarbonate	B
Sodium Borate	B
Sodium Carbonate	B
Sodium Chloride	B
Sodium Cyanide	B
Sodium Hydrosulfite	B
Sodium Hydroxide	B
Sodium Hypochlorite	C
Sodium Nitrate	B
Sodium Silicate	A
Sodium Sulfate	B
Sodium Sulfide	B
Steam	C
Styrene	B
Sulfur Dioxide	B
Sulfuric Acid	C
Tannic Acid	A
Tartaric Acid	A
Toluene	C
Transformer Oil	B
Turpentine	C
Urea	B
Varnish	B
Water	B

Go-Flex® Coupling Installation Instructions

Please follow the step by step installation instructions to properly install Martin Go-Flex® Couplings:

Required components:

2 Hubs

1 Insert

1 Cover with hardware: Identify what style cover you are using as this will determine the proper installation procedure.

There are three types of covers (Figure 1):

1. **Standard Cover (SD)**: for coupling sizes GF10 through GF70 a standard snap ring secures cover in place.
2. **Horizontal Split Cover (XP)**: It is a free floating cover that encapsulates the insert and the shoulder of both hubs. Each cover assembly comes with four socket head cap screws to secure the two halves together.
3. **Vertical Split Cover (VS):** GF20 through GF70 use eight bolts around the rim to secure the two halves together, GF80 through GF100 use 16 bolts with lock washers to secure the covers to one of the hubs.
4. **Horizontal/Vertical Split Cover (HS):** GF20 through GF70 use eight bolts around the rim to secure the 4 parts. together, GF80 through GF100 use 16 bolts with lock washers to secure the covers to one of the hubs.

Figure 1. Martin Go-Flex® covers and types

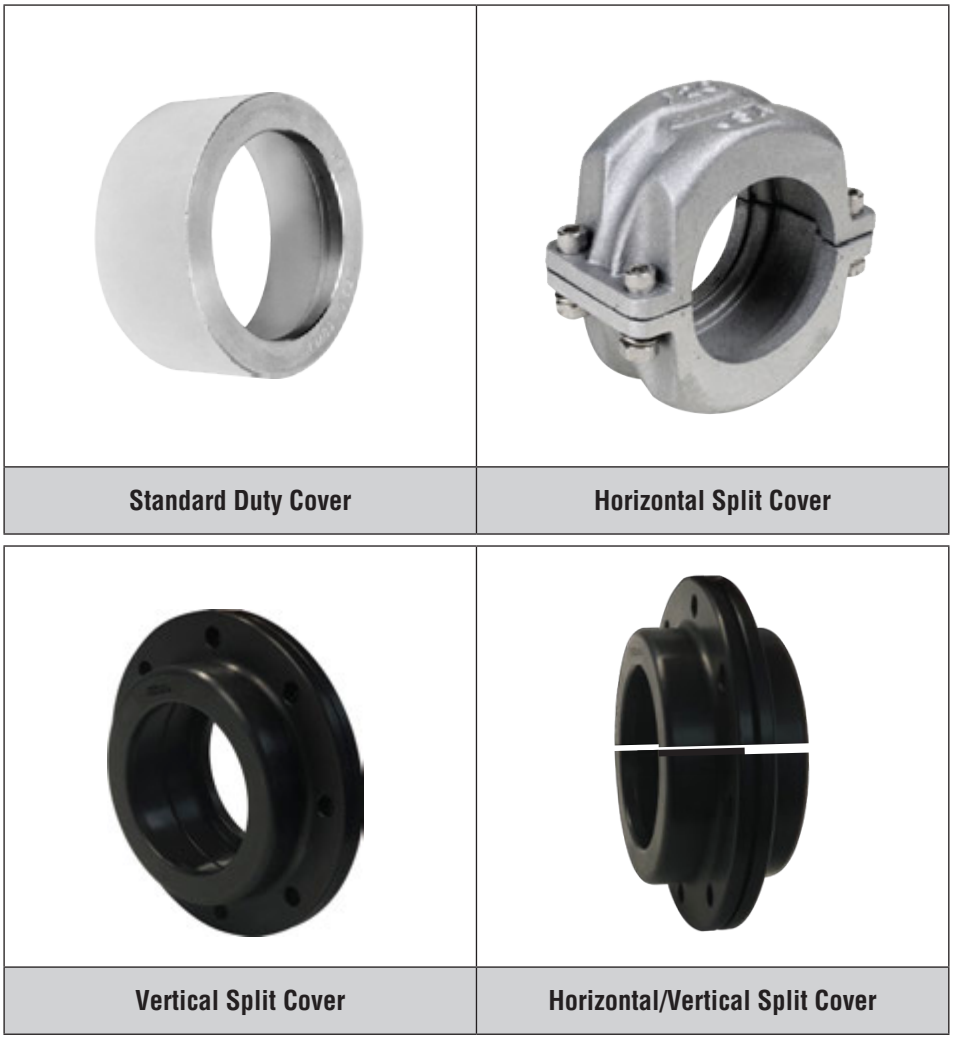

Go-Flex® Coupling Installation Instructions

Installation Instructions:

1. Confirm bore sizes of each coupling half and the corresponding shaft diameter to ensure that you have the proper bore size.
2. Ensure that the shafts are clean and free from burrs.
3. Verify cover style:
   - When using a **Standard Duty Cover (SD)**, it should be located on the driven shaft. If space is limited, then it can be mounted on the drive shaft. Slide snap ring first, then **Standard Duty Cover (SD)** with larger opening facing the shaft separation.
   - When using an **Horizontal Split Cover (XP)**, proceed to step 4.
   - When using a **Vertical Split Cover (VS)**, Install one cover half on each shaft with flange side facing the shaft separation prior to installing the hubs.
   - If using a **Vertical Split Cover (VS), GF70 or larger**, use bolts and washers to secure in place. Slide one bolt into place until installation is complete.
4. Installing the first hub: It should be mounted so that the end of the shaft is flush with surface "A" as shown in Figure 2. It is acceptable for the shaft to extend past "A" as long as it is not past the teeth shown as "B".

   Please note: Standard hubs are supplied with a clearance fit and should slide onto the shaft without excessive force. If the hubs have been ordered with interference fit (shrink fit), then heat the coupling halves to approximately 572°F (300°C) before installing on shafts.
5. With the insert in place, install the second hub. This will help establish set the hubs at the minimum hub gap (E min) dimension to ensure proper clearance. Please see Table 1 on the next page for specific E min and E max dimensions.
6. Now ensure both hubs are securely tightened to the shafts.
7. Check coupling for misalignment and align as necessary. Please refer to page C-63 Martin Big Catalog for misalignment tolerances.
8. Installation of cover:
   - **Standard Duty Cover (SD)**: slide the cover over hub and insert until the step in the cover contacts the shoulder of the hub. Use snap ring pliers to slide snap ring over hub and into snap ring groove in hub to hold the cover in place for GF10 through GF60. GF70 and above use the bolts and washer to secure the cover to the hub. Reference Table 2 for recommended tightening torque..
   - **Horizontal Split Cover (HP)**: place each half over the insert and shoulder on hubs. Secure the two housing halves together by using the included hardware set supplied. Reference Table 2 for recommended tightening torque.
   - **Vertical Split Cover (VS):** slide the two cover halves over the hub and insert until faces meet. Install the radial outer bolts used to secure the two halves together. If cover uses a snap ring, use snap ring pliers to slide snap ring over hub and into snap ring groove in hub to hold the cover in place. For GF70 or larger, use bolts and washers to secure the cover to one hub. Reference Table 2 for recommended tightening torque.
   - **Horizontal/Vertical Split Cover (HS):** place each part around the hub and Install the radial outer bolts used to secure the parts together. If cover uses a snap ring, use snap ring pliers to slide snap ring over hub and into snap ring groove in hub to hold the cover in place. For GF70 or larger, use bolts and washers to secure the cover to one hub. Reference Table 2 for recommended tightening torque.

Maximum RPM and Balance:

The Martin Go-Flex® Coupling inherently has good dynamic balance due to our manufacturing process. In high speed applications, it is important that the key used to attach hubs to shaft is the same length as the hub. The set screws should also be changed to full length to fill the hole. Please refer to Table 1 on the next page for maximum RPM ratings.

Go-Flex® Coupling Installation Instructions

Figure 2. Martin Go-Flex® shaft-to-hub alignment.
See page C-63 for Misalignment Tolerances.

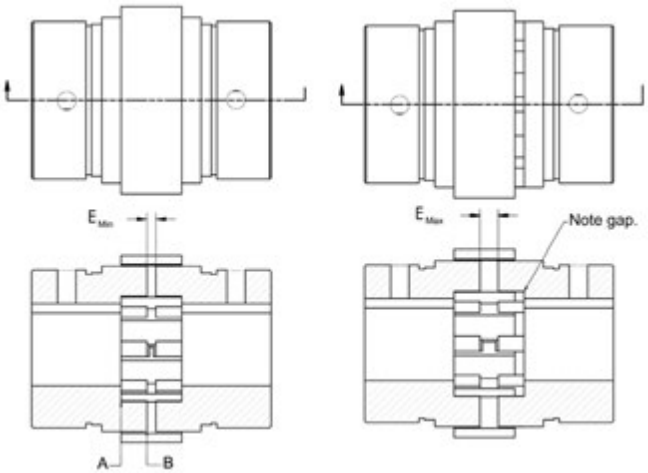

Table 1. EMIN and EMAX Dimensions

Coupling Series	Maximum RPM*	Standard Split Cover		Horizontal Split Cover		Vertical & Horizontal/Vertical Split Covers	
		EMIN	EMAX	EMIN	EMAX	EMIN	EMAX
GF10	4000	0.062	0.092	—	—	—	—
GF20	4000	0.036	0.110	0.036	0.220	0.036	0.126
GF30	4000	0.080	0.205	0.080	0.160	0.080	0.140
GF40	4000	0.035	0.208	0.035	0.160	0.035	0.220
GF50	4000	0.140	0.290	0.140	0.370	0.140	0.380
GF60	4000	0.188	0.208	0.188	0.368	0.188	0.348
GF70	3800	0.100	0.230	0.100	0.318	0.100	0.258
GF80	3400	0.125	0.250	0.204	0.375	0.204	0.375
GF90	3000	0.194	0.388	—	—	0.189	0.410
GF100	2400	0.241	0.278	—	—	0.242	0.454
GF110	2000	0.121	0.305	—	—	0.121	0.380
GF120	1800	0.158	0.505	—	—	0.147	0.492

For applications over 4000 RPM, consult Martin.

Table 2. Tightening Torque Chart

Coupling Size	Standard Split Cover	Horizontal Split Cover	Vertical & Horizontal/Vertical Split Covers	
	Cover Bolt Torque (in-lbs)	Cover Bolt Torque (in-lbs)	Cover Bolt Torque (in-lbs)	Cover Side Bolt Torque (in-lbs)
GF10	Snap Ring	-	-	-
GF20	Snap Ring	300	150	Snap Ring
GF30	Snap Ring	600	150	Snap Ring
GF40	Snap Ring	1000	775	Snap Ring
GF50	Snap Ring	1000	775	Snap Ring
GF60	Snap Ring	2500	775	Snap Ring
GF70	775	2500	775	775
GF80	775	2500	1300	775
GF90	775	-	1300	775
GF100	1300	-	1300	1300
GF110	1300	-	1300	1300
GF120	1300	-	1300	1300