INDEX
SECTION N

IDLERS

PRODUCTS **PAGE**

INTRODUCTION . . . . . N-1 — N-5
- IDLER TYPES . . . . . N-2 — N-3
- APPLICATION N-4
- NOMENCLATURE N-5

CEMA C IDLERS . . . . . N-6 — N-25
- FEATURES & BENEFITS . . . . . N-6 — N-7
- EQUAL STEEL IDLERS & EQUAL IMPACT IDLERS . . . . . N-8 — N-9
- UNEQUAL STEEL IDLERS & UNEQUAL IMPACT IDLERS . . . . . N-10 — N-11
- STEEL RETURNS & RUBBER DISC RETURNS . . . . . N-12 — N-13
- STEEL V-RETURNS & RUBBER DISC V-RETURNS . . . . . N-14 — N-15
- STEEL FLAT CARRY & IMPACT FLAT CARRY . . . . . N-16 — N-17
- STEEL & IMPACT CHANNEL INSET IDLERS . . . . . N-18 — N-19
- SELF-ALIGNERS . . . . . N-20 — N-24
  - EQUAL STEEL IDLER SELF-ALIGNERS . . . . . N-20 — N-21
  - STEEL RETURN SELF-ALIGNERS & RUBBER DISC RETURN SELF-ALIGNERS . . . . . N-22 — N-23
  - STEEL FLAT CARRY SELF-ALIGNERS & RUBBER DISC FLAT CARRY SELF-ALIGNERS N-24
- LIVE SHAFT ROLLS N-25
  - IMPACT LIVE SHAFT ROLL & RUBBER DISC RETURN LIVE SHAFT ROLL N-25
- STEEL INVERTED V-RETURNS & RUBBER DISC INVERTED V-RETURNS . . . . . N-26 — N-27

CEMA D IDLERS . . . . . N-28 — N-45
- FEATURES & BENEFITS . . . . . N-28 — N-29
- EQUAL STEEL IDLERS & EQUAL IMPACT IDLERS . . . . . N-30 — N-31
- UNEQUAL STEEL IDLERS & UNEQUAL IMPACT IDLERS . . . . . N-32 — N-33
- STEEL RETURNS & RUBBER DISC RETURNS . . . . . N-34 — N-35
- STEEL V-RETURNS & RUBBER DISC V-RETURNS . . . . . N-36 — N-37
- STEEL FLAT CARRY & IMPACT FLAT CARRY . . . . . N-38 — N-39
- SELF-ALIGNERS . . . . . N-40 — N-43
  - EQUAL STEEL IDLER SELF-ALIGNERS N-40
  - STEEL RETURN SELF-ALIGNERS & RUBBER DISC RETURN SELF-ALIGNERS . . . . . N-41 — N-42
  - STEEL FLAT CARRY SELF-ALIGNER N-43
- LIVE SHAFT ROLLS
  - STEEL LIVE SHAFT ROLL & IMPACT LIVE SHAFT ROLL N-44
- STEEL INVERTED V-RETURNS & RUBBER DISC INVERTED V-RETURNS N-45

CEMA E IDLERS . . . . . N-46 — N-59
- FEATURES & BENEFITS . . . . . N-46 — N-47
- EQUAL STEEL IDLERS & EQUAL IMPACT IDLERS . . . . . N-48 — N-49
- UNEQUAL STEEL IDLERS & UNEQUAL IMPACT IDLERS . . . . . N-50 — N-51
- STEEL RETURNS & RUBBER DISC RETURNS . . . . . N-52 — N-53
- STEEL V-RETURNS & RUBBER DISC V-RETURNS N-54
- STEEL FLAT CARRY & IMPACT FLAT CARRY N-55
- SELF-ALIGNERS . . . . . N-56 — N-57
  - EQUAL STEEL IDLER SELF-ALIGNERS N-56
  - STEEL RETURN SELF-ALIGNERS & RUBBER DISC RETURN SELF-ALIGNERS N-57
- LIVE SHAFT ROLLS
  - STEEL LIVE SHAFT ROLL, IMPACT LIVE SHAFT ROLL & RUBBER DISC RETURN LIVE SHAFT ROLL . . . . . N-58— N-59
- STEEL INVERTED V-RETURNS & RUBBER DISC INVERTED V-RETURNS N-60

FRAMES . . . . . N-61 — N-64

FOOTPADS & BRACKETS . . . . . N-65 — N-66

SELF-ALIGNER ACCESSORIES N-67

IMPACT BEDS . . . . . N-68 — N-71

RETROFIT ROLLS N-72

SPECIAL CONSTRUCTION N-73

DATA SHEETS . . . . . N-74 — N-75

All dimensions in this catalog are for reference only, please contact Martin if dimensions are critical.
Martin Idlers meet or exceed all Conveyor Equipment Manufacturers Association (CEMA) load standards.

Idler Types

Equal Idlers are designed to support the belt and transport material on the carrying side of the belt. Troughing Idlers typically consist of 3 rolls with wing rolls at 20, 35 or 45 degree inclinations.

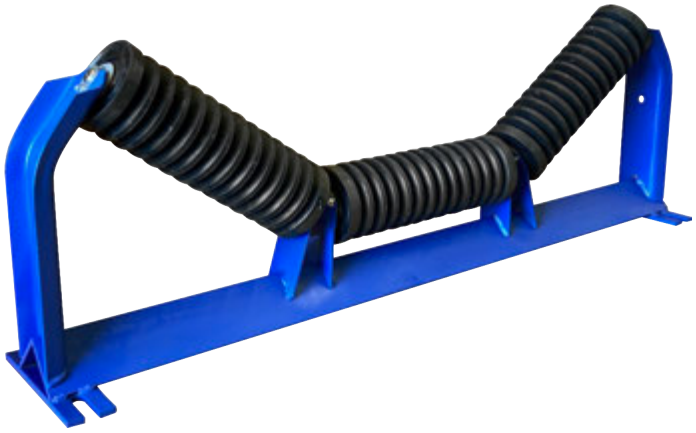

Impact Idlers are located at loading and transfer points. The rolls are equipped with rubber discs that cushion the impact and reduce costly belt damage. Impact Idler frames are reinforced to reduce frame flexing under load.

Equal Self-Aligners are used to assist with belts that may be misaligned due to environmental conditions. Equal Self-Aligners pivot to guide the belt back to the center of the troughing Idlers. Equal Self-Aligners can be troughing, steel return or flat carrying.

Unequal Idlers (Picking Idlers) are used due to their lower profile design. They typically consist of one longer roll in the center and two shorter inclined wing rolls. This design lays out the material and allows for easy sorting and separation. Unequal Idlers are available with steel or impact rolls.

Idler Types

Live Shaft Rolls can be provided with pillow block bearings. They are typically used in feeder applications or applications with higher belt tensions not suitable for conventional flat rolls with internal bearings. Live Shaft rolls are available in impact, spaced rubber disc and steel configurations.

Steel Channel Inset Idlers mount down inside a channel frame or vertical mounting surface and bolt horizontally. The low profile design is often used on portable equipment where reducing height is critical. Channel Inset Idlers are available in steel and reinforced impact designs.

Steel Returns are used to support the belt on the return side when the conveyed material is not sticky, corrosive or excessively abrasive. These rolls are available with a variety of coatings suitable for the specific application.

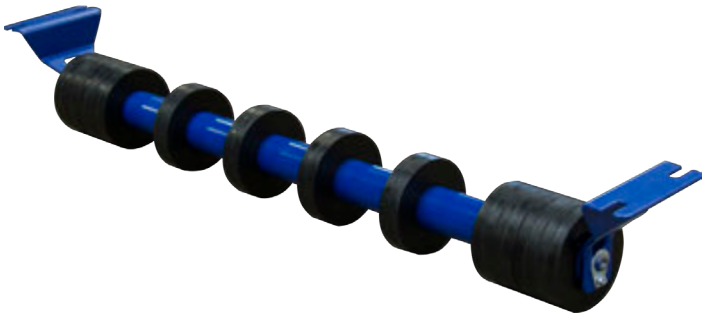

Impact Beds can be used at a material transfer point in place of impact Idlers to help with material impact or conveyor sealing. Impact beds are able to handle a much heavier impact force. The replaceable impact bars are made of rubber with a UHMW cap to reduce conveyor belt drag.

Rubber Disc Returns are used to support the belt on the return side when the conveyed material is sticky or abrasive. The spaced rubber discs flex and offer relief to avoid material build-up caused by excessive carryback. Rolls have flat, massed rubber ends to offer support if the belt mistracks from center.

Application

The following is a simplified conveyor used to illustrate basic belt conveyor components. Many variations of elevation, loading, discharge, Idlers and Idler spacing, pulleys, and accessories are possible.

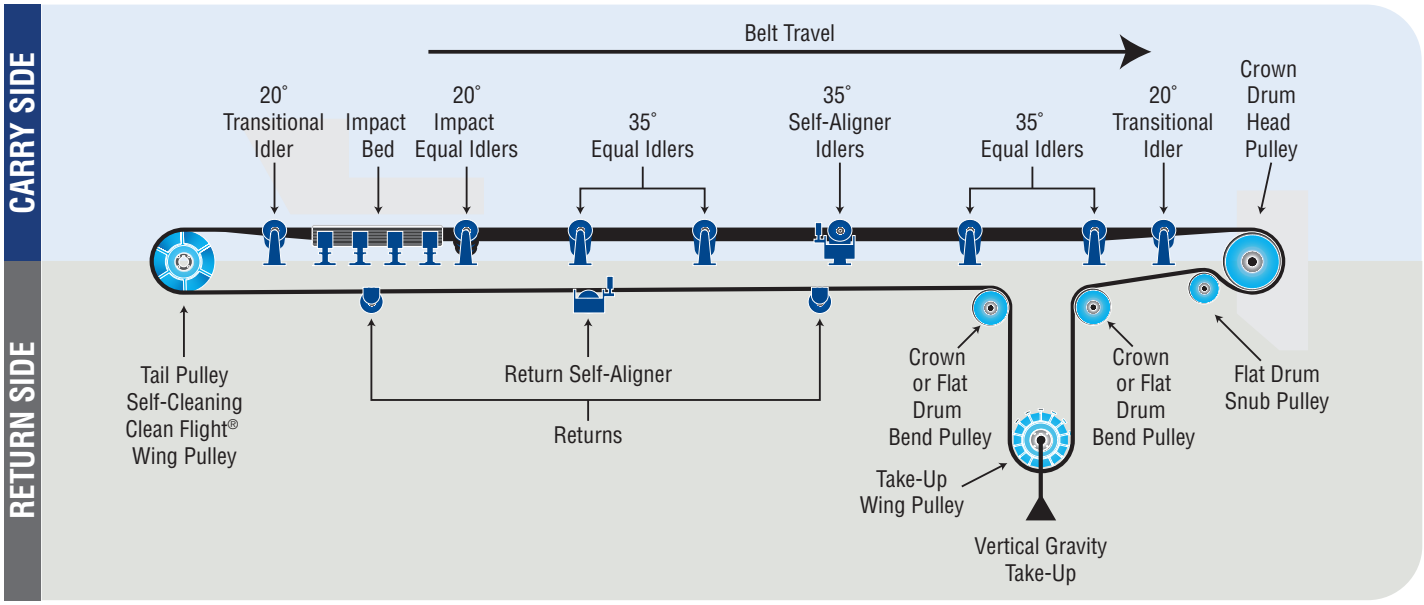

CARRY SIDE

Tail Pulley. A Pulley at the tail of the belt conveyor opposite the normal discharge end; may be a Wing Pulley, Clean Flight® Wing or Drum Pulley.

Transitional Idler. Typically found on either end of the conveyor. These Idlers have a smaller wing roll angle and help transition the conveyor belt to or from flat to full trough angle.

Impact Beds. Can be used at a material transfer point in place of impact Idlers to help with material impact or conveyor sealing. Impact beds are able to handle a much heavier impact force. The replaceable impact bars are made of rubber with a UHMW cap to reduce conveyor belt drag.

Impact Idlers. Rubber discs help to absorb and dissipate impact forces without transferring it through the shaft, bearings, Idler frames and conveyor structure. Impact Idler frames are reinforced for added strength.

Idlers. Support the conveyor belt and provide a trough to contain the material conveyed.

Equal Self-Aligners. Also known as training Idlers are a solution for a mistracking belt. If the belt contacts the guide rolls or the self-actuating shoe the top of the Idler pivots to steer the belt back into the trough.

Steel Flat Carry. Some conveyors might require the belt to run flat for various needs like picking, sorting, or inspecting.

Head Pulley. The Pulley at the discharge end of a conveyor belt; may be either a non-drive or a drive pulley. Usually it has a larger diameter than other pulleys in the system and is often lagged to increase traction and pulley life.

RETURN SIDE

Snub Pulley. Mounted close to the Drive Pulley on the return side of the belt, the Snub Pulley's primary job is to increase the angle of wrap around the Drive Pulley, thereby increasing traction. Its secondary purpose is reducing belt tension, which is important in maximizing conveyor component life. The Snub Pulley may be lagged for longer wear life.

Bend Pulley. The Bend Pulley is used for changing the direction of the belt running to the gravity take-up. It may be lagged for longer wear life.

Take-Up Pulley. A floating pulley with a counter weight to maintain adequate belt tension.

Return Idlers. Can be steel or spaced rubber discs. Typically mounted in drop brackets on the underside of the conveyor structure. The primary purpose of a Return roll is to support the empty belt on the return side of the conveyor.

Return Self-Aligner Idlers. Mounted on the return side of the belt. Supports an empty flat belt. The assembly pivots if the return side of the belt begins to mistrack guiding the belt back into the center of the Steel Return rolls.

V-Return. 2 rolls typically in a 10 degree V assembly. The V profile aids with belt tracking. Should be used on higher tension systems and when steel cord belts are used in the application.

Inverted V-Return. Mounted on the inside of the belt to aid with belt tracking on the return side into the tail pulley.

Live Shaft Rolls. Steel, spaced rubber disc or feeder impact solid rubber discs mounted on external pillow block or flange bearings. Typically used in applications with excessive impact and material load or in areas of a conveyor belt with elevated belt tensions.

Nomenclature

C 5 - 10 V 4 G - 36 - 09

CEMA Class
C, D, E

Roll Diameter
4, 5, 6, 7

Angle (Not for Steel Return & Flat Idlers)

10°	V-Return
15°	Inverted V-Return
20°, 35°, 45°	Idler

Idler Type

CARRY SIDE	
T	Equal Steel Idler
TI	Equal Impact Idler
TSA	Equal Steel Self-Aligner
TSS	Equal Steel Self-Aligner Shoe-Type
TO	Offset Idler
U	Unequal Steel Idler
UI	Unequal Impact Idler
CT	Steel Channel Inset Idler
CTI	Impact Channel Inset Idler
F	Steel Flat Carry**
FRD	Impact Flat Carry**
FSA	Steel Flat Carry Self-Aligner
LI	Impact Live Shaft Roll

RETURN SIDE	
R	Steel Return**
RRD	Rubber Disc Return**
URD	Urethane Disc Return**
RSA	Steel Return Self-Aligner*
RSS	Steel Return Self-Aligner Shoe-Type*
RRDSA	Rubber Disc Return Self-Aligner*
CR	Steel Channel Inset Return**
CRRD	Rubber Disc Channel Inset Return**
V	Steel V-Return*
VRD	Rubber Disc V-Return*
IV	Steel Inverted V-Return
IVRD	Rubber Disc Inverted V-Return
LR	Steel Live Shaft Roll
LRRD	Rubber Disc Live Shaft Roll

Wall Thickness Gauge
(Only Steel Rolls)
09, 07, 04

Belt Width

C	18" to 60"
D	24" to 72"
E	36" to 96"

Special Construction

A	Grain
B	Box Frame Idler
C	Catenary
G	Galvanized Frame
L	Urethane-Lagged Rolls
Q	Scale Quality
R	Removable Wing Bracket
RET	Retractable
TT	Adjustable/Transitional Idler
W	Wide Base
WR	Wire Rope

***Frame Rise/Drop for V, VRD, RSA, RRDSA**

1	1.5" Standard
4	4.5" Standard
4S	4.5" Belt Saver
7S	7" Belt Saver

****Bracket Rise/Drop for R, RRD, F, FRD**
Add the end of part number, examples:
C 5 - R - 36 - 09 - 4S
C 5 - FRD - 36 - 1

CEMA C Series
Idler Features & Benefits

The C Series Idler sets a standard for the industry

- Manufactured using sealed for life ball bearings for long maintenance free operation
- Martin Premium Triple Labyrinth Seal guard bearing protection
- Conform to all CEMA C load and dimensional requirements
- Protected roll weld
- Martin Triple Labyrinth Seal guard offers a balance of seal performance and low rolling resistance

CEMA C Load Ratings

Belt Width	Troughing Angle			Steel Return & Flat	Unequal Picking	Live Shaft
	20º	35º	45º			
18	900	900	900	475	-	1200
24	900	900	900	325	475	1200
30	900	900	900	250	475	1200
36	900	837	810	200	325	1200
42	850	791	765	150	250	1100
48	800	744	720	125	200	1000
54	750	698	675	CEMA D	150	875
60	700	650	630	CEMA D	125	780
Two Steel V-Returns (All)				500	-	-

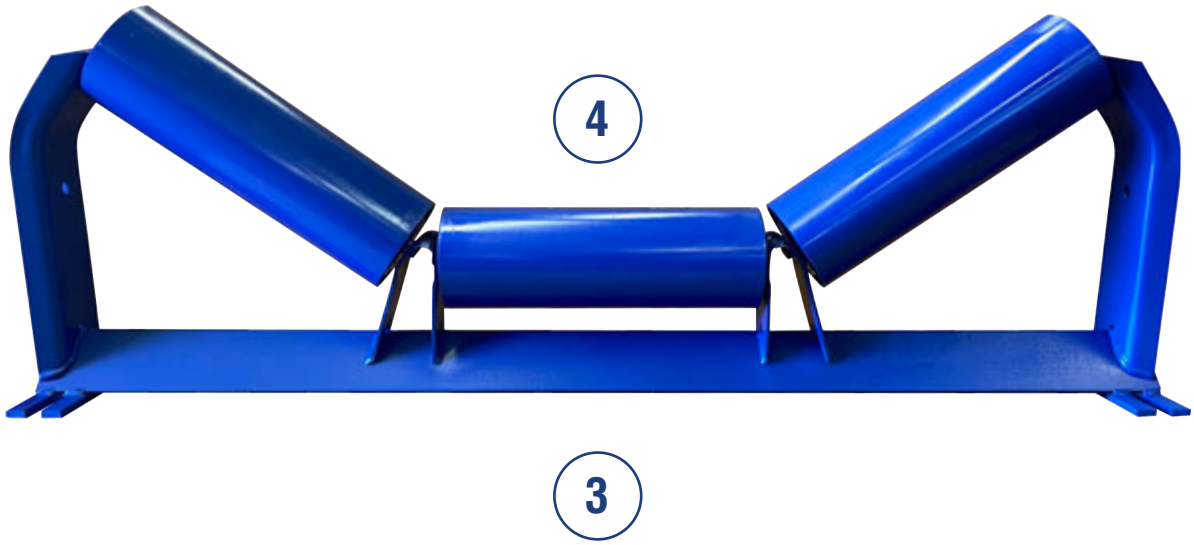

CEMA C Series
Idler Features & Benefits

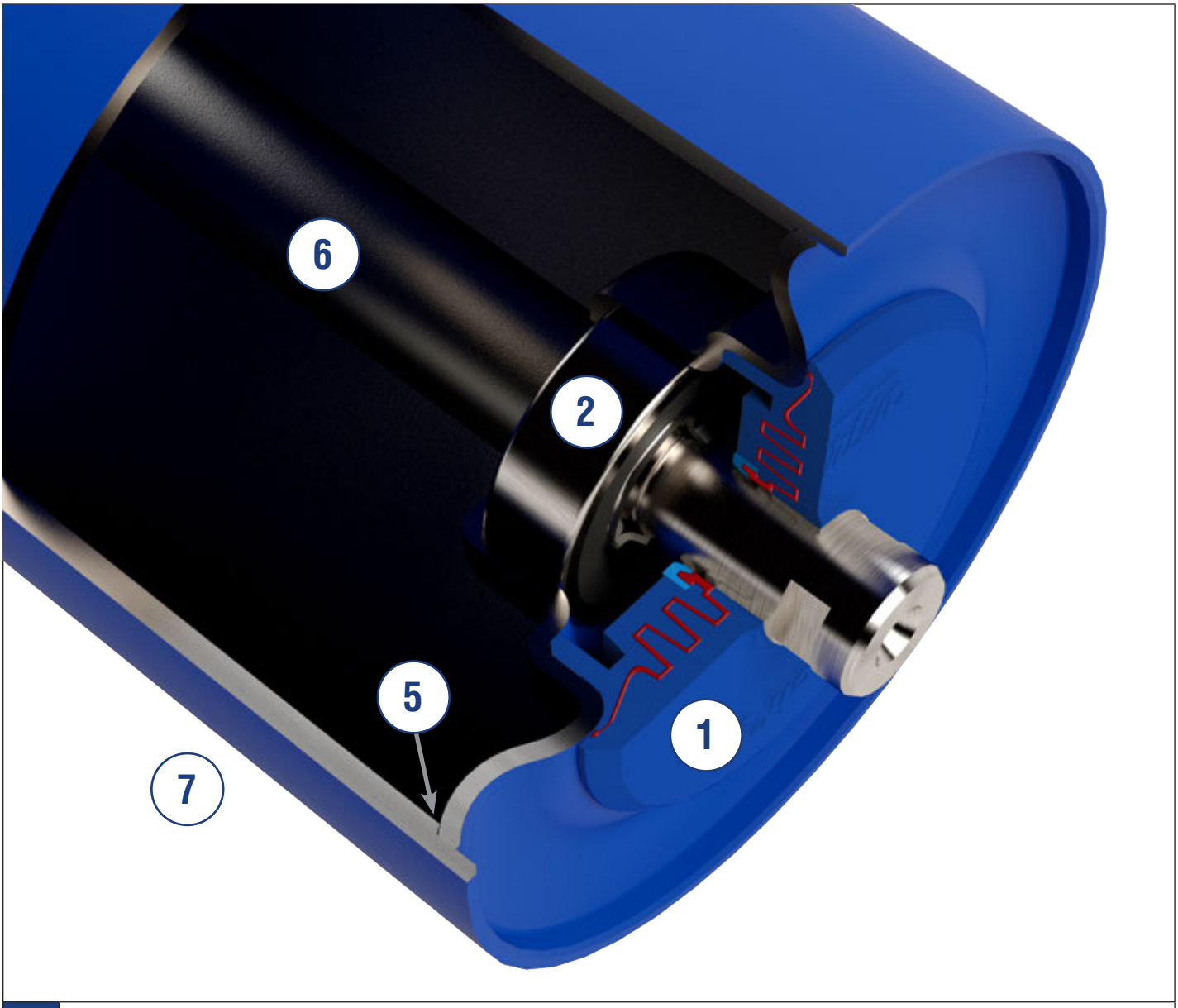

1	Martin Triple Labyrinth Seal design offers the following exclusive Martin bearing protection • External shield deters impurities from entering the bearing housing • Flinger design removes contaminates away from the bearing housing by centrifugal force • Grease is injected into the labyrinth chambers during manufacturing to add an additional layer of protection against bearing contamination • The contact lip seal adds an additional level of protection against moisture & fine particulate contaminants
2	CEMA C Idlers have sealed for life ball bearings
3	CEMA C Idlers standard product line is 18" to 60" belt widths
4	Martin CEMA C Idlers offer low rolling resistance that allows for lower operating cost
5	Recessed & protected bearing housing weld protects against wear from belt
6	Oversized, solid steel shaft machined to 20 mm for bearings
7	Martin Idlers have low TIR

CEMA C
Equal Steel Idlers

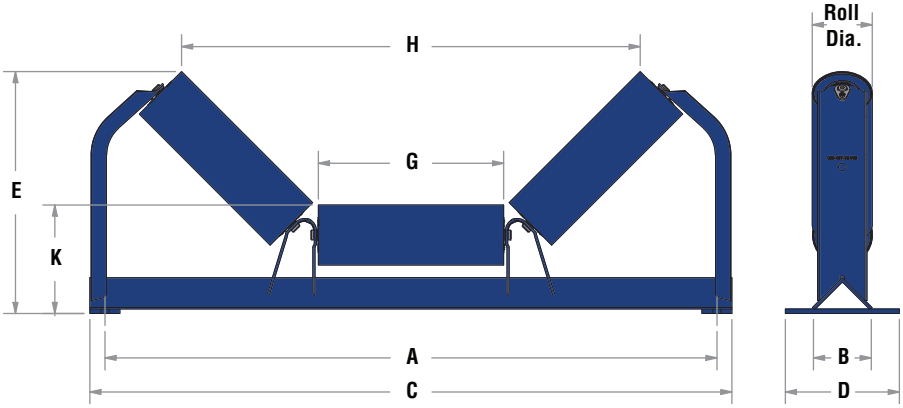

Belt Width	Standard Dimensions					Wide Base	
	A	B	C	D	G	Aw*	Cw*
18	27	5.5	29.5	8	6.75	33	35.5
20	29	5.5	31.5	8	7.63	35	37.5
24	33	5.5	35.5	8	8.94	39	41.5
30	39	5.5	41.5	9.5	11.13	45	47.5
36	45	5.5	47.5	9.5	13.25	51	53.5
42	51	5.5	53.5	9.5	15.44	57	59.5
48	57	5.5	59.5	9.5	17.63	63	65.5
54	63	7	65.5	11	19.75	69	71.5
60	69	7	71.5	11	21.75	75	77.5

*Dimension not shown; for wide base.

20º Equal Steel Idlers

Belt Width	4" Roll Diameter						5" Roll Diameter						6" Roll Diameter					
	Part Number	E	H	K	Wt.	Replace-ment Roll	Part Number	E	H	K	Wt.	Replace-ment Roll	Part Number	E	H	K	Wt.	Replace-ment Roll
18	C4-20T-18	10.5	21	8	37	C4-T-18	C5-20T-18-09	10.94	20.63	8.5	42	C5-T-18-09	C6-20T-18-09	11.44	20.25	9	46	C6-T-18-09
20	C4-20T-20	10.75	23.56	8	40	C4-T-20	C5-20T-20-09	11.25	23.25	8.5	45	C5-T-20-09	C6-20T-20-09	11.69	22.88	9	50	C6-T-20-09
24	C4-20T-24	11.25	27.25	8	44	C4-T-24	C5-20T-24-09	11.75	26.94	8.5	49	C5-T-24-09	C6-20T-24-09	12.19	26.63	9	54	C6-T-24-09
30	C4-20T-30	12.13	33.56	8.13	52	C4-T-30	C5-20T-30-09	12.63	33.25	8.63	59	C5-T-30-09	C6-20T-30-09	13.06	32.88	9.13	64	C6-T-30-09
36	C4-20T-36	12.81	39.68	8.13	59	C4-T-36	C5-20T-36-09	13.31	39.31	8.63	66	C5-T-36-09	C6-20T-36-09	13.75	39	9.13	73	C6-T-36-09
42	C4-20T-42	14	46	8.5	68	C4-T-42	C5-20T-42-09	14.44	45.63	9	76	C5-T-42-09	C6-20T-42-09	14.94	45.31	9.5	84	C6-T-42-09
48	C4-20T-48	14.75	52.31	8.5	74	C4-T-48	C5-20T-48-09	15.25	51.94	9	84	C5-T-48-09	C6-20T-48-09	15.68	51.63	9.5	92	C6-T-48-09
54	C4-20T-54	15.44	58.44	8.5	81	C4-T-54	C5-20T-54-09	15.94	58.06	9	93	C5-T-54-09	C6-20T-54-09	16.44	57.75	9.5	102	C6-T-54-09
60	C4-20T-60	16.5	64.19	8.88	88	C4-T-60	C5-20T-60-09	16.94	63.81	9.38	100	C5-T-60-09	C6-20T-60-09	17.44	63.5	9.88	110	C6-T-60-09

35º Equal Steel Idlers

Belt Width	4" Roll Diameter						5" Roll Diameter						6" Roll Diameter					
	Part Number	E	H	K	Wt.	Replace-ment Roll	Part Number	E	H	K	Wt.	Replace-ment Roll	Part Number	E	H	K	Wt.	Replace-ment Roll
18	C4-35T-18	12.13	19.13	8	38	C4-T-18	C5-35T-18-09	12.5	18.5	8.5	43	C5-T-18-09	C6-35T-18-09	12.94	17.88	9	47	C6-T-18-09
20	C4-35T-20	12.63	21.69	8	41	C4-T-20	C5-35T-20-09	13.06	21.13	8.5	45	C5-T-20-09	C6-35T-20-09	13.5	20.56	9	51	C6-T-20-09
24	C4-35T-24	13.38	24.94	8	45	C4-T-24	C5-35T-24-09	13.81	24.31	8.5	51	C5-T-24-09	C6-35T-24-09	14.18	23.75	9	56	C6-T-24-09
30	C4-35T-30	14.75	30.68	8.13	54	C4-T-30	C5-35T-30-09	15.19	30.13	8.63	61	C5-T-30-09	C6-35T-30-09	15.63	29.5	9.13	66	C6-T-30-09
36	C4-35T-36	16	36.25	8.13	61	C4-T-36	C5-35T-36-09	16.38	35.68	8.63	68	C5-T-36-09	C6-35T-36-09	16.81	35.13	9.13	75	C6-T-36-09
42	C4-35T-42	17.63	42.06	8.5	71	C4-T-42	C5-35T-42-09	18.06	41.5	9	79	C5-T-42-09	C6-35T-42-09	18.44	40.94	9.5	86	C6-T-42-09
48	C4-35T-48	18.88	47.81	8.5	77	C4-T-48	C5-35T-48-09	19.31	47.25	9	87	C5-T-48-09	C6-35T-48-09	19.69	46.69	9.5	95	C6-T-48-09
54	C4-35T-54	20.06	53.44	8.5	85	C4-T-54	C5-35T-54-09	20.5	52.88	9	96	C5-T-54-09	C6-35T-54-09	20.88	52.25	9.5	105	C6-T-54-09
60	C4-35T-60	21.56	58.69	8.88	92	C4-T-60	C5-35T-60-09	22	58.13	9.38	103	C5-T-60-09	C6-35T-60-09	22.44	57.5	9.88	113	C6-T-60-09

45º Equal Steel Idlers

Belt Width	4" Roll Diameter						5" Roll Diameter						6" Roll Diameter					
	Part Number	E	H	K	Wt.	Replace-ment Roll	Part Number	E	H	K	Wt.	Replace-ment Roll	Part Number	E	H	K	Wt.	Replace-ment Roll
18	C4-45T-18	13.19	17.94	8	40	C4-T-18	C5-45T-18-09	13.5	17.25	8.5	45	C5-T-18-09	C6-45T-18-09	13.88	16.5	9	49	C6-T-18-09
20	C4-45T-20	13.75	20.31	8	43	C4-T-20	C5-45T-20-09	14.13	19.63	8.5	48	C5-T-20-09	C6-45T-20-09	14.5	18.94	9	51	C6-T-20-09
24	C4-45T-24	14.75	23.25	8	47	C4-T-24	C5-45T-24-09	15.06	22.5	8.5	53	C5-T-24-09	C6-45T-24-09	15.44	21.81	9	58	C6-T-24-09
30	C4-45T-30	16.38	28.5	8.13	56	C4-T-30	C5-45T-30-09	16.75	27.75	8.63	63	C5-T-30-09	C6-45T-30-09	17.06	27.06	9.13	69	C6-T-30-09
36	C4-45T-36	17.88	33.63	8.13	63	C4-T-36	C5-45T-36-09	18.25	32.94	8.63	71	C5-T-36-09	C6-45T-36-09	18.63	32.18	9.13	77	C6-T-36-09
42	C4-45T-42	19.81	38.94	8.5	74	C4-T-42	C5-45T-42-09	20.19	38.19	9	82	C5-T-42-09	C6-45T-42-09	20.5	37.5	9.5	89	C6-T-42-09
48	C4-45T-48	21.38	44.18	8.5	80	C4-T-48	C5-45T-48-09	21.68	43.5	9	90	C5-T-48-09	C6-45T-48-09	22.06	42.75	9.5	98	C6-T-48-09
54	C4-45T-54	22.81	49.31	8.5	88	C4-T-54	C5-45T-54-09	23.25	48.63	9	99	C5-T-54-09	C6-45T-54-09	23.56	47.94	9.5	108	C6-T-54-09
60	C4-45T-60	24.63	54.13	8.88	95	C4-T-60	C5-45T-60-09	25	53.44	9.38	107	C5-T-60-09	C6-45T-60-09	25.31	52.75	9.88	117	C6-T-60-09

CEMA C
Equal Impact Idlers

Belt Width	Standard Dimensions					Wide Base	
	A	B	C	D	G	Aw*	Cw*
18	27	5.5	29.5	8	6.75	33	35.5
20	29	5.5	31.5	8	7.63	35	37.5
24	33	5.5	35.5	8	8.94	39	41.5
30	39	5.5	41.5	9.5	11.13	45	47.5
36	45	5.5	47.5	9.5	13.25	51	53.5
42	51	5.5	53.5	9.5	15.44	57	59.5
48	57	5.5	59.5	9.5	17.63	63	65.5
54	63	7	65.5	11	19.75	69	71.5
60	69	7	71.5	11	21.75	75	77.5

*Dimension not shown; for wide base.

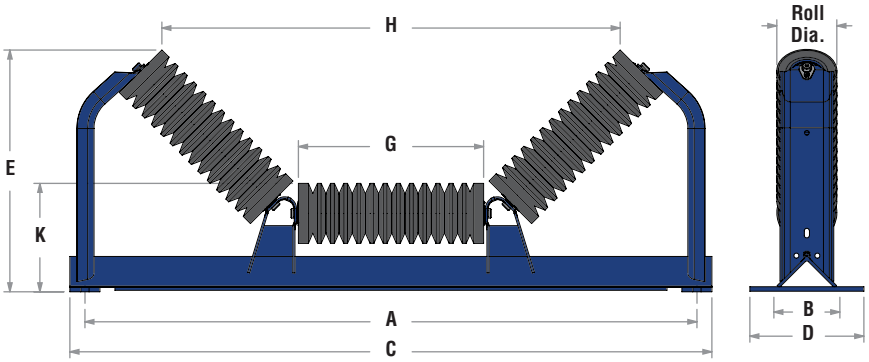

20º Equal Impact Idlers

Belt Width	4" Roll Diameter						5" Roll Diameter						6" Roll Diameter					
	Part Number	E	H	K	Wt.	Replacement Roll	Part Number	E	H	K	Wt.	Replacement Roll	Part Number	E	H	K	Wt.	Replacement Roll
18	C4-20TI-18	10.5	21	8	44	C4-TI-18	C5-20TI-18	10.94	20.63	8.5	48	C5-TI-18	C6-20TI-18	11.44	20.25	9	51	C6-TI-18
20	C4-20TI-20	10.75	23.56	8	49	C4-TI-20	C5-20TI-20	11.25	23.25	8.5	52	C5-TI-20	C6-20TI-20	11.69	22.88	9	56	C6-TI-20
24	C4-20TI-24	11.25	27.25	8	55	C4-TI-24	C5-20TI-24	11.75	26.94	8.5	58	C5-TI-24	C6-20TI-24	12.19	26.63	9	65	C6-TI-24
30	C4-20TI-30	12.13	33.56	8.13	65	C4-TI-30	C5-20TI-30	12.63	33.25	8.63	71	C5-TI-30	C6-20TI-30	13.06	32.88	9.13	77	C6-TI-30
36	C4-20TI-36	12.81	39.68	8.13	75	C4-TI-36	C5-20TI-36	13.31	39.31	8.63	81	C5-TI-36	C6-20TI-36	13.75	39	9.13	88	C6-TI-36
42	C4-20TI-42	14	46	8.5	90	C4-TI-42	C5-20TI-42	14.44	45.63	9	96	C5-TI-42	C6-20TI-42	14.94	45.31	9.5	107	C6-TI-42
48	C4-20TI-48	14.75	52.31	8.5	99	C4-TI-48	C5-20TI-48	15.25	51.94	9	107	C5-TI-48	C6-20TI-48	15.68	51.63	9.5	117	C6-TI-48
54	C4-20TI-54	15.44	58.44	8.5	110	C4-TI-54	C5-20TI-54	15.94	58.06	9	119	C5-TI-54	C6-20TI-54	16.44	57.75	9.5	130	C6-TI-54
60	C4-20TI-60	16.5	64.19	8.88	119	C4-TI-60	C5-20TI-60	16.94	63.81	9.38	130	C5-TI-60	C6-20TI-60	17.44	63.5	9.88	142	C6-TI-60

35º Equal Impact Idlers

Belt Width	4" Roll Diameter						5" Roll Diameter						6" Roll Diameter					
	Part Number	E	H	K	Wt.	Replacement Roll	Part Number	E	H	K	Wt.	Replacement Roll	Part Number	E	H	K	Wt.	Replacement Roll
18	C4-35TI-18	12.13	19.13	8	46	C4-TI-18	C5-35TI-18	12.5	18.5	8.5	49	C5-TI-18	C6-35TI-18	12.94	17.88	9	53	C6-TI-18
20	C4-35TI-20	12.63	21.69	8	50	C4-TI-20	C5-35TI-20	13.06	21.13	8.5	53	C5-TI-20	C6-35TI-20	13.5	20.56	9	58	C6-TI-20
24	C4-35TI-24	13.38	24.94	8	57	C4-TI-24	C5-35TI-24	13.81	24.31	8.5	60	C5-TI-24	C6-35TI-24	14.18	23.75	9	67	C6-TI-24
30	C4-35TI-30	14.75	30.68	8.13	67	C4-TI-30	C5-35TI-30	15.19	30.13	8.63	73	C5-TI-30	C6-35TI-30	15.63	29.5	9.13	79	C6-TI-30
36	C4-35TI-36	16	36.25	8.13	77	C4-TI-36	C5-35TI-36	16.38	35.68	8.63	83	C5-TI-36	C6-35TI-36	16.81	35.13	9.13	91	C6-TI-36
42	C4-35TI-42	17.63	42.06	8.5	93	C4-TI-42	C5-35TI-42	18.06	41.5	9	99	C5-TI-42	C6-35TI-42	18.44	40.94	9.5	109	C6-TI-42
48	C4-35TI-48	18.88	47.81	8.5	102	C4-TI-48	C5-35TI-48	19.31	47.25	9	110	C5-TI-48	C6-35TI-48	19.69	46.69	9.5	120	C6-TI-48
54	C4-35TI-54	20.06	53.44	8.5	113	C4-TI-54	C5-35TI-54	20.5	52.88	9	122	C5-TI-54	C6-35TI-54	20.88	52.25	9.5	133	C6-TI-54
60	C4-35TI-60	21.56	58.69	8.88	123	C4-TI-60	C5-35TI-60	22	58.13	9.38	133	C5-TI-60	C6-35TI-60	22.44	57.5	9.88	146	C6-TI-60

45º Equal Impact Idlers

Belt Width	4" Roll Diameter						5" Roll Diameter						6" Roll Diameter					
	Part Number	E	H	K	Wt.	Replacement Roll	Part Number	E	H	K	Wt.	Replacement Roll	Part Number	E	H	K	Wt.	Replacement Roll
18	C4-45TI-18	13.19	17.94	8	48	C4-TI-18	C5-45TI-18	13.5	17.25	8.5	51	C5-TI-18	C6-45TI-18	13.88	16.5	9	55	C6-TI-18
20	C4-45TI-20	13.75	20.31	8	50	C4-TI-20	C5-45TI-20	14.13	19.63	8.5	55	C5-TI-20	C6-45TI-20	14.5	18.94	9	60	C6-TI-20
24	C4-45TI-24	14.75	23.25	8	59	C4-TI-24	C5-45TI-24	15.06	22.5	8.5	62	C5-TI-24	C6-45TI-24	15.44	21.81	9	69	C6-TI-24
30	C4-45TI-30	16.38	28.5	8.13	70	C4-TI-30	C5-45TI-30	16.75	27.75	8.63	75	C5-TI-30	C6-45TI-30	17.06	27.06	9.13	81	C6-TI-30
36	C4-45TI-36	17.88	33.63	8.13	80	C4-TI-36	C5-45TI-36	18.25	32.94	8.63	86	C5-TI-36	C6-45TI-36	18.63	32.18	9.13	93	C6-TI-36
42	C4-45TI-42	19.81	38.94	8.5	95	C4-TI-42	C5-45TI-42	20.19	38.19	9	102	C5-TI-42	C6-45TI-42	20.5	37.5	9.5	112	C6-TI-42
48	C4-45TI-48	21.38	44.18	8.5	105	C4-TI-48	C5-45TI-48	21.68	43.5	9	114	C5-TI-48	C6-45TI-48	22.06	42.75	9.5	123	C6-TI-48
54	C4-45TI-54	22.81	49.31	8.5	117	C4-TI-54	C5-45TI-54	23.25	48.63	9	126	C5-TI-54	C6-45TI-54	23.56	47.94	9.5	137	C6-TI-54
60	C4-45TI-60	24.63	54.13	8.88	127	C4-TI-60	C5-45TI-60	25	53.44	9.38	137	C5-TI-60	C6-45TI-60	25.31	52.75	9.88	149	C6-TI-60

CEMA C
Unequal Steel Idlers

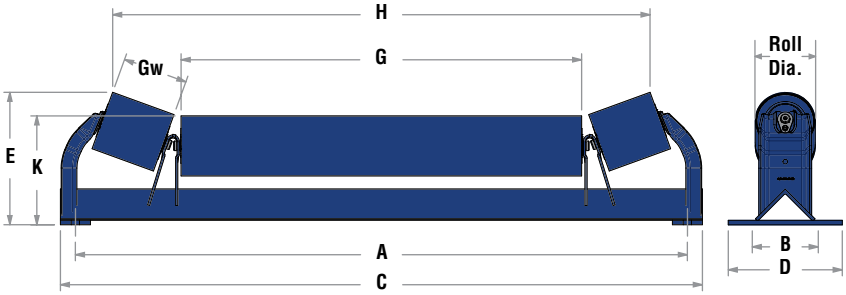

Belt Width	Standard Dimensions				Wide Base	
	A	B	C	D	Aw*	Cw*
24	33	5.5	35.5	9.5	39	41.5
30	39	5.5	41.5	9.5	45	47.5
36	45	5.5	47.5	9.5	51	53.5
42	51	5.5	53.5	9.5	57	59.5
48	57	5.5	59.5	9.5	63	65.5
54	63	7	65.5	11	69	71.5
60	69	7	71.5	11	75	77.5

*Dimension not shown; for wide base.

20º Unequal Steel Idlers

Belt Width	G	Gw	4" Roll Diameter							5" Roll Diameter						
			Part Number	E	H	K	Wt.	Replacement Center Roll	Replacement Wing Roll	Part Number	E	H	K	Wt.	Replacement Center Roll	Replacement Wing Roll
24	15.44	5.44	C4-20U-24	10.00	27.19	8.00	41	C4-T-42	C4-T-14	C5-20U-24-09	10.50	26.88	8.50	48	C5-T-42-09	C5-T-14-09
30	21.38	5.44	C4-20U-30	10.19	33.13	8.13	48	C4-R-18		C5-20U-30-09	10.63	32.81	8.63	56	C5-R-18-09	
36	27.38	5.44	C4-20U-36	10.19	39.13	8.13	54	C4-R-24		C5-20U-36-09	10.63	38.81	8.63	63	C5-R-24-09	
42	33.38	5.44	C4-20U-42	10.56	45.13	8.50	68	C4-R-30		C5-20U-42-09	11.00	44.81	9.00	72	C5-R-30-09	
48	39.38	5.44	C4-20U-48	10.56	51.13	8.50	75	C4-R-36		C5-20U-48-09	11.00	50.81	9.00	79	C5-R-36-09	
54	45.38	5.44	C4-20U-54	10.56	57.13	8.50	82	C4-R-42		C5-20U-54-09	11.00	56.81	9.00	87	C5-R-42-09	
60	51.38	5.44	C4-20U-60	10.56	63.13	8.88	93	C4-R-48		C5-20U-60-09	11.00	62.81	9.38	94	C5-R-48-09	

Belt Width	G	Gw	6" Roll Diameter						
			Part Number	E	H	K	Wt.	Replacement Center Roll	Replacement Wing Roll
24	15.44	5.44	C6-20U-24-09	11.00	26.50	9.00	53	C6-T-42-09	C6-T-14-09
30	21.38	5.44	C6-20U-30-09	11.13	32.44	9.13	62	C6-R-18-09	
36	27.38	5.44	C6-20U-36-09	11.13	38.44	9.13	69	C6-R-24-09	
42	33.38	5.44	C6-20U-42-09	11.50	44.44	9.50	80	C6-R-30-09	
48	39.38	5.44	C6-20U-48-09	11.50	50.44	9.50	87	C6-R-36-09	
54	45.38	5.44	C6-20U-54-09	11.50	56.44	9.50	96	C6-R-42-09	
60	51.38	5.44	C6-20U-60-09	11.50	62.44	9.88	104	C6-R-48-09	

35º Unequal Steel Idlers

Belt Width	G	Gw	4" Roll Diameter							5" Roll Diameter						
			Part Number	E	H	K	Wt.	Replacement Center Roll	Replacement Wing Roll	Part Number	E	H	K	Wt.	Replacement Center Roll	Replacement Wing Roll
24	13.25	6.75	C4-35U-24	12.13	25.63	8.00	43	C4-T-36	C4-T-18	C5-35U-24-09	12.50	25.00	8.50	50	C5-T-36-09	C5-T-18-09
30	15.44	8.94	C4-35U-30	13.50	31.44	8.13	52	C4-T-42	C4-T-24	C5-35U-30-09	13.94	30.81	8.63	60	C5-T-42-09	C5-T-24-09
36	19.75	8.94	C4-35U-36	13.50	35.69	8.13	56	C4-T-54		C5-35U-36-09	13.94	35.13	8.63	65	C5-T-54-09	
42	21.38	11.13	C4-35U-42	15.19	40.94	8.50	71	C4-R-18	C4-T-30	C5-35U-42-09	15.56	40.38	9.00	76	C5-R-18-09	C5-T-30-09
48	27.38	11.13	C4-35U-48	15.19	46.94	8.50	78	C4-R-24		C5-35U-48-09	15.56	46.38	9.00	82	C5-R-24-09	
54	33.38	11.13	C4-35U-54	15.19	52.94	8.50	85	C4-R-30		C5-35U-54-09	15.56	52.38	9.00	90	C5-R-30-09	
60	39.38	11.13	C4-35U-60	15.19	58.94	8.88	96	C4-R-36		C5-35U-60-09	15.56	58.38	9.38	97	C5-R-36-09	

Belt Width	G	Gw	6" Roll Diameter						
			Part Number	E	H	K	Wt.	Replacement Center Roll	Replacement Wing Roll
24	13.25	6.75	C6-35U-24-09	12.94	24.50	9.00	55	C6-T-36-09	C6-T-18-09
30	15.44	8.94	C6-35U-30-09	14.31	30.25	9.13	66	C6-T-42-09	C6-T-24-09
36	19.75	8.94	C6-35U-36-09	14.31	34.56	9.13	72	C6-T-54-09	
42	21.38	11.13	C6-35U-42-09	16.00	39.75	9.50	83	C6-R-18-09	C6-T-30-09
48	27.38	11.13	C6-35U-48-09	16.00	45.75	9.50	90	C6-R-24-09	
54	33.38	11.13	C6-35U-54-09	16.00	51.75	9.50	99	C6-R-30-09	
60	39.38	11.13	C6-35U-60-09	16.00	57.75	9.88	107	C6-R-36-09	

CEMA C
Unequal Impact Idlers

Belt Width	Standard Dimensions				Wide Base	
	A	B	C	D	Aw*	Cw*
24	33	5.5	35.5	9.5	39	41.5
30	39	5.5	41.5	9.5	45	47.5
36	45	5.5	47.5	9.5	51	53.5
42	51	5.5	53.5	9.5	57	59.5
48	57	5.5	59.5	9.5	63	65.5
54	63	7	65.5	11	69	71.5
60	69	7	71.5	11	75	77.5

*Dimension not shown; for wide base.

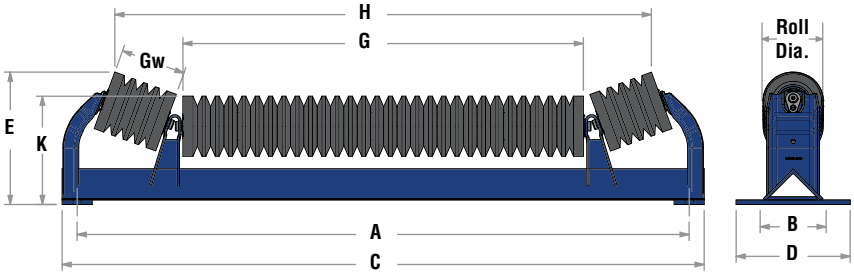

20º Unequal Impact Idlers

Belt Width	G	GW	5" Roll Diameter							6" Roll Diameter						
			Part Number	E	H	K	Wt.	Replacement Center Roll	Replacement Wing Roll	Part Number	E	H	K	Wt.	Replacement Center Roll	Replacement Wing Roll
24	15.44	5.44	C5-20UI-24	10.50	26.88	8.50	57	C5-TI-42	C5-TI-14	C6-20UI-24	11.00	26.50	9.00	62	C6-TI-42	C6-TI-14
30	21.38	5.44	C5-20UI-30	10.63	32.81	8.63	68	C5-FRD-18		C6-20UI-30	11.13	32.44	9.13	74	C6-FRD-18	
36	27.38	5.44	C5-20UI-36	10.63	38.81	8.63	78	C5-FRD-24		C6-20UI-36	11.13	38.44	9.13	85	C6-FRD-24	
42	33.38	5.44	C5-20UI-42	11.00	44.81	9.00	92	C5-FRD-30		C6-20UI-42	11.50	44.44	9.50	100	C6-FRD-30	
48	39.38	5.44	C5-20UI-48	11.00	50.81	9.00	102	C5-FRD-36		C6-20UI-48	11.50	50.44	9.50	111	C6-FRD-36	
54	45.38	5.44	C5-20UI-54	11.00	56.81	9.00	113	C5-FRD-42		C6-20UI-54	11.50	56.44	9.50	123	C6-FRD-42	
60	51.38	5.44	C5-20UI-60	11.00	62.81	9.38	123	C5-FRD-48		C6-20UI-60	11.50	62.44	9.88	134	C6-FRD-48	

35º Unequal Impact Idlers

Belt Width	G	GW	5" Roll Diameter							6" Roll Diameter						
			Part Number	E	H	K	Wt.	Replacement Center Roll	Replacement Wing Roll	Part Number	E	H	K	Wt.	Replacement Center Roll	Replacement Wing Roll
24	13.25	6.75	C5-35UI-24	12.50	25.00	8.50	59	C5-TI-36	C5-TI-18	C6-35UI-24	12.94	24.50	9.00	64	C6-TI-36	C6-TI-18
30	15.44	8.94	C5-35UI-30	13.94	30.81	8.63	72	C5-TI-42	C5-TI-24	C6-35UI-30	14.31	30.25	9.13	80	C6-TI-42	C6-TI-24
36	19.75	8.94	C5-35UI-36	13.94	35.13	8.63	80	C5-TI-54		C6-35UI-36	14.31	34.56	9.13	88	C6-TI-54	
42	21.38	11.13	C5-35UI-42	15.56	40.38	9.00	95	C5-FRD-18	C5-TI-30	C6-35UI-42	16.00	39.75	9.50	103	C6-FRD-18	C6-TI-30
48	27.38	11.13	C5-35UI-48	15.56	46.38	9.00	105	C5-FRD-24		C6-35UI-48	16.00	45.75	9.50	114	C6-FRD-24	
54	33.38	11.13	C5-35UI-54	15.56	52.38	9.00	116	C5-FRD-30		C6-35UI-54	16.00	51.75	9.50	126	C6-FRD-30	
60	39.38	11.13	C5-35UI-60	15.56	58.38	9.38	126	C5-FRD-36		C6-35UI-60	16.00	57.75	9.88	137	C6-FRD-36	

CEMA C
Steel Returns

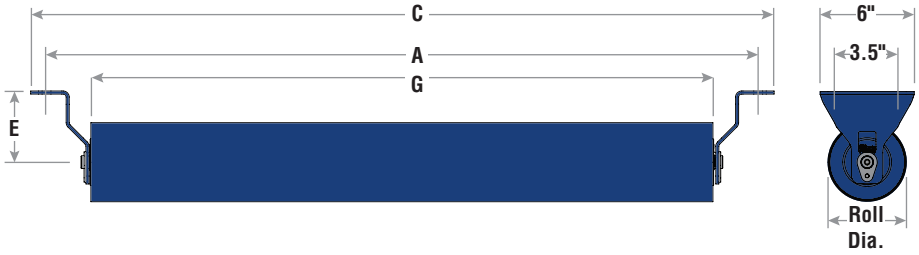

Belt Width	Standard Dimensions		
	A	C	G
18	27	29	21.38
20	29	31	23.38
24	33	35	27.38
30	39	41	33.38
36	45	47	39.38
42	51	53	45.38
48	57	59	51.38
54	63	65	57.38
60	69	71	63.38

Steel Returns (E = 1.5")

Belt Width	4" Roll Diameter			5" Roll Diameter			6" Roll Diameter		
	Part Number	Wt.	Replacement Roll	Part Number	Wt.	Replacement Roll	Part Number	Wt.	Replacement Roll
18	C4-R-18-1	17	C4-R-18	C5-R-18-09-1	20	C5-R-18-09	C6-R-18-09-1	24	C6-R-18-09
20	C4-R-20-1	18	C4-R-20	C5-R-20-09-1	22	C5-R-20-09	C6-R-20-09-1	26	C6-R-20-09
24	C4-R-24-1	20	C4-R-24	C5-R-24-09-1	25	C5-R-24-09	C6-R-24-09-1	30	C6-R-24-09
30	C4-R-30-1	24	C4-R-30	C5-R-30-09-1	30	C5-R-30-09	C6-R-30-09-1	35	C6-R-30-09
36	C4-R-36-1	27	C4-R-36	C5-R-36-09-1	35	C5-R-36-09	C6-R-36-09-1	41	C6-R-36-09
42	C4-R-42-1	31	C4-R-42	C5-R-42-09-1	40	C5-R-42-09	C6-R-42-09-1	46	C6-R-42-09
48	C4-R-48-1	34	C4-R-48	C5-R-48-09-1	45	C5-R-48-09	C6-R-48-09-1	52	C6-R-48-09
*54	C4-R-54-1	38	C4-R-54	C5-R-54-09-1	49	C5-R-54-09	C6-R-54-09-1	57	C6-R-54-09
*60	C4-R-60-1	41	C4-R-60	C5-R-60-09-1	54	C5-R-60-09	C6-R-60-09-1	63	C6-R-60-09

Steel Returns (E = 4.5")

Belt Width	4" Roll Diameter			5" Roll Diameter			6" Roll Diameter		
	Part Number	Wt.	Replacement Roll	Part Number	Wt.	Replacement Roll	Part Number	Wt.	Replacement Roll
18	C4-R-18-4	19	C4-R-18	C5-R-18-09-4	22	C5-R-18-09	C6-R-18-09-4	26	C6-R-18-09
20	C4-R-20-4	21	C4-R-20	C5-R-20-09-4	24	C5-R-20-09	C6-R-20-09-4	28	C6-R-20-09
24	C4-R-24-4	25	C4-R-24	C5-R-24-09-4	27	C5-R-24-09	C6-R-24-09-4	32	C6-R-24-09
30	C4-R-30-4	28	C4-R-30	C5-R-30-09-4	32	C5-R-30-09	C6-R-30-09-4	37	C6-R-30-09
36	C4-R-36-4	32	C4-R-36	C5-R-36-09-4	37	C5-R-36-09	C6-R-36-09-4	43	C6-R-36-09
42	C4-R-42-4	35	C4-R-42	C5-R-42-09-4	42	C5-R-42-09	C6-R-42-09-4	48	C6-R-42-09
48	C4-R-48-4	39	C4-R-48	C5-R-48-09-4	47	C5-R-48-09	C6-R-48-09-4	54	C6-R-48-09
*54	C4-R-54-4	43	C4-R-54	C5-R-54-09-4	51	C5-R-54-09	C6-R-54-09-4	59	C6-R-54-09
*60	C4-R-60-4	48	C4-R-60	C5-R-60-09-4	56	C5-R-60-09	C6-R-60-09-4	65	C6-R-60-09

Steel Returns (E = 4.5", Belt Saver)

Belt Width	4" Roll Diameter			5" Roll Diameter			6" Roll Diameter		
	Part Number	Wt.	Replacement Roll	Part Number	Wt.	Replacement Roll	Part Number	Wt.	Replacement Roll
18	C4-R-18-4S	20	C4-R-18	C5-R-18-09-4S	23	C5-R-18-09	C6-R-18-09-4S	27	C6-R-18-09
20	C4-R-20-4S	22	C4-R-20	C5-R-20-09-4S	25	C5-R-20-09	C6-R-20-09-4S	29	C6-R-20-09
24	C4-R-24-4S	24	C4-R-24	C5-R-24-09-4S	28	C5-R-24-09	C6-R-24-09-4S	33	C6-R-24-09
30	C4-R-30-4S	28	C4-R-30	C5-R-30-09-4S	33	C5-R-30-09	C6-R-30-09-4S	38	C6-R-30-09
36	C4-R-36-4S	32	C4-R-36	C5-R-36-09-4S	38	C5-R-36-09	C6-R-36-09-4S	44	C6-R-36-09
42	C4-R-42-4S	36	C4-R-42	C5-R-42-09-4S	43	C5-R-42-09	C6-R-42-09-4S	49	C6-R-42-09
48	C4-R-48-4S	40	C4-R-48	C5-R-48-09-4S	48	C5-R-48-09	C6-R-48-09-4S	55	C6-R-48-09
*54	C4-R-54-4S	45	C4-R-54	C5-R-54-09-4S	52	C5-R-54-09	C6-R-54-09-4S	60	C6-R-54-09
*60	C4-R-60-4S	49	C4-R-60	C5-R-60-09-4S	57	C5-R-60-09	C6-R-60-09-4S	66	C6-R-60-09

*CEMA recommends class D.

Note: Brackets Also Sold Separately (page N-65).

CEMA C
Rubber Disc Returns

Belt Width	Standard Dimensions		
	A	C	G
18	27	29	21.13
20	29	31	23.13
24	33	35	27.13
30	39	41	33.13
36	45	47	39.13
42	51	53	45.13
48	57	59	51.13
54	63	65	57.13
60	69	71	63.13

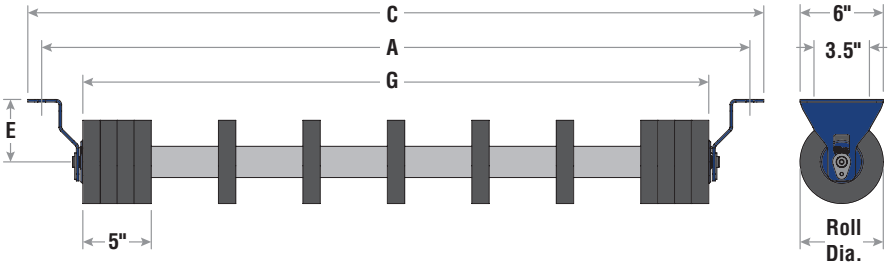

Rubber Disc Returns (E = 1.5")

Belt Width	4" Roll Diameter			5" Roll Diameter			6" Roll Diameter		
	Part Number	Wt.	Replacement Roll	Part Number	Wt.	Replacement Roll	Part Number	Wt.	Replacement Roll
18	C4-RRD-18-1	19	C4-RRD-18	C5-RRD-18-1	22	C5-RRD-18	C6-RRD-18-1	25	C6-RRD-18
20	C4-RRD-20-1	20	C4-RRD-20	C5-RRD-20-1	23	C5-RRD-20	C6-RRD-20-1	26	C6-RRD-20
24	C4-RRD-24-1	23	C4-RRD-24	C5-RRD-24-1	26	C5-RRD-24	C6-RRD-24-1	30	C6-RRD-24
30	C4-RRD-30-1	27	C4-RRD-30	C5-RRD-30-1	30	C5-RRD-30	C6-RRD-30-1	35	C6-RRD-30
36	C4-RRD-36-1	31	C4-RRD-36	C5-RRD-36-1	35	C5-RRD-36	C6-RRD-36-1	39	C6-RRD-36
42	C4-RRD-42-1	35	C4-RRD-42	C5-RRD-42-1	39	C5-RRD-42	C6-RRD-42-1	44	C6-RRD-42
48	C4-RRD-48-1	39	C4-RRD-48	C5-RRD-48-1	43	C5-RRD-48	C6-RRD-48-1	49	C6-RRD-48
*54	C4-RRD-54-1	43	C4-RRD-54	C5-RRD-54-1	48	C5-RRD-54	C6-RRD-54-1	53	C6-RRD-54
*60	C4-RRD-60-1	47	C4-RRD-60	C5-RRD-60-1	52	C5-RRD-60	C6-RRD-60-1	58	C6-RRD-60

Rubber Disc Returns (E = 4.5")

Belt Width	4" Roll Diameter			5" Roll Diameter			6" Roll Diameter		
	Part Number	Wt.	Replacement Roll	Part Number	Wt.	Replacement Roll	Part Number	Wt.	Replacement Roll
18	C4-RRD-18-4	21	C4-RRD-18	C5-RRD-18-4	24	C5-RRD-18	C6-RRD-18-4	27	C6-RRD-18
20	C4-RRD-20-4	22	C4-RRD-20	C5-RRD-20-4	25	C5-RRD-20	C6-RRD-20-4	28	C6-RRD-20
24	C4-RRD-24-4	25	C4-RRD-24	C5-RRD-24-4	28	C5-RRD-24	C6-RRD-24-4	32	C6-RRD-24
30	C4-RRD-30-4	29	C4-RRD-30	C5-RRD-30-4	32	C5-RRD-30	C6-RRD-30-4	37	C6-RRD-30
36	C4-RRD-36-4	33	C4-RRD-36	C5-RRD-36-4	37	C5-RRD-36	C6-RRD-36-4	41	C6-RRD-36
42	C4-RRD-42-4	37	C4-RRD-42	C5-RRD-42-4	41	C5-RRD-42	C6-RRD-42-4	46	C6-RRD-42
48	C4-RRD-48-4	41	C4-RRD-48	C5-RRD-48-4	45	C5-RRD-48	C6-RRD-48-4	51	C6-RRD-48
*54	C4-RRD-54-4	45	C4-RRD-54	C5-RRD-54-4	50	C5-RRD-54	C6-RRD-54-4	55	C6-RRD-54
*60	C4-RRD-60-4	49	C4-RRD-60	C5-RRD-60-4	54	C5-RRD-60	C6-RRD-60-4	60	C6-RRD-60

Rubber Disc Returns (E = 4.5", Belt Saver)

Belt Width	4" Roll Diameter			5" Roll Diameter			6" Roll Diameter		
	Part Number	Wt.	Replacement Roll	Part Number	Wt.	Replacement Roll	Part Number	Wt.	Replacement Roll
18	C4-RRD-18-4S	22	C4-RRD-18	C5-RRD-18-4S	25	C5-RRD-18	C6-RRD-18-4S	28	C6-RRD-18
20	C4-RRD-20-4S	23	C4-RRD-20	C5-RRD-20-4S	26	C5-RRD-20	C6-RRD-20-4S	29	C6-RRD-20
24	C4-RRD-24-4S	26	C4-RRD-24	C5-RRD-24-4S	29	C5-RRD-24	C6-RRD-24-4S	33	C6-RRD-24
30	C4-RRD-30-4S	30	C4-RRD-30	C5-RRD-30-4S	33	C5-RRD-30	C6-RRD-30-4S	38	C6-RRD-30
36	C4-RRD-36-4S	34	C4-RRD-36	C5-RRD-36-4S	38	C5-RRD-36	C6-RRD-36-4S	42	C6-RRD-36
42	C4-RRD-42-4S	38	C4-RRD-42	C5-RRD-42-4S	42	C5-RRD-42	C6-RRD-42-4S	47	C6-RRD-42
48	C4-RRD-48-4S	42	C4-RRD-48	C5-RRD-48-4S	46	C5-RRD-48	C6-RRD-48-4S	52	C6-RRD-48
*54	C4-RRD-54-4S	46	C4-RRD-54	C5-RRD-54-4S	51	C5-RRD-54	C6-RRD-54-4S	56	C6-RRD-54
*60	C4-RRD-60-4S	50	C4-RRD-60	C5-RRD-60-4S	55	C5-RRD-60	C6-RRD-60-4S	61	C6-RRD-60

*CEMA recommends class D.

Note: Brackets Also Sold Separately (page N-65).

CEMA C
Steel V-Returns

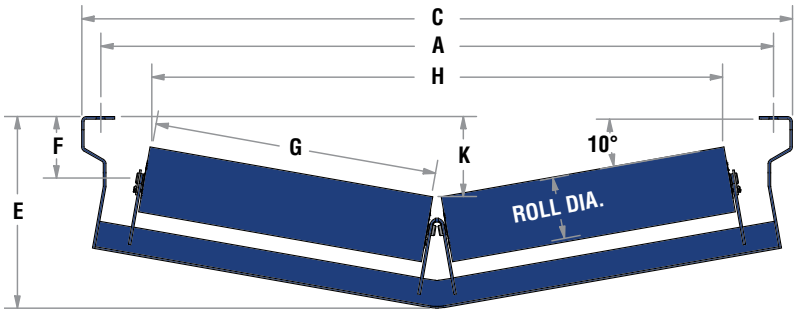

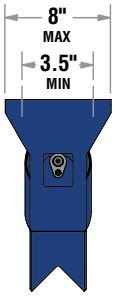

Belt Width	Standard Dimensions		
	A	C	G
24	33	35.88	13.25
30	39	41.88	17.63
36	45	47.88	19.75
42	51	53.88	21.38
48	57	59.88	26.00
54	63	65.88	28.88
60	69	71.88	31.88

Steel V-Returns (F = 4.5")

Belt Width	5" Roll Diameter						6" Roll Diameter					
	Part Number	E	H	K	Wt.	Replacement Roll	Part Number	E	H	K	Wt.	Replacement Roll
24	C5-10V4-24-09	12.94	26.75	4.50	46	C5-T-36-09	C6-10V4-24-09	12.94	26.56	4.00	51	C6-T-36-09
30	C5-10V4-30-09	13.44	35.31	5.00	55	C5-T-48-09	C6-10V4-30-09	13.44	35.19	4.50	61	C6-T-48-09
36	C5-10V4-36-09	14.00	39.50	5.56	60	C5-T-54-09	C6-10V4-36-09	14.00	39.38	5.00	67	C6-T-54-09
42	C5-10V4-42-09	14.50	43.50	6.00	66	C5-T-60-09	C6-10V4-42-09	14.50	43.31	5.38	72	C6-T-60-09
48	C5-10V4-48-09	15.00	51.81	6.63	80	D5-T-72-09	C6-10V4-48-09	15.00	51.69	6.13	88	D6-T-72-09
54	C5-10V4-54-09	15.56	57.50	7.13	81	C5-V-54-09	C6-10V4-54-09	15.56	57.31	6.63	89	C6-V-54-09
60	C5-10V4-60-09	16.13	63.44	7.69	88	C5-V-60-09	C6-10V4-60-09	16.13	63.25	7.19	97	C6-V-60-09

Steel V-Returns (F =7")

Belt Width	5" Roll Diameter						6" Roll Diameter					
	Part Number	E	H	K	Wt.	Replacement Roll	Part Number	E	H	K	Wt.	Replacement Roll
24	C5-10V7-24-09	15.56	26.75	7.13	48	C5-T-36-09	C6-10V7-24-09	15.56	26.56	6.63	52	C6-T-36-09
30	C5-10V7-30-09	16.06	35.31	7.63	55	C5-T-48-09	C6-10V7-30-09	16.06	35.19	7.13	61	C6-T-48-09
36	C5-10V7-36-09	16.63	39.50	8.19	62	C5-T-54-09	C6-10V7-36-09	16.63	39.38	7.69	68	C6-T-54-09
42	C5-10V7-42-09	17.13	43.50	8.69	67	C5-T-60-09	C6-10V7-42-09	17.13	43.31	8.25	74	C6-T-60-09
48	C5-10V7-48-09	17.69	51.81	9.25	82	D5-T-72-09	C6-10V7-48-09	17.69	51.69	8.75	89	D6-T-72-09
54	C5-10V7-54-09	18.19	57.50	9.75	82	C5-V-54-09	C6-10V7-54-09	18.19	57.31	9.25	91	C6-V-54-09
60	C5-10V7-60-09	18.75	63.44	10.25	89	C5-V-60-09	C6-10V7-60-09	18.75	63.25	9.81	98	C6-V-60-09

CEMA C
Rubber Disc V-Returns

Belt Width	Standard Dimensions		
	A	C	G
24	33	35.88	13.25
30	39	41.88	17.63
36	45	47.88	19.75
42	51	53.88	21.38
48	57	59.88	26.00
54	63	65.88	28.88
60	69	71.88	31.88

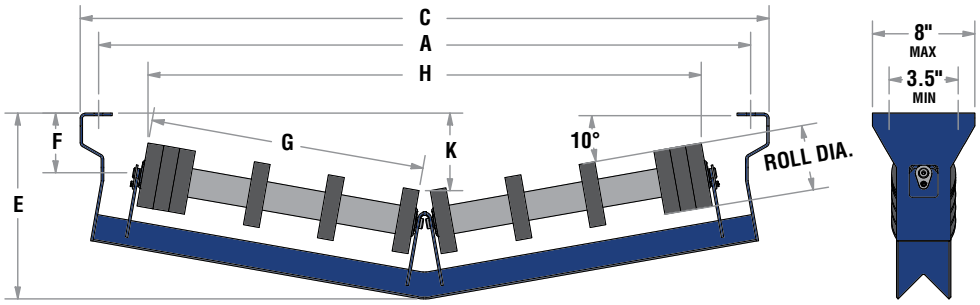

Rubber Disc V-Returns (F = 4.5")

Belt Width	5" Roll Diameter						6" Roll Diameter					
	Part Number	E	H	K	Wt.	Replacement Roll	Part Number	E	H	K	Wt.	Replacement Roll
24	C5-10VRD4-24	12.94	26.75	4.50	44	C5-VRD-24	C6-10VRD4-24	12.94	26.56	4.00	48	C6-VRD-24
30	C5-10VRD4-30	13.44	35.31	5.00	51	C5-VRD-30	C6-10VRD4-30	13.44	35.19	4.50	56	C6-VRD-30
36	C5-10VRD4-36	14.00	39.50	5.56	54	C5-VRD-36	C6-10VRD4-36	14.00	39.38	5.00	59	C6-VRD-36
42	C5-10VRD4-42	14.50	43.50	6.00	59	C5-VRD-42	C6-10VRD4-42	14.50	43.31	5.38	65	C6-VRD-42
48	C5-10VRD4-48	15.00	51.81	6.63	64	C5-VRD-48	C6-10VRD4-48	15.00	51.69	6.13	72	C6-VRD-48
54	C5-10VRD4-54	15.56	57.50	7.13	69	C5-VRD-54	C6-10VRD4-54	15.56	57.31	6.63	77	C6-VRD-54
60	C5-10VRD4-60	16.13	63.44	7.69	75	C5-VRD-60	C6-10VRD4-60	16.13	63.25	7.19	82	C6-VRD-60

Rubber Disc V-Returns (F =7")

Belt Width	5" Roll Diameter						6" Roll Diameter					
	Part Number	E	H	K	Wt.	Replacement Roll	Part Number	E	H	K	Wt.	Replacement Roll
24	C5-10VRD7-24	15.56	26.75	7.13	46	C5-VRD-24	C6-10VRD7-24	15.56	26.56	6.63	50	C6-VRD-24
30	C5-10VRD7-30	16.06	35.31	7.63	53	C5-VRD-30	C6-10VRD7-30	16.06	35.19	7.13	58	C6-VRD-30
36	C5-10VRD7-36	16.63	39.50	8.19	56	C5-VRD-36	C6-10VRD7-36	16.63	39.38	7.69	61	C6-VRD-36
42	C5-10VRD7-42	17.13	43.50	8.69	61	C5-VRD-42	C6-10VRD7-42	17.13	43.31	8.25	67	C6-VRD-42
48	C5-10VRD7-48	17.69	51.81	9.25	66	C5-VRD-48	C6-10VRD7-48	17.69	51.69	8.75	74	C6-VRD-48
54	C5-10VRD7-54	18.19	57.50	9.75	71	C5-VRD-54	C6-10VRD7-54	18.19	57.31	9.25	79	C6-VRD-54
60	C5-10VRD7-60	18.75	63.44	10.25	77	C5-VRD-60	C6-10VRD7-60	18.75	63.25	9.81	84	C6-VRD-60

CEMA C
Steel Flat Carry

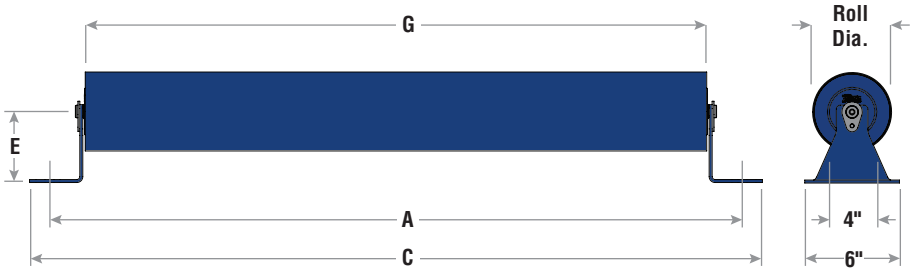

Belt Width	Standard Dimensions		
	A	C	G
18	27	28.44	21.38
20	29	30.44	23.38
24	33	34.44	27.38
30	39	40.44	33.38
36	45	46.44	39.38
42	51	52.44	45.38
48	57	58.44	51.38
54	63	64.44	57.38
60	69	70.44	63.38

Steel Flat Carry (E = 1.5")

Belt Width	4" Roll Diameter			5" Roll Diameter			6" Roll Diameter		
	Part Number	Wt.	Replacement Roll	Part Number	Wt.	Replacement Roll	Part Number	Wt.	Replacement Roll
18	C4-F-18-1	18	C4-R-18	C5-F-18-09-1	22	C5-R-18-09	C6-F-18-09-1	25	C6-R-18-09
20	C4-F-20-1	20	C4-R-20	C5-F-20-09-1	24	C5-R-20-09	C6-F-20-09-1	27	C6-R-20-09
24	C4-F-24-1	23	C4-R-24	C5-F-24-09-1	27	C5-R-24-09	C6-F-24-09-1	31	C6-R-24-09
30	C4-F-30-1	27	C4-R-30	C5-F-30-09-1	32	C5-R-30-09	C6-F-30-09-1	37	C6-R-30-09
36	C4-F-36-1	31	C4-R-36	C5-F-36-09-1	36	C5-R-36-09	C6-F-36-09-1	42	C6-R-36-09
42	C4-F-42-1	35	C4-R-42	C5-F-42-09-1	41	C5-R-42-09	C6-F-42-09-1	48	C6-R-42-09
48	C4-F-48-1	39	C4-R-48	C5-F-48-09-1	46	C5-R-48-09	C6-F-48-09-1	54	C6-R-48-09
*54	C4-F-54-1	43	C4-R-54	C5-F-54-09-1	51	C5-R-54-09	C6-F-54-09-1	59	C6-R-54-09
*60	C4-F-60-1	47	C4-R-60	C5-F-60-09-1	56	C5-R-60-09	C6-F-60-09-1	65	C6-R-60-09

Steel Flat Carry (E = 4.5")

Belt Width	4" Roll Diameter			5" Roll Diameter			6" Roll Diameter		
	Part Number	Wt.	Replacement Roll	Part Number	Wt.	Replacement Roll	Part Number	Wt.	Replacement Roll
18	C4-F-18-4	20	C4-R-18	C5-F-18-09-4	23	C5-R-18-09	C6-F-18-09-4	26	C6-R-18-09
20	C4-F-20-4	21	C4-R-20	C5-F-20-09-4	25	C5-R-20-09	C6-F-20-09-4	28	C6-R-20-09
24	C4-F-24-4	24	C4-R-24	C5-F-24-09-4	28	C5-R-24-09	C6-F-24-09-4	32	C6-R-24-09
30	C4-F-30-4	28	C4-R-30	C5-F-30-09-4	33	C5-R-30-09	C6-F-30-09-4	38	C6-R-30-09
36	C4-F-36-4	32	C4-R-36	C5-F-36-09-4	37	C5-R-36-09	C6-F-36-09-4	43	C6-R-36-09
42	C4-F-42-4	36	C4-R-42	C5-F-42-09-4	42	C5-R-42-09	C6-F-42-09-4	49	C6-R-42-09
48	C4-F-48-4	40	C4-R-48	C5-F-48-09-4	47	C5-R-48-09	C6-F-48-09-4	55	C6-R-48-09
*54	C4-F-54-4	44	C4-R-54	C5-F-54-09-4	52	C5-R-54-09	C6-F-54-09-4	60	C6-R-54-09
*60	C4-F-60-4	48	C4-R-60	C5-F-60-09-4	57	C5-R-60-09	C6-F-60-09-4	66	C6-R-60-09

*CEMA recommends class D.

Note: Brackets Also Sold Separately (page N-65).

CEMA C
Impact Flat Carry

Belt Width	Standard Dimensions		
	A	C	G
18	27	28.44	21.38
20	29	30.44	23.38
24	33	34.44	27.38
30	39	40.44	33.38
36	45	46.44	39.38
42	51	52.44	45.38
48	57	58.44	51.38
54	63	64.44	57.38
60	69	70.44	63.38

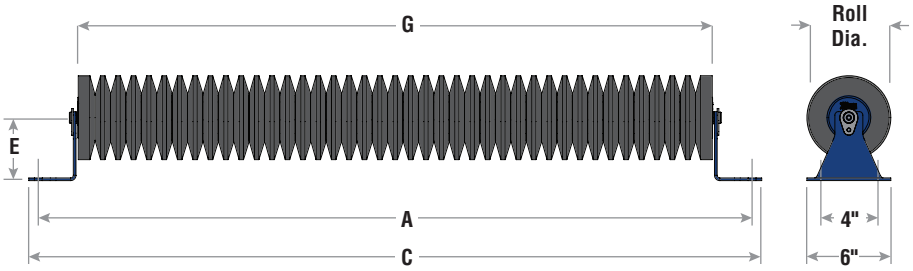

Impact Flat Carry (E = 1.5")

Belt Width	5" Roll Diameter			6" Roll Diameter		
	Part Number	Wt.	Replacement Roll	Part Number	Wt.	Replacement Roll
18	C5-FRD-18-1	24	C5-FRD-18	C6-FRD-18-1	28	C6-FRD-18
20	C5-FRD-20-1	26	C5-FRD-20	C6-FRD-20-1	30	C6-FRD-20
24	C5-FRD-24-1	30	C5-FRD-24	C6-FRD-24-1	35	C6-FRD-24
30	C5-FRD-30-1	36	C5-FRD-30	C6-FRD-30-1	42	C6-FRD-30
36	C5-FRD-36-1	42	C5-FRD-36	C6-FRD-36-1	49	C6-FRD-36
42	C5-FRD-42-1	48	C5-FRD-42	C6-FRD-42-1	56	C6-FRD-42
48	C5-FRD-48-1	54	C5-FRD-48	C6-FRD-48-1	63	C6-FRD-48
*54	C5-FRD-54-1	60	C5-FRD-54	C6-FRD-54-1	70	C6-FRD-54
*60	C5-FRD-60-1	67	C5-FRD-60	C6-FRD-60-1	77	C6-FRD-60

Impact Flat Carry (E = 4.5")

Belt Width	5" Roll Diameter			6" Roll Diameter		
	Part Number	Wt.	Replacement Roll	Part Number	Wt.	Replacement Roll
18	C5-FRD-18-4	25	C5-FRD-18	C6-FRD-18-4	29	C6-FRD-18
20	C5-FRD-20-4	27	C5-FRD-20	C6-FRD-20-4	31	C6-FRD-20
24	C5-FRD-24-4	31	C5-FRD-24	C6-FRD-24-4	36	C6-FRD-24
30	C5-FRD-30-4	37	C5-FRD-30	C6-FRD-30-4	43	C6-FRD-30
36	C5-FRD-36-4	43	C5-FRD-36	C6-FRD-36-4	50	C6-FRD-36
42	C5-FRD-42-4	49	C5-FRD-42	C6-FRD-42-4	57	C6-FRD-42
48	C5-FRD-48-4	55	C5-FRD-48	C6-FRD-48-4	64	C6-FRD-48
*54	C5-FRD-54-4	61	C5-FRD-54	C6-FRD-54-4	71	C6-FRD-54
*60	C5-FRD-60-4	68	C5-FRD-60	C6-FRD-60-4	78	C6-FRD-60

*CEMA recommends class D.

Note: Brackets Also Sold Separately (page N-65).

CEMA C
Steel Channel Inset Idlers

Belt Width	Standard Dimensions		
	C	G	GW
18	23.63	6.75	5.44
24	29.63	8.94	7.63
30	35.63	11.13	8.94
36	41.63	13.25	11.13
42	47.63	15.44	13.25
48	53.63	17.63	15.44
54	59.63	19.75	17.63
60	65.63	21.75	19.75

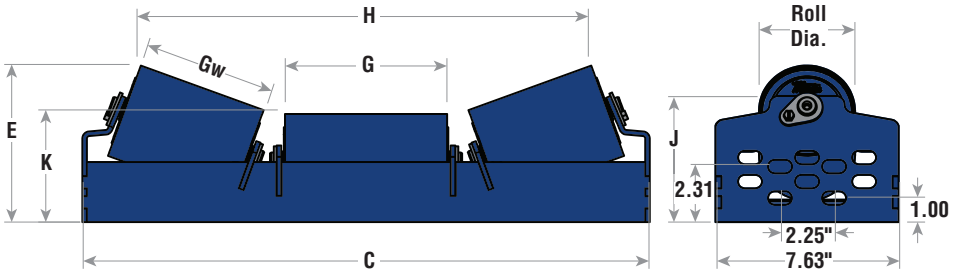

20º Steel Channel Inset Idlers

Belt Width	4" Roll Diameter								5" Roll Diameter							
	Part Number	E	H	K	J	Wt.	Replacement Roll		Part Number	E	H	K	J	Wt.	Replacement Roll	
							Center Roll	Wing Roll							Center Roll	Wing Roll
18	C4-20CT-18	6.50	18.51	4.5	5.23	30.04	C4-T-18	C4-T-14	C5-20CT-18-09	6.97	18.17	5	5.23	33.53	C5-T-18-09	C5-T-14-09
24	C4-20CT-24	7.24	24.81		5.98	36.04	C4-T-24	C4-T-20	C5-20CT-24-09	7.71	24.47		5.98	40.39	C5-T-24-09	C5-T-20-09
30	C4-20CT-30	7.69	29.46		6.43	41.53	C4-T-30	C4-T-24	C5-20CT-30-09	8.16	29.12		6.43	46.51	C5-T-30-09	C5-T-24-09
36	C4-20CT-36	8.44	35.70		7.17	47.99	C4-T-36	C4-T-30	C5-20CT-36-09	8.91	35.36		7.17	53.81	C5-T-36-09	C5-T-30-09
42	C4-20CT-42	9.17	41.88		7.90	54.40	C4-T-42	C4-T-36	C5-20CT-42-09	9.64	41.54		7.9	61.05	C5-T-42-09	C5-T-36-09
48	C4-20CT-48	9.92	48.18		8.65	60.88	C4-T-48	C4-T-42	C5-20CT-48-09	10.39	47.84		8.65	68.39	C5-T-48-09	C5-T-42-09
54	C4-20CT-54	10.66	54.42		9.40	67.33	C4-T-54	C4-T-48	C5-20CT-54-09	11.13	54.07		9.4	75.69	C5-T-54-09	C5-T-48-09
60	C4-20CT-60	11.39	60.41		10.12	73.67	C4-T-60	C4-T-54	C5-20CT-60-09	11.86	60.07		10.12	82.84	C5-T-60-09	C5-T-54-09

Belt Width	Standard Dimensions		
	C	G	GW
18	23.63	6.75	5.44
24	29.63	8.94	7.63
30	35.63	11.13	8.94
36	41.63	13.25	11.13
42	47.63	15.44	13.25
48	53.63	17.63	15.44
54	59.63	19.75	17.63
60	65.63	21.75	19.75

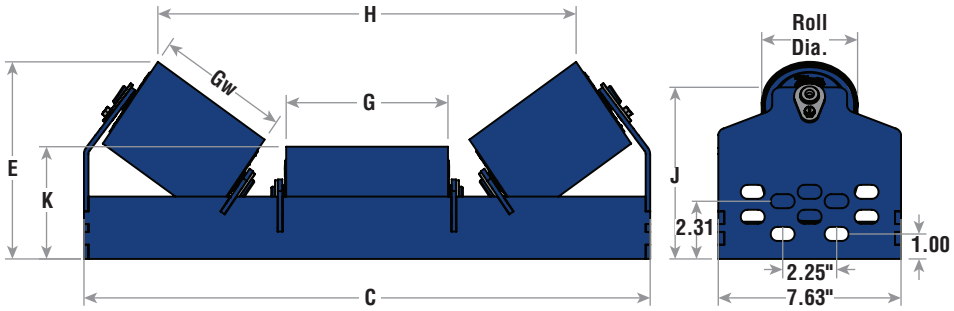

35º Steel Channel Inset Idlers

Belt Width	4" Roll Diameter								5" Roll Diameter							
	Part Number	E	H	K	J	Wt.	Replacement Roll		Part Number	E	H	K	J	Wt.	Replacement Roll	
							Center Roll	Wing Roll							Center Roll	Wing Roll
18	C4-35CT-18	7.81	17.41	4.5	6.89	31.67	C4-T-18	C4-T-14	C5-35CT-18-09	8.19	16.88	5	6.89	35.16	C5-T-18-09	C5-T-14-09
24	C4-35CT-24	9.61	23.18		8.14	38.87	C4-T-24	C4-T-20	C5-35CT-24-09	9.44	22.66		8.14	43.22	C5-T-24-09	C5-T-20-09
30	C4-35CT-30	9.82	27.52		8.89	44.69	C4-T-30	C4-T-24	C5-35CT-30-09	10.19	26.99		8.89	49.66	C5-T-30-09	C5-T-24-09
36	C4-35CT-36	11.08	33.23		10.15	51.86	C4-T-36	C4-T-30	C5-35CT-36-09	11.45	32.70		10.15	57.68	C5-T-36-09	C5-T-30-09
42	C4-35CT-42	12.30	38.90		11.37	58.96	C4-T-42	C4-T-36	C5-35CT-42-09	12.67	38.37		11.37	65.62	C5-T-42-09	C5-T-36-09
48	C4-35CT-48	13.55	44.67		12.62	66.16	C4-T-48	C4-T-42	C5-35CT-48-09	13.92	44.14		12.62	73.67	C5-T-48-09	C5-T-42-09
54	C4-35CT-54	14.80	50.38		13.88	73.33	C4-T-54	C4-T-48	C5-35CT-54-09	15.18	49.85		13.88	81.68	C5-T-54-09	C5-T-48-09
60	C4-35CT-60	16.02	55.86		15.09	80.33	C4-T-60	C4-T-54	C5-35CT-60-09	16.40	55.33		15.09	89.50	C5-T-60-09	C5-T-54-09

CEMA C
Impact Channel Inset Idlers

Belt Width	Standard Dimensions		
	C	G	GW
18	23.63	6.75	5.44
24	29.63	8.94	7.63
30	35.63	11.13	8.94
36	41.63	13.25	11.13
42	47.63	15.44	13.25
48	53.63	17.63	15.44
54	59.63	19.75	17.63
60	65.63	21.75	19.75

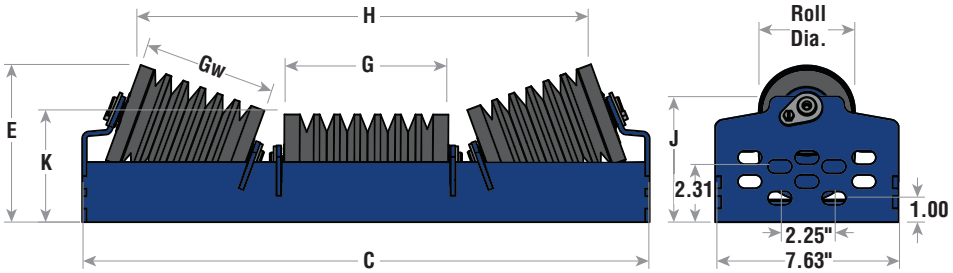

20º Impact Channel Inset Idlers

Belt Width	4" Roll Diameter								5" Roll Diameter							
	Part Number	E	H	K	J	Wt.	Replacement Roll		Part Number	E	H	K	J	Wt.	Replacement Roll	
							Center Roll	Wing Roll							Center Roll	Wing Roll
18	C4-20CTI-18	6.50	18.51	4.5	5.23	39.89	C4-TI-18	C4-TI-14	C5-20CTI-18	6.97	18.17	5	5.23	40.86	C5-TI-18	C5-TI-14
24	C4-20CTI-24	7.24	24.81		5.98	48.13	C4-TI-24	C4-TI-20	C5-20CTI-24	7.71	24.47		5.98	51.85	C5-TI-24	C5-TI-20
30	C4-20CTI-30	7.69	29.46		6.43	56.41	C4-TI-30	C4-TI-24	C5-20CTI-30	8.16	29.12		6.43	61.21	C5-TI-30	C5-TI-24
36	C4-20CTI-36	8.44	35.70		7.17	66.62	C4-TI-36	C4-TI-30	C5-20CTI-36	8.91	35.36		7.17	71.74	C5-TI-36	C5-TI-30
42	C4-20CTI-42	9.17	41.88		7.90	76.47	C4-TI-42	C4-TI-36	C5-20CTI-42	9.64	41.54		7.90	82.88	C5-TI-42	C5-TI-36
48	C4-20CTI-48	9.92	48.18		8.65	86.48	C4-TI-48	C4-TI-42	C5-20CTI-48	10.39	47.84		8.65	93.69	C5-TI-48	C5-TI-42
54	C4-20CTI-54	10.66	54.42		9.40	96.41	C4-TI-54	C4-TI-48	C5-20CTI-54	11.13	54.07		9.40	104.93	C5-TI-54	C5-TI-48
60	C4-20CTI-60	11.39	60.41		10.12	106.08	C4-TI-60	C4-TI-54	C5-20CTI-60	11.86	60.07		10.12	115.36	C5-TI-60	C5-TI-54

Belt Width	Standard Dimensions		
	C	G	GW
18	23.63	6.75	5.44
24	29.63	8.94	7.63
30	35.63	11.13	8.94
36	41.63	13.25	11.13
42	47.63	15.44	13.25
48	53.63	17.63	15.44
54	59.63	19.75	17.63
60	65.63	21.75	19.75

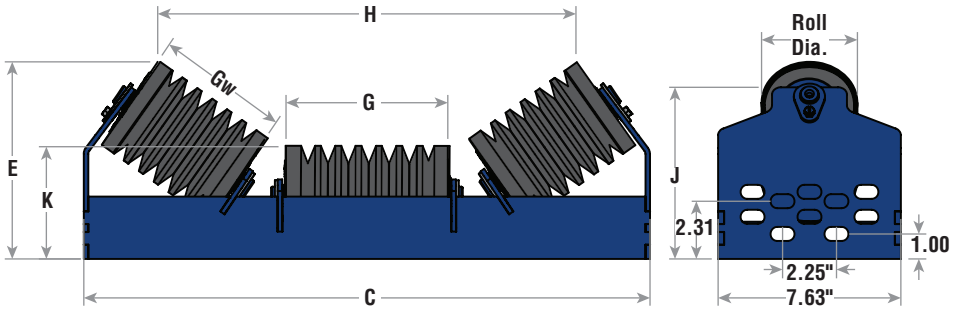

35º Impact Channel Inset Idlers

Belt Width	4" Roll Diameter								5" Roll Diameter							
	Part Number	E	H	K	J	Wt.	Replacement Roll		Part Number	E	H	K	J	Wt.	Replacement Roll	
							Center Roll	Wing Roll							Center Roll	Wing Roll
18	C4-35CTI-18	7.81	17.41	4.5	6.89	43.15	C4-TI-18	C4-TI-14	C5-35CTI-18	8.19	16.88	5	6.89	44.12	C5-TI-18	C5-TI-14
24	C4-35CTI-24	9.61	23.18		8.14	53.79	C4-TI-24	C4-TI-20	C5-35CTI-24	9.44	22.66		8.14	57.51	C5-TI-24	C5-TI-20
30	C4-35CTI-30	9.82	27.52		8.89	62.73	C4-TI-30	C4-TI-24	C5-35CTI-30	10.19	26.99		8.89	67.51	C5-TI-30	C5-TI-24
36	C4-35CTI-36	11.08	33.23		10.15	74.36	C4-TI-36	C4-TI-30	C5-35CTI-36	11.45	32.70		10.15	79.48	C5-TI-36	C5-TI-30
42	C4-35CTI-42	12.30	38.90		11.37	85.59	C4-TI-42	C4-TI-36	C5-35CTI-42	12.67	38.37		11.37	92.02	C5-TI-42	C5-TI-36
48	C4-35CTI-48	13.55	44.67		12.62	97.04	C4-TI-48	C4-TI-42	C5-35CTI-48	13.92	44.14		12.62	104.25	C5-TI-48	C5-TI-42
54	C4-35CTI-54	14.80	50.38		13.88	108.41	C4-TI-54	C4-TI-48	C5-35CTI-54	15.18	49.85		13.88	116.91	C5-TI-54	C5-TI-48
60	C4-35CTI-60	16.02	55.86		15.09	119.40	C4-TI-60	C4-TI-54	C5-35CTI-60	16.40	55.33		15.09	128.68	C5-TI-60	C5-TI-54

CEMA C
Equal Steel Idler Self-Aligners

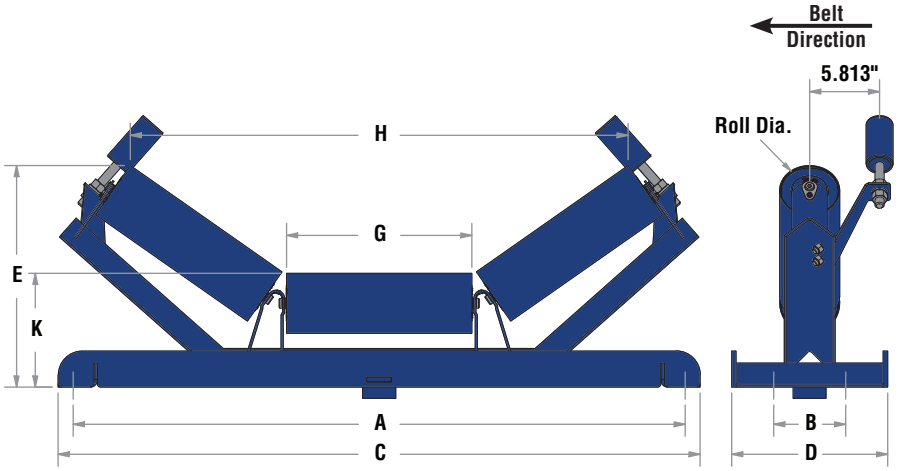

Belt Width	Standard Dimensions					Wide Base	
	A	B	C	D	G	Aw*	Cw*
18	27	3.69	29.5	13	6.75	33	31.5
20	29	3.69	31.5	13	7.63	35	35.5
24	33	3.69	35.5	13	8.94	39	41.5
30	39	3.69	41.5	13	11.13	45	47.5
36	45	3.69	47.5	13	13.25	51	53.5
42	51	3.69	53.5	13	15.44	57	59.5
48	57	3.69	59.5	13	17.63	63	65.5
54	63	3.69	65.5	13	19.75	69	71.5
60	69	3.69	71.5	13	21.75	75	77.5

*Dimension not shown; for wide base.

20º Equal Steel Idler Self-Aligners

Belt Width	4" Roll Diameter						5" Roll Diameter					
	Part Number	E	H	K	Wt.	Replacement Roll	Part Number	E	H	K	Wt.	Replacement Roll
18	C4-20TSA-18	11.44	21.00	9	82	C4-T-18	C5-20TSA-18-09	11.94	20.63	9.5	87	C5-T-18-09
20	C4-20TSA-20	11.75	23.50	9	87	C4-T-20	C5-20TSA-20-09	12.25	23.13	9.5	92	C5-T-20-09
24	C4-20TSA-24	12.19	27.25	9	93	C4-T-24	C5-20TSA-24-09	12.69	26.94	9.5	99	C5-T-24-09
30	C4-20TSA-30	12.94	33.56	9	104	C4-T-30	C5-20TSA-30-09	13.44	33.25	9.5	111	C5-T-30-09
36	C4-20TSA-36	13.69	39.69	9	114	C4-T-36	C5-20TSA-36-09	14.13	39.31	9.5	122	C5-T-36-09
42	C4-20TSA-42	14.44	46.00	9	125	C4-T-42	C5-20TSA-42-09	14.88	45.63	9.5	134	C5-T-42-09
48	C4-20TSA-48	15.19	52.25	9	136	C4-T-48	C5-20TSA-48-09	15.63	51.94	9.5	146	C5-T-48-09
54	C4-20TSA-54	15.88	58.38	9	146	C4-T-54	C5-20TSA-54-09	16.38	58.06	9.5	157	C5-T-54-09
60	C4-20TSA-60	16.56	64.13	9	157	C4-T-60	C5-20TSA-60-09	17.06	63.81	9.5	168	C5-T-60-09

Belt Width	6" Roll Diameter					
	Part Number	E	H	K	Wt.	Replacement Roll
18	C6-20TSA-18-09	12.38	20.25	10	91	C6-T-18-09
20	C6-20TSA-20-09	12.69	22.81	10	96	C6-T-20-09
24	C6-20TSA-24-09	13.13	26.56	10	104	C6-T-24-09
30	C6-20TSA-30-09	13.88	32.88	10	116	C6-T-30-09
36	C6-20TSA-36-09	14.63	39.00	10	129	C6-T-36-09
42	C6-20TSA-42-09	15.38	45.31	10	141	C6-T-42-09
48	C6-20TSA-48-09	16.13	51.56	10	154	C6-T-48-09
54	C6-20TSA-54-09	16.81	57.69	10	166	C6-T-54-09
60	C6-20TSA-60-09	17.50	63.44	10	178	C6-T-60-09

Shoe-Type Self-Aligner Available

CEMA C
Equal Steel Idler Self-Aligners

35º Equal Steel Idler Self-Aligners

Belt Width	4" Roll Diameter						5" Roll Diameter					
	Part Number	E	H	K	Wt.	Replacement Roll	Part Number	E	H	K	Wt.	Replacement Roll
18	C4-35TSA-18	13.06	19.13	9	84	C4-T-18	C5-35TSA-18-09	13.44	18.56	9.5	89	C5-T-18-09
20	C4-35TSA-20	13.56	21.44	9	89	C4-T-20	C5-35TSA-20-09	13.94	20.88	9.5	94	C5-T-20-09
24	C4-35TSA-24	14.31	24.94	9	95	C4-T-24	C5-35TSA-24-09	14.69	24.31	9.5	101	C5-T-24-09
30	C4-35TSA-30	15.56	30.69	9	106	C4-T-30	C5-35TSA-30-09	16.00	30.13	9.5	113	C5-T-30-09
36	C4-35TSA-36	16.81	36.31	9	117	C4-T-36	C5-35TSA-36-09	17.19	35.69	9.5	124	C5-T-36-09
42	C4-35TSA-42	18.06	42.06	9	127	C4-T-42	C5-35TSA-42-09	18.44	41.50	9.5	136	C5-T-42-09
48	C4-35TSA-48	19.31	47.81	9	138	C4-T-48	C5-35TSA-48-09	19.69	47.25	9.5	148	C5-T-48-09
54	C4-35TSA-54	20.50	53.44	9	148	C4-T-54	C5-35TSA-54-09	20.98	52.88	9.5	159	C5-T-54-09
60	C4-35TSA-60	21.69	58.69	9	158	C4-T-60	C5-35TSA-60-09	22.06	58.13	9.5	170	C5-T-60-09

Belt Width	6" Roll Diameter					
	Part Number	E	H	K	Wt.	Replacement Roll
18	C6-35TSA-18-09	13.88	18.00	10	93	C6-T-18-09
20	C6-35TSA-20-09	14.38	20.31	10	98	C6-T-20-09
24	C6-35TSA-24-09	15.13	23.75	10	106	C6-T-24-09
30	C6-35TSA-30-09	16.38	29.50	10	119	C6-T-30-09
36	C6-35TSA-36-09	17.63	35.13	10	131	C6-T-36-09
42	C6-35TSA-42-09	18.88	40.94	10	144	C6-T-42-09
48	C6-35TSA-48-09	20.13	46.69	10	156	C6-T-48-09
54	C6-35TSA-54-09	21.31	52.31	10	168	C6-T-54-09
60	C6-35TSA-60-09	22.50	57.56	10	180	C6-T-60-09

45º Equal Steel Idler Self-Aligners

Belt Width	4" Roll Diameter						5" Roll Diameter					
	Part Number	E	H	K	Wt.	Replacement Roll	Part Number	E	H	K	Wt.	Replacement Roll
18	C4-45TSA-18	14.13	17.94	9	86	C4-T-18	C5-45TSA-18-09	14.44	17.25	9.5	91	C5-T-18-09
20	C4-45TSA-20	14.69	20.06	9	90	C4-T-20	C5-45TSA-20-09	15.06	19.31	9.5	95	C5-T-20-09
24	C4-45TSA-24	15.63	23.25	9	97	C4-T-24	C5-45TSA-24-09	16.00	22.50	9.5	102	C5-T-24-09
30	C4-45TSA-30	17.19	28.50	9	108	C4-T-30	C5-45TSA-30-09	17.56	27.75	9.5	114	C5-T-30-09
36	C4-45TSA-36	18.69	33.63	9	118	C4-T-36	C5-45TSA-36-09	19.06	32.94	9.5	126	C5-T-36-09
42	C4-45TSA-42	20.25	38.94	9	129	C4-T-42	C5-45TSA-42-09	20.63	38.25	9.5	137	C5-T-42-09
48	C4-45TSA-48	21.75	44.19	9	139	C4-T-48	C5-45TSA-48-09	22.13	43.50	9.5	149	C5-T-48-09
54	C4-45TSA-54	23.25	49.31	9	150	C4-T-54	C5-45TSA-54-09	23.63	48.63	9.5	161	C5-T-54-09
60	C4-45TSA-60	24.69	54.13	9	160	C4-T-60	C5-45TSA-60-09	25.06	53.38	9.5	172	C5-T-60-09

Belt Width	6" Roll Diameter					
	Part Number	E	H	K	Wt.	Replacement Roll
18	C6-45TSA-18-09	14.81	16.50	10	95	C6-T-18-09
20	C6-45TSA-20-09	15.44	18.63	10	99	C6-T-20-09
24	C6-45TSA-24-09	16.31	21.81	10	107	C6-T-24-09
30	C6-45TSA-30-09	17.88	27.06	10	120	C6-T-30-09
36	C6-45TSA-36-09	19.38	32.25	10	133	C6-T-36-09
42	C6-45TSA-42-09	20.94	37.50	10	145	C6-T-42-09
48	C6-45TSA-48-09	22.50	42.75	10	158	C6-T-48-09
54	C6-45TSA-54-09	24.00	47.94	10	170	C6-T-54-09
60	C6-45TSA-60-09	25.44	52.75	10	182	C6-T-60-09

Shoe-Type Self-Aligner Available

CEMA C
Steel Return Self-Aligners

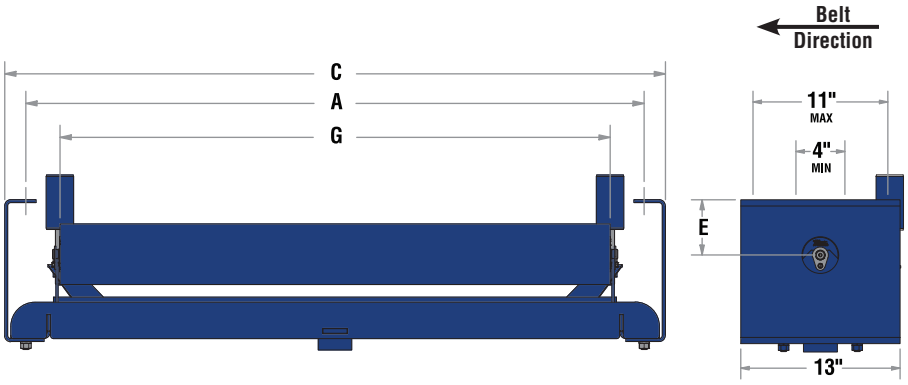

Belt Width	Standard Dimensions			Wide Base	
	A	C	G	Aw*	Cw*
18	27	30.5	21.38	33	32.5
20	29	32.5	23.38	35	36.5
24	33	36.5	27.38	39	42.5
30	39	42.5	33.38	45	48.5
36	45	48.5	39.38	51	54.5
42	51	54.5	45.38	57	60.5
48	57	60.5	51.38	63	66.5
54	63	66.5	57.38	69	72.5
60	69	72.5	63.38	75	78.5

*Dimension not shown; for wide base.

Steel Return Self-Aligners (E = 1.5")

Belt Width	4" Roll Diameter			5" Roll Diameter			6" Roll Diameter		
	Part Number	Wt.	Replacement Roll	Part Number	Wt.	Replacement Roll	Part Number	Wt.	Replacement Roll
18	C4-RSA1-18	98	C4-R-18	C5-RSA1-18-09	103	C5-R-18-09	C6-RSA1-18-09	107	C6-R-18-09
20	C4-RSA1-20	101	C4-R-20	C5-RSA1-20-09	107	C5-R-20-09	C6-RSA1-20-09	111	C6-R-20-09
24	C4-RSA1-24	108	C4-R-24	C5-RSA1-24-09	114	C5-R-24-09	C6-RSA1-24-09	118	C6-R-24-09
30	C4-RSA1-30	118	C4-R-30	C5-RSA1-30-09	126	C5-R-30-09	C6-RSA1-30-09	131	C6-R-30-09
36	C4-RSA1-36	127	C4-R-36	C5-RSA1-36-09	137	C5-R-36-09	C6-RSA1-36-09	142	C6-R-36-09
42	C4-RSA1-42	137	C4-R-42	C5-RSA1-42-09	148	C5-R-42-09	C6-RSA1-42-09	154	C6-R-42-09
48	C4-RSA1-48	147	C4-R-48	C5-RSA1-48-09	159	C5-R-48-09	C6-RSA1-48-09	166	C6-R-48-09
*54	C4-RSA1-54	157	C4-R-54	C5-RSA1-54-09	170	C5-R-54-09	C6-RSA1-54-09	178	C6-R-54-09
*60	C4-RSA1-60	167	C4-R-60	C5-RSA1-60-09	181	C5-R-60-09	C6-RSA1-60-09	190	C6-R-60-09

Steel Return Self-Aligners (E = 4.5")

Belt Width	4" Roll Diameter			5" Roll Diameter			6" Roll Diameter		
	Part Number	Wt.	Replacement Roll	Part Number	Wt.	Replacement Roll	Part Number	Wt.	Replacement Roll
18	C4-RSA4-18	103	C4-R-18	C5-RSA4-18-09	108	C5-R-18-09	C6-RSA4-18-09	111	C6-R-18-09
20	C4-RSA4-20	106	C4-R-20	C5-RSA4-20-09	112	C5-R-20-09	C6-RSA4-20-09	115	C6-R-20-09
24	C4-RSA4-24	112	C4-R-24	C5-RSA4-24-09	119	C5-R-24-09	C6-RSA4-24-09	123	C6-R-24-09
30	C4-RSA4-30	122	C4-R-30	C5-RSA4-30-09	130	C5-R-30-09	C6-RSA4-30-09	135	C6-R-30-09
36	C4-RSA4-36	132	C4-R-36	C5-RSA4-36-09	142	C5-R-36-09	C6-RSA4-36-09	147	C6-R-36-09
42	C4-RSA4-42	142	C4-R-42	C5-RSA4-42-09	153	C5-R-42-09	C6-RSA4-42-09	159	C6-R-42-09
48	C4-RSA4-48	152	C4-R-48	C5-RSA4-48-09	164	C5-R-48-09	C6-RSA4-48-09	171	C6-R-48-09
*54	C4-RSA4-54	162	C4-R-54	C5-RSA4-54-09	175	C5-R-54-09	C6-RSA4-54-09	183	C6-R-54-09
*60	C4-RSA4-60	172	C4-R-60	C5-RSA4-60-09	186	C5-R-60-09	C6-RSA4-60-09	195	C6-R-60-09

*CEMA recommends Class D

Shoe-Type Self-Aligner Available

CEMA C
Rubber Disc Return Self-Aligners

Belt Width	Standard Dimensions			Wide Base	
	A	C	G	Aw*	Cw*
18	27	30.5	21.13	33	36.5
20	29	32.5	23.13	35	38.5
24	33	36.5	27.13	39	42.5
30	39	42.5	33.13	45	48.5
36	45	48.5	39.13	51	54.5
42	51	54.5	45.13	57	60.5
48	57	60.5	51.13	63	66.5
54	63	66.5	57.13	69	72.5
60	69	72.5	63.13	75	78.5

*Dimension not shown; for wide base.

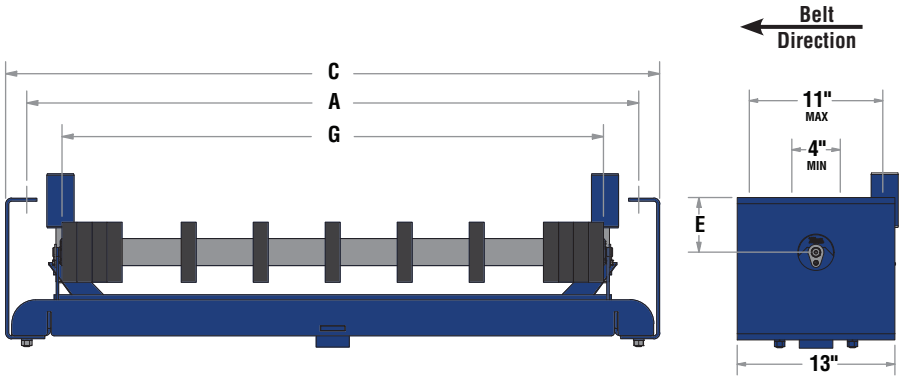

Rubber Disc Return Self-Aligners (E = 1.5")

Belt Width	4" Roll Diameter			5" Roll Diameter			6" Roll Diameter		
	Part Number	Wt.	Replacement Roll	Part Number	Wt.	Replacement Roll	Part Number	Wt.	Replacement Roll
18	C4-RRDSA1-18	100	C4-RRD-18	C5-RRDSA1-18	103	C5-RRD-18	C6-RRDSA1-18	106	C6-RRD-18
20	C4-RRDSA1-20	104	C4-RRD-20	C5-RRDSA1-20	106	C5-RRD-20	C6-RRDSA1-20	110	C6-RRD-20
24	C4-RRDSA1-24	111	C4-RRD-24	C5-RRDSA1-24	114	C5-RRD-24	C6-RRDSA1-24	117	C6-RRD-24
30	C4-RRDSA1-30	121	C4-RRD-30	C5-RRDSA1-30	124	C5-RRD-30	C6-RRDSA1-30	128	C6-RRD-30
36	C4-RRDSA1-36	131	C4-RRD-36	C5-RRDSA1-36	135	C5-RRD-36	C6-RRDSA1-36	139	C6-RRD-36
42	C4-RRDSA1-42	142	C4-RRD-42	C5-RRDSA1-42	146	C5-RRD-42	C6-RRDSA1-42	150	C6-RRD-42
48	C4-RRDSA1-48	152	C4-RRD-48	C5-RRDSA1-48	156	C5-RRD-48	C6-RRDSA1-48	161	C6-RRD-48
*54	C4-RRDSA1-54	162	C4-RRD-54	C5-RRDSA1-54	167	C5-RRD-54	C6-RRDSA1-54	172	C6-RRD-54
*60	C4-RRDSA1-60	173	C4-RRD-60	C5-RRDSA1-60	177	C5-RRD-60	C6-RRDSA1-60	183	C6-RRD-60

Rubber Disc Return Self-Aligners (E = 4.5")

Belt Width	4" Roll Diameter			5" Roll Diameter			6" Roll Diameter		
	Part Number	Wt.	Replacement Roll	Part Number	Wt.	Replacement Roll	Part Number	Wt.	Replacement Roll
18	C4-RRDSA4-18	105	C4-RRD-18	C5-RRDSA4-18	108	C5-RRD-18	C6-RRDSA4-18	111	C6-RRD-18
20	C4-RRDSA4-20	108	C4-RRD-20	C5-RRDSA4-20	111	C5-RRD-20	C6-RRDSA4-20	114	C6-RRD-20
24	C4-RRDSA4-24	115	C4-RRD-24	C5-RRDSA4-24	118	C5-RRD-24	C6-RRDSA4-24	122	C6-RRD-24
30	C4-RRDSA4-30	126	C4-RRD-30	C5-RRDSA4-30	129	C5-RRD-30	C6-RRDSA4-30	133	C6-RRD-30
36	C4-RRDSA4-36	136	C4-RRD-36	C5-RRDSA4-36	140	C5-RRD-36	C6-RRDSA4-36	144	C6-RRD-36
42	C4-RRDSA4-42	146	C4-RRD-42	C5-RRDSA4-42	150	C5-RRD-42	C6-RRDSA4-42	155	C6-RRD-42
48	C4-RRDSA4-48	157	C4-RRD-48	C5-RRDSA4-48	161	C5-RRD-48	C6-RRDSA4-48	166	C6-RRD-48
*54	C4-RRDSA4-54	167	C4-RRD-54	C5-RRDSA4-54	172	C5-RRD-54	C6-RRDSA4-54	177	C6-RRD-54
*60	C4-RRDSA4-60	177	C4-RRD-60	C5-RRDSA4-60	182	C5-RRD-60	C6-RRDSA4-60	188	C6-RRD-60

*CEMA recommends Class D

Shoe-Type Self-Aligner Available

CEMA C
Flat Carry Self-Aligners

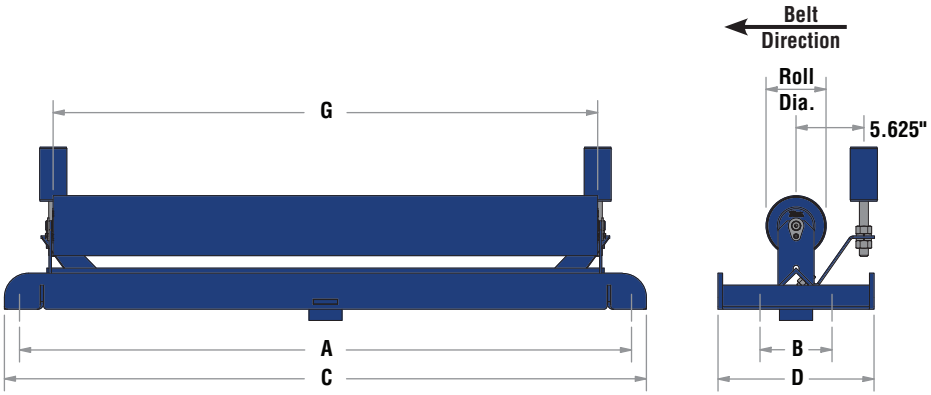

Belt Width	Standard Dimensions					Wide Base	
	A	B	C	D	G	Aw*	Cw*
18	27	3.69	29.5	13	21.38	33	35.5
20	29	3.69	31.5	13	23.38	35	37.5
24	33	3.69	35.5	13	27.38	39	41.5
30	39	3.69	41.5	13	33.38	45	47.5
36	45	3.69	47.5	13	39.38	51	53.5
42	51	3.69	53.5	13	45.38	57	59.5
48	57	3.69	59.5	13	51.38	63	65.5
54	63	3.69	65.5	13	57.38	69	71.5
60	69	3.69	71.5	13	63.38	75	77.5

Steel Flat Carry Self-Aligners

Belt Width	4" Roll Diameter			5" Roll Diameter			6" Roll Diameter		
	Part Number	Wt.	Replacement Roll	Part Number	Wt.	Replacement Roll	Part Number	Wt.	Replacement Roll
18	C4-FSA-18	75	C4-R-18	C5-FSA-18-09	78	C5-R-18-09	C6-FSA-18-09	81	C6-R-18-09
20	C4-FSA-20	78	C4-R-20	C5-FSA-20-09	82	C5-R-20-09	C6-FSA-20-09	85	C6-R-20-09
24	C4-FSA-24	85	C4-R-24	C5-FSA-24-09	89	C5-R-24-09	C6-FSA-24-09	93	C6-R-24-09
30	C4-FSA-30	95	C4-R-30	C5-FSA-30-09	100	C5-R-30-09	C6-FSA-30-09	105	C6-R-30-09
36	C4-FSA-36	106	C4-R-36	C5-FSA-36-09	111	C5-R-36-09	C6-FSA-36-09	117	C6-R-36-09
42	C4-FSA-42	116	C4-R-42	C5-FSA-42-09	122	C5-R-42-09	C6-FSA-42-09	129	C6-R-42-09
48	C4-FSA-48	126	C4-R-48	C5-FSA-48-09	134	C5-R-48-09	C6-FSA-48-09	141	C6-R-48-09
*54	C4-FSA-54	137	C4-R-54	C5-FSA-54-09	145	C5-R-54-09	C6-FSA-54-09	153	C6-R-54-09
*60	C4-FSA-60	147	C4-R-60	C5-FSA-60-09	156	C5-R-60-09	C6-FSA-60-09	165	C6-R-60-09

*CEMA recommends Class D

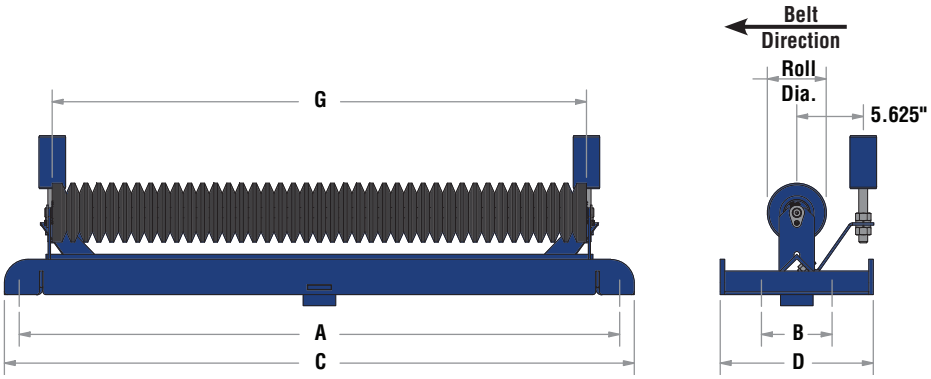

Belt Width	Standard Dimensions					Wide Base	
	A	B	C	D	G	Aw*	Cw*
18	27	3.69	29.5	13	21.38	33	35.5
20	29	3.69	31.5	13	23.38	35	37.5
24	33	3.69	35.5	13	27.38	39	41.5
30	39	3.69	41.5	13	33.38	45	47.5
36	45	3.69	47.5	13	39.38	51	53.5
42	51	3.69	53.5	13	45.38	57	59.5
48	57	3.69	59.5	13	51.38	63	65.5
54	63	3.69	65.5	13	57.38	69	71.5
60	69	3.69	71.5	13	63.38	75	77.5

Rubber Disc Flat Carry Self-Aligner

Belt Width	4" Roll Diameter			5" Roll Diameter			6" Roll Diameter		
	Part Number	Wt.	Replacement Roll	Part Number	Wt.	Replacement Roll	Part Number	Wt.	Replacement Roll
18	C4-FRDSA-18	77	C4-FRD-18	C5-FRDSA-18	80	C5-FRD-18	C6-FRDSA-18	84	C6-FRD-18
20	C4-FRDSA-20	81	C4-FRD-20	C5-FRDSA-20	84	C5-FRD-20	C6-FRDSA-20	88	C6-FRD-20
24	C4-FRDSA-24	88	C4-FRD-24	C5-FRDSA-24	93	C5-FRD-24	C6-FRDSA-24	97	C6-FRD-24
30	C4-FRDSA-30	100	C4-FRD-30	C5-FRDSA-30	105	C5-FRD-30	C6-FRDSA-30	111	C6-FRD-30
36	C4-FRDSA-36	111	C4-FRD-36	C5-FRDSA-36	117	C5-FRD-36	C6-FRDSA-36	124	C6-FRD-36
42	C4-FRDSA-42	123	C4-FRD-42	C5-FRDSA-42	129	C5-FRD-42	C6-FRDSA-42	137	C6-FRD-42
48	C4-FRDSA-48	134	C4-FRD-48	C5-FRDSA-48	142	C5-FRD-48	C6-FRDSA-48	151	C6-FRD-48
54	C4-FRDSA-54	145	C4-FRD-54	C5-FRDSA-54	154	C5-FRD-54	C6-FRDSA-54	164	C6-FRD-54
60	C4-FRDSA-60	157	C4-FRD-60	C5-FRDSA-60	166	C5-FRD-60	C6-FRDSA-60	177	C6-FRD-60

*CEMA recommends Class D

Shoe-Type Self-Aligner Available

CEMA C
Live Shaft Rolls

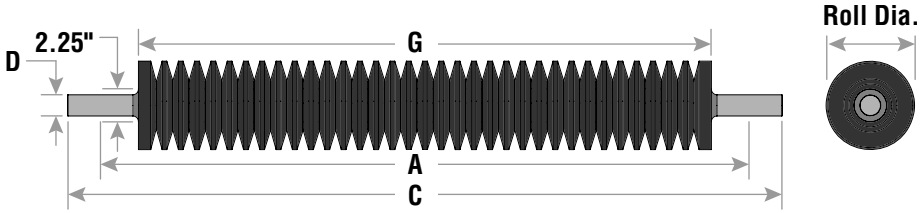

Impact Live Shaft Roll

Belt Width	Standard Dimensions			5" Roll Diameter				6" Roll Diameter			
				D = 1.44"		D = 1.94"		D = 1.44"		D = 1.94"	
	A	C	G	Part Number	Wt.	Part Number	Wt.	Part Number	Wt.	Part Number	Wt.
18	27	30.75	21.38	C5-LI23-18	36	C5-LI31-18	40	C6-LI23-18	40	C6-LI31-18	44
20	29	32.75	23.38	C5-LI23-20	40	C5-LI31-20	43	C6-LI23-20	44	C6-LI31-20	47
24	33	36.75	27.38	C5-LI23-24	45	C5-LI31-24	49	C6-LI23-24	50	C6-LI31-24	55
30	39	42.75	33.38	C5-LI23-30	55	C5-LI31-30	58	C6-LI23-30	60	C6-LI31-30	64
36	45	48.75	39.38	C5-LI23-36	63	C5-LI31-36	67	C6-LI23-36	70	C6-LI31-36	74
42	51	54.75	45.38	C5-LI23-42	73	C5-LI31-42	76	C6-LI23-42	81	C6-LI31-42	84
48	57	60.75	51.38	C5-LI23-48	82	C5-LI31-48	85	C6-LI23-48	90	C6-LI31-48	94
54	63	66.75	57.38	C5-LI23-54	90	C5-LI31-54	94	C6-LI23-54	100	C6-LI31-54	104
60	69	72.75	63.38	C5-LI23-60	100	C5-LI31-60	103	C6-LI23-60	111	C6-LI31-60	114

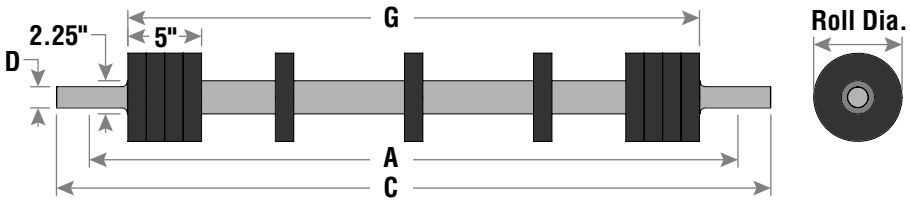

Rubber Disc Return Live Shaft Roll

Belt Width	Standard Dimensions			5" Roll Diameter				6" Roll Diameter			
				D = 1.44"		D = 1.94"		D = 1.44"		D = 1.94"	
	A	C	G	Part Number	Wt.	Part Number	Wt.	Part Number	Wt.	Part Number	Wt.
18	27	30.75	21.38	C5-LRRD23-18	34	C5-LRRD31-18	38	C6-LRRD23-18	37	C6-LRRD31-18	41
20	29	32.75	23.38	C5-LRRD23-20	36	C5-LRRD31-20	40	C6-LRRD23-20	40	C6-LRRD31-20	43
24	33	36.75	27.38	C5-LRRD23-24	42	C5-LRRD31-24	45	C6-LRRD23-24	45	C6-LRRD31-24	49
30	39	42.75	33.38	C5-LRRD23-30	49	C5-LRRD31-30	53	C6-LRRD23-30	53	C6-LRRD31-30	57
36	45	48.75	39.38	C5-LRRD23-36	56	C5-LRRD31-36	60	C6-LRRD23-36	61	C6-LRRD31-36	60
42	51	54.75	45.38	C5-LRRD23-42	64	C5-LRRD31-42	67	C6-LRRD23-42	68	C6-LRRD31-42	72
48	57	60.75	51.38	C5-LRRD23-48	71	C5-LRRD31-48	75	C6-LRRD23-48	76	C6-LRRD31-48	80
54	63	66.75	57.38	C5-LRRD23-54	79	C5-LRRD31-54	82	C6-LRRD23-54	84	C6-LRRD31-54	88
60	69	72.75	63.38	C5-LRRD23-60	86	C5-LRRD31-60	90	C6-LRRD23-60	92	C6-LRRD31-60	95

CEMA C
Steel Inverted V-Returns

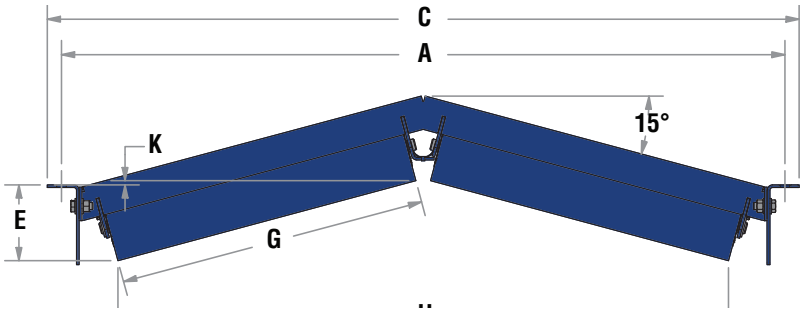

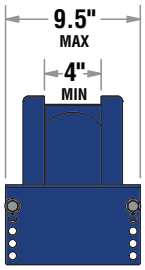

Belt Width	Standard Dimensions		
	A	C	G
18	27	29	8.94
24	33	35	13.25
30	39	41	15.44
36	45	47	17.63
42	51	53	21.75
48	57	59	23.38
54	63	65	27.38
60	69	71	30.88

Steel Inverted V-Returns

Belt Width	5" Roll Diameter						6" Roll Diameter					
	Part Number	E	H	K	Wt.	Replacement Rolls	Part Number	E	H	K	Wt.	Replacement Rolls
18	C5-15IV-18-09	5.19	18.25	2.88	42	C5-T-24-09	C6-15IV-18-09	5.63	18.00	3.31	45	C6-T-24-09
24	C5-15IV-24-09	5.50	26.63	2.00	51	C5-T-36-09	C6-15IV-24-09	6.00	26.38	2.50	55	C6-T-36-09
30	C5-15IV-30-09	5.25	30.94	1.25	57	C5-T-42-09	C6-15IV-30-09	5.75	30.63	1.75	62	C6-T-42-09
36	C5-15IV-36-09	5.00	35.00	0.44	63	C5-T-48-09	C6-15IV-36-09	5.50	34.81	0.94	68	C6-T-48-09
42	C5-15IV-42-09	5.25	43.00	0.38	72	C5-T-60-09	C6-15IV-42-09	5.75	42.75	0.13	78	C6-T-60-09
48	C5-15IV-48-09	4.88	46.19	1.13	76	C5-R-20-09	C6-15IV-48-09	5.38	45.94	0.69	84	C6-R-20-09
54	C5-15IV-54-09	5.13	53.94	2.00	85	C5-R-24-09	C6-15IV-54-09	5.63	53.69	1.50	93	C6-R-24-09
60	C5-15IV-60-09	5.25	60.69	2.75	93	C5-IV-60-09	C6-15IV-60-09	5.75	60.44	2.25	102	C6-IV-60-09

CEMA C
Rubber Disc Inverted V-Returns

Belt Width	Standard Dimensions		
	A	C	G
18	27	29	8.94
24	33	35	13.25
30	39	41	15.44
36	45	47	17.63
42	51	53	21.75
48	57	59	23.38
54	63	65	27.38
60	69	71	30.88

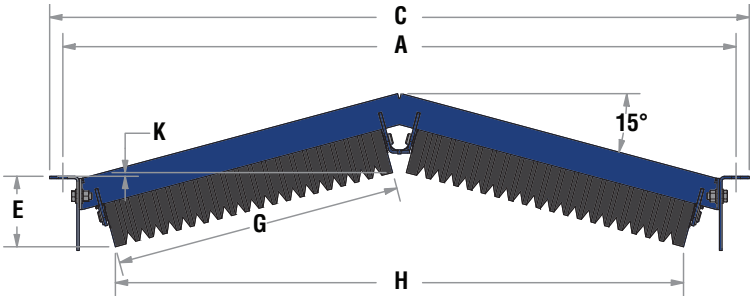

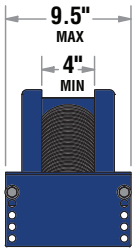

Rubber Disc Inverted V-Returns

Belt Width	5" Roll Diameter						6" Roll Diameter					
	Part Number	E	H	K	Wt.	Replacement Roll	Part Number	E	H	K	Wt.	Replacement Roll
18	C5-15IVRD-18	5.19	18.25	2.88	42	C5-TI-24	C6-15IVRD-18	5.63	18.00	3.31	45	C6-TI-24
24	C5-15IVRD-24	5.50	26.63	2.00	53	C5-TI-36	C6-15IVRD-24	6.00	26.38	2.50	57	C6-TI-36
30	C5-15IVRD-30	5.25	30.94	1.25	60	C5-TI-42	C6-15IVRD-30	5.75	30.63	1.75	65	C6-TI-42
36	C5-15IVRD-36	5.00	35.00	0.44	66	C5-TI-48	C6-15IVRD-36	5.50	34.81	0.94	72	C6-TI-48
42	C5-15IVRD-42	5.25	43.00	0.38	77	C5-TI-60	C6-15IVRD-42	5.75	42.75	0.13	84	C6-TI-60
48	C5-15IVRD-48	4.88	46.19	1.13	81	C5-FRD-20	C6-15IVRD-48	5.38	45.94	0.69	90	C6-FRD-20
54	C5-15IVRD-54	5.13	53.94	2.00	92	C5-FRD-24	C6-15IVRD-54	5.63	53.69	1.50	102	C6-FRD-24
60	C5-15IVRD-60	5.25	60.69	2.75	101	C5-IVRD-60	C6-15IVRD-60	5.75	60.44	2.25	113	C6-IVRD-60

CEMA D Series
Idler Features & Benefits

The D Series Idler sets a standard for the industry

- Manufactured using sealed for life ball bearings for long maintenance free operation
- Martin Premium Triple Labyrinth Seal guard bearing protection
- Conform to all CEMA D load and dimensional requirements
- Minimum 9 Gauge tubing on all CEMA D rolls
- Protected roll weld
- Martin Triple Labyrinth Seal guard offers a balance of seal performance and low rolling resistance

CEMA D Load Ratings

Belt Width	Troughing Angle			Steel Return & Flat	Unequal (Picking)	Live Shaft
	20º	35º	45º			
18	1,200	1,200	1,200	600	–	–
24	1,200	1,200	1,200	600	600	1,400
30	1,200	1,200	1,200	600	600	1,400
36	1,200	1,200	1,200	600	600	1,400
42	1,200	1,200	1,200	500	600	1,400
48	1,200	1,200	1,200	425	530	1,275
54	1,200	1,116	1,080	375	440	1,150
60	1,150	1,070	1,035	280	440	1,000
72	1,050	977	945	155	280	850
Two Steel V-Returns (All)				850	–	–

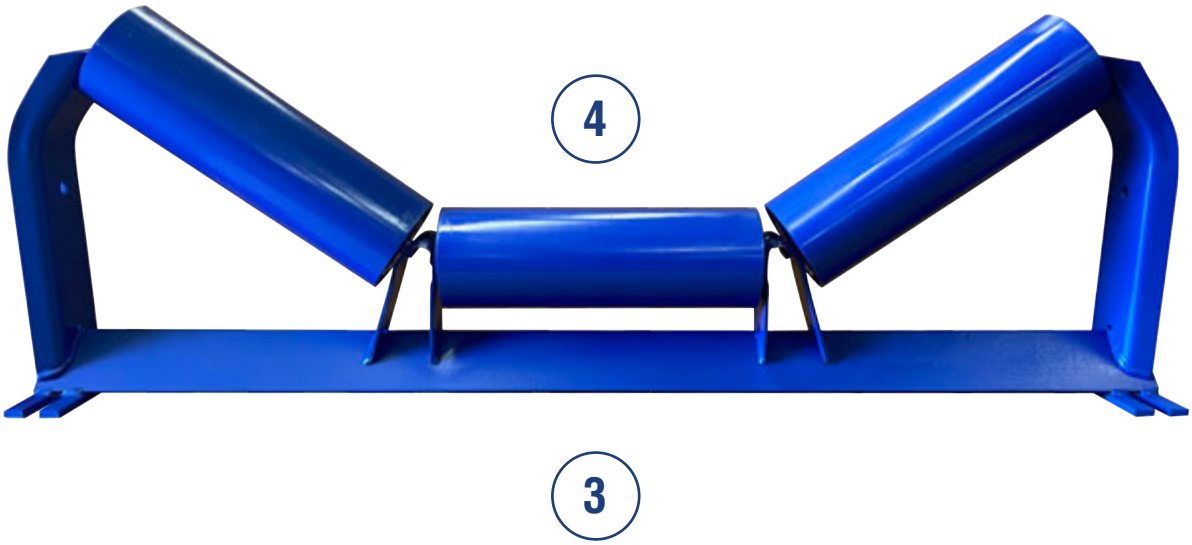

CEMA D Series
Idler Features & Benefits

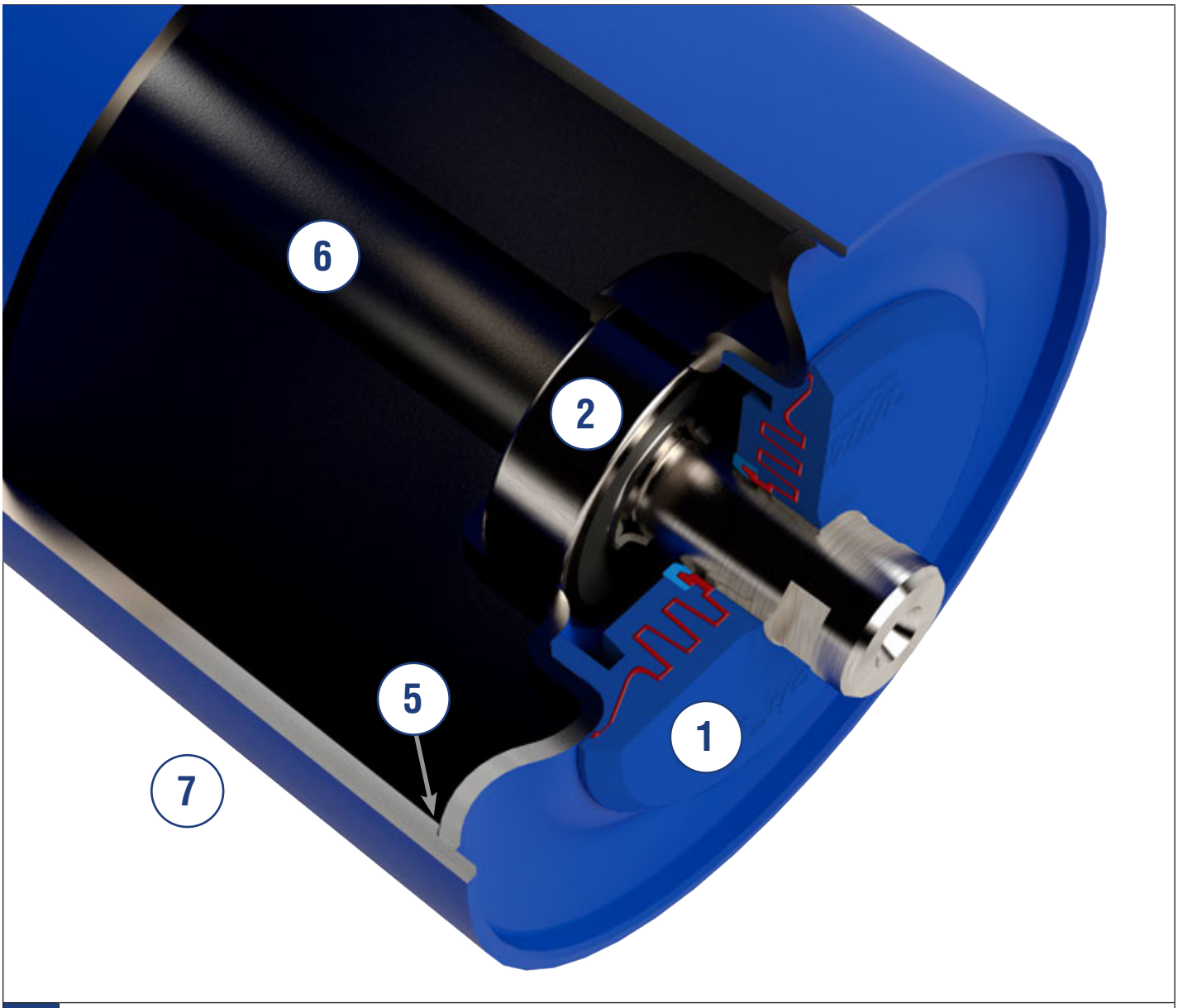

1	Martin Triple Labyrinth Seal design offers the following exclusive Martin bearing protection • External shield deters impurities from entering the bearing housing • Flinger design removes contaminates away from the bearing housing by centrifugal force • Grease is injected into the labyrinth chambers during manufacturing to add an additional layer of protection against bearing contamination • The contact lip seal adds an additional level of protection against moisture & fine particulate contaminants
2	CEMA D Idlers have sealed for life ball bearings
3	CEMA D Idlers standard product line is 24" to 72" belt widths
4	Martin CEMA D Idlers offer low rolling resistance that allows for lower operating cost
5	Recessed & protected bearing housing weld protects against wear from belt
6	Oversized, solid steel shaft machined to 25 mm for bearings
7	Martin Idlers have low TIR

CEMA D
Equal Steel Idlers

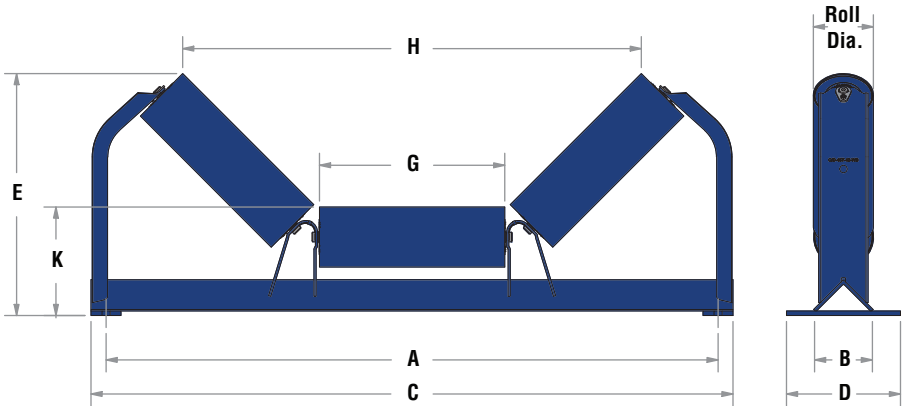

Belt Width	Standard Dimensions					Wide Base	
	A	B	C	D	G	Aw*	Cw*
24	33	5.5	35.5	8	8.94	39	41.5
30	39	5.5	41.5	9.5	11.13	45	47.5
36	45	5.5	47.5	9.5	13.25	51	53.5
42	51	5.5	53.5	9.5	15.44	57	59.5
48	57	5.5	59.5	9.5	17.63	63	65.5
54	63	7	65.5	11	19.75	69	71.5
60	69	7	71.5	11	21.75	75	77.5
72	81	7	83.5	11	26	87	89.5

*Dimension not shown; for wide base.

20º Equal Steel Idlers

Belt Width	5" Roll Diameter						6" Roll Diameter					
	Part Number	E	H	K	Wt.	Replacement Roll	Part Number	E	H	K	Wt.	Replacement Roll
24	D5-20T-24-09	11.75	26.94	8.5	54	D5-T-24-09	D6-20T-24-09	12.19	26.63	9	59	D6-T-24-09
30	D5-20T-30-09	12.63	33.25	8.63	64	D5-T-30-09	D6-20T-30-09	13.06	32.88	9.13	70	D6-T-30-09
36	D5-20T-36-09	13.31	39.31	8.63	72	D5-T-36-09	D6-20T-36-09	13.75	39	9.13	78	D6-T-36-09
42	D5-20T-42-09	14.44	45.63	9	83	D5-T-42-09	D6-20T-42-09	14.94	45.31	9.5	90	D6-T-42-09
48	D5-20T-48-09	15.25	51.94	9	91	D5-T-48-09	D6-20T-48-09	15.68	51.63	9.5	99	D6-T-48-09
54	D5-20T-54-09	15.94	58.06	9	112	D5-T-54-09	D6-20T-54-09	16.44	57.75	9.5	121	D6-T-54-09
60	D5-20T-60-09	16.94	63.81	9.38	120	D5-T-60-09	D6-20T-60-09	17.44	63.5	9.88	130	D6-T-60-09
72	D5-20T-72-09	18.39	76.06	9.38	139	D5-T-72-09	D6-20T-72-09	18.88	75.68	9.88	151	D6-T-72-09

35º Equal Steel Idlers

Belt Width	5" Roll Diameter						6" Roll Diameter					
	Part Number	E	H	K	Wt.	Replacement Roll	Part Number	E	H	K	Wt.	Replacement Roll
24	D5-35T-24-09	13.81	24.31	8.5	56	D5-T-24-09	D6-35T-24-09	14.18	23.75	9	61	D6-T-24-09
30	D5-35T-30-09	15.19	30.13	8.63	66	D5-T-30-09	D6-35T-30-09	15.63	29.5	9.13	72	D6-T-30-09
36	D5-35T-36-09	16.38	35.68	8.63	74	D5-T-36-09	D6-35T-36-09	16.81	35.13	9.13	81	D6-T-36-09
42	D5-35T-42-09	18.06	41.5	9	85	D5-T-42-09	D6-35T-42-09	18.44	40.94	9.5	93	D6-T-42-09
48	D5-35T-48-09	19.31	47.25	9	94	D5-T-48-09	D6-35T-48-09	19.69	46.69	9.5	102	D6-T-48-09
54	D5-35T-54-09	20.5	52.88	9	115	D5-T-54-09	D6-35T-54-09	20.88	52.25	9.5	124	D6-T-54-09
60	D5-35T-60-09	22	58.13	9.38	124	D5-T-60-09	D6-35T-60-09	22.44	57.5	9.88	134	D6-T-60-09
72	D5-35T-72-09	24.44	69.31	9.38	143	D5-T-72-09	D6-35T-72-09	24.81	68.75	9.88	155	D6-T-72-09

45º Equal Steel Idlers

Belt Width	5" Roll Diameter						6" Roll Diameter					
	Part Number	E	H	K	Wt.	Replacement Roll	Part Number	E	H	K	Wt.	Replacement Roll
24	D5-45T-24-09	15.06	22.5	8.5	57	D5-T-24-09	D6-45T-24-09	15.44	21.81	9	62	D6-T-24-09
30	D5-45T-30-09	16.75	27.75	8.63	68	D5-T-30-09	D6-45T-30-09	17.06	27.06	9.13	74	D6-T-30-09
36	D5-45T-36-09	18.25	32.94	8.63	76	D5-T-36-09	D6-45T-36-09	18.63	32.18	9.13	83	D6-T-36-09
42	D5-45T-42-09	20.19	38.19	9	88	D5-T-42-09	D6-45T-42-09	20.5	37.5	9.5	95	D6-T-42-09
48	D5-45T-48-09	21.68	43.5	9	97	D5-T-48-09	D6-45T-48-09	22.06	42.75	9.5	105	D6-T-48-09
54	D5-45T-54-09	23.25	48.63	9	118	D5-T-54-09	D6-45T-54-09	23.56	47.94	9.5	127	D6-T-54-09
60	D5-45T-60-09	25	53.44	9.38	128	D5-T-60-09	D6-45T-60-09	25.31	52.75	9.88	138	D6-T-60-09
72	D5-45T-72-09	28	63.69	9.38	147	D5-T-72-09	D6-45T-72-09	28.31	63	9.88	159	D6-T-72-09

CEMA D
Equal Impact Idlers

Belt Width	Standard Dimensions					Wide Base	
	A	B	C	D	G	Aw*	Cw*
24	33	5.5	35.5	8	8.94	39	41.5
30	39	5.5	41.5	9.5	11.13	45	47.5
36	45	5.5	47.5	9.5	13.25	51	53.5
42	51	5.5	53.5	9.5	15.44	57	59.5
48	57	5.5	59.5	9.5	17.63	63	65.5
54	63	7	65.5	11	19.75	69	71.5
60	69	7	71.5	11	21.75	75	77.5
72	81	7	83.5	11	26	87	89.5

*Dimension not shown; for wide base.

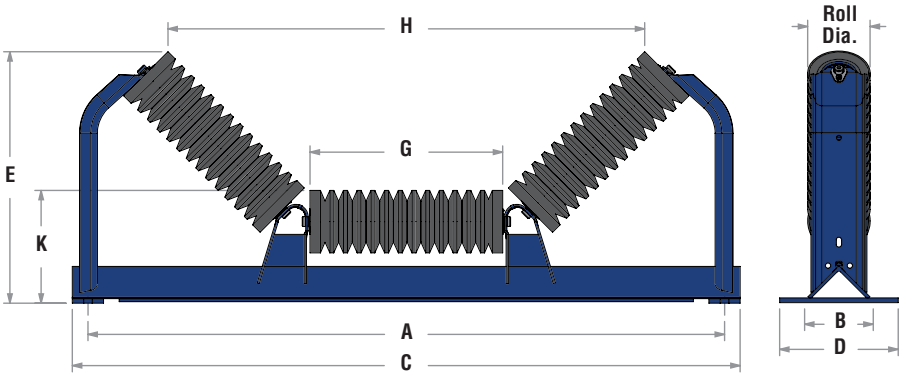

20º Equal Impact Idlers

Belt Width	5" Roll Diameter						6" Roll Diameter					
	Part Number	E	H	K	Wt.	Replacement Roll	Part Number	E	H	K	Wt.	Replacement Roll
24	D5-20TI-24	11.75	26.94	8.5	64	D5-TI-24	D6-20TI-24	12.19	26.63	9	69	D6-TI-24
30	D5-20TI-30	12.63	33.25	8.63	77	D5-TI-30	D6-20TI-30	13.06	32.88	9.13	84	D6-TI-30
36	D5-20TI-36	13.31	39.31	8.63	89	D5-TI-36	D6-20TI-36	13.75	39	9.13	96	D6-TI-36
42	D5-20TI-42	14.44	45.63	9	105	D5-TI-42	D6-20TI-42	14.94	45.31	9.5	114	D6-TI-42
48	D5-20TI-48	15.25	51.94	9	117	D5-TI-48	D6-20TI-48	15.68	51.63	9.5	127	D6-TI-48
54	D5-20TI-54	15.94	58.06	9	144	D5-TI-54	D6-20TI-54	16.44	57.75	9.5	155	D6-TI-54
60	D5-20TI-60	16.94	63.81	9.38	157	D5-TI-60	D6-20TI-60	17.44	63.5	9.88	169	D6-TI-60
72	D5-20TI-72	18.39	76.06	9.38	183	D5-TI-72	D6-20TI-72	18.88	75.68	9.88	198	D6-TI-72

35º Equal Impact Idlers

Belt Width	5" Roll Diameter						6" Roll Diameter					
	Part Number	E	H	K	Wt.	Replacement Roll	Part Number	E	H	K	Wt.	Replacement Roll
24	D5-35TI-24	13.81	24.31	8.5	66	D5-TI-24	D6-35TI-24	14.18	23.75	9	71	D6-TI-24
30	D5-35TI-30	15.19	30.13	8.63	79	D5-TI-30	D6-35TI-30	15.63	29.5	9.13	86	D6-TI-30
36	D5-35TI-36	16.38	35.68	8.63	91	D5-TI-36	D6-35TI-36	16.81	35.13	9.13	99	D6-TI-36
42	D5-35TI-42	18.06	41.5	9	108	D5-TI-42	D6-35TI-42	18.44	40.94	9.5	117	D6-TI-42
48	D5-35TI-48	19.31	47.25	9	120	D5-TI-48	D6-35TI-48	19.69	46.69	9.5	130	D6-TI-48
54	D5-35TI-54	20.5	52.88	9	147	D5-TI-54	D6-35TI-54	20.88	52.25	9.5	158	D6-TI-54
60	D5-35TI-60	22	58.13	9.38	160	D5-TI-60	D6-35TI-60	22.44	57.5	9.88	173	D6-TI-60
72	D5-35TI-72	24.44	69.31	9.38	187	D5-TI-72	D6-35TI-72	24.81	68.75	9.88	203	D6-TI-72

45º Equal Impact Idlers

Belt Width	5" Roll Diameter						6" Roll Diameter					
	Part Number	E	H	K	Wt.	Replacement Roll	Part Number	E	H	K	Wt.	Replacement Roll
24	D5-45TI-24	15.06	22.5	8.5	68	D5-TI-24	D6-45TI-24	15.44	21.81	9	73	D6-TI-24
30	D5-45TI-30	16.75	27.75	8.63	82	D5-TI-30	D6-45TI-30	17.06	27.06	9.13	88	D6-TI-30
36	D5-45TI-36	18.25	32.94	8.63	94	D5-TI-36	D6-45TI-36	18.63	32.18	9.13	101	D6-TI-36
42	D5-45TI-42	20.19	38.19	9	111	D5-TI-42	D6-45TI-42	20.5	37.5	9.5	120	D6-TI-42
48	D5-45TI-48	21.68	43.5	9	123	D5-TI-48	D6-45TI-48	22.06	42.75	9.5	134	D6-TI-48
54	D5-45TI-54	23.25	48.63	9	151	D5-TI-54	D6-45TI-54	23.56	47.94	9.5	162	D6-TI-54
60	D5-45TI-60	25	53.44	9.38	164	D5-TI-60	D6-45TI-60	25.31	52.75	9.88	177	D6-TI-60
72	D5-45TI-72	28	63.69	9.38	192	D5-TI-72	D6-45TI-72	28.31	63	9.88	207	D6-TI-72

CEMA D
Unequal Steel Idlers

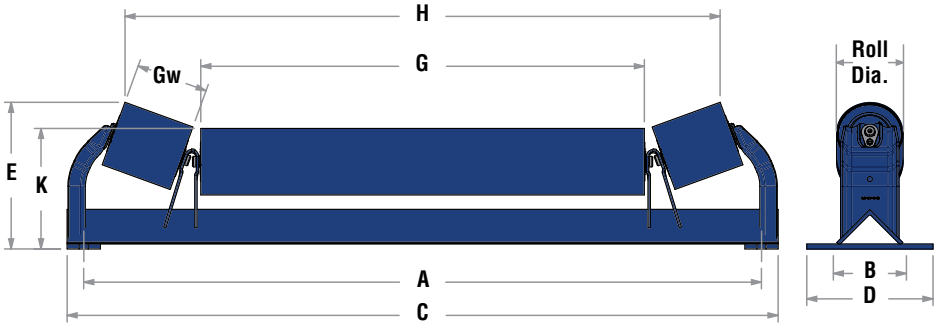

Belt Width	Standard Dimensions				Wide Base	
	A	B	C	D	Aw*	Cw*
24	33	5.5	35.5	9.5	39	41.5
30	39	5.5	41.5	9.5	45	47.5
36	45	5.5	47.5	9.5	51	53.5
42	51	5.5	53.5	9.5	57	59.5
48	57	5.5	59.5	9.5	63	65.5
54	63	7	65.5	11	69	71.5
60	69	7	71.5	11	75	77.5
72	81	7	83.5	11	87	89.5

*Dimension not shown; for wide base.

20º Unequal Steel Idlers

Belt Width	G	Gw	5" Roll Diameter							6" Roll Diameter						
			Part Number	E	H	K	Wt.	Replacement Center Roll	Replacement Wing Roll	Part Number	E	H	K	Wt.	Replacement Center Roll	Replacement Wing Roll
24	15.44	5.44	D5-20U-24-09	10.50	26.88	8.5	53	D5-T-42-09	D5-T-14-09	D6-20U-24-09	11	26.5	9	57	D6-T-42-09	D6-T-14-09
30	21.38	5.44	D5-20U-30-09	10.63	32.81	8.63	61	D5-R-18-09		D6-20U-30-09	11.13	32.44	9.13	67	D6-R-18-09	
36	27.38	5.44	D5-20U-36-09	10.63	38.81	8.63	69	D5-R-24-09		D6-20U-36-09	11.13	38.44	9.13	75	D6-R-24-09	
42	33.38	5.44	D5-20U-42-09	11.00	44.81	9	78	D5-R-30-09		D6-20U-42-09	11.5	44.44	9.5	86	D6-R-30-09	
48	39.38	5.44	D5-20U-48-09	11.00	50.81	9	86	D5-R-36-09		D6-20U-48-09	11.5	50.44	9.5	94	D6-R-36-09	
54	45.38	5.44	D5-20U-54-09	11.39	56.81	9	106	D5-R-42-09		D6-20U-54-09	11.81	56.44	9.5	115	D6-R-42-09	
60	51.38	5.44	D5-20U-60-09	11.39	62.81	9.38	114	D5-R-48-09		D6-20U-60-09	11.81	62.44	9.88	124	D6-R-48-09	
72	63.38	5.44	D5-20U-72-09	11.39	74.79	9.38	131	D5-R-60-09		D6-20U-72-09	11.81	74.44	9.88	142	D6-R-60-09	

35º Unequal Steel Idlers

Belt Width	G	Gw	5" Roll Diameter							6" Roll Diameter						
			Part Number	E	H	K	Wt.	Replacement Center Roll	Replacement Wing Roll	Part Number	E	H	K	Wt.	Replacement Center Roll	Replacement Wing Roll
24	13.25	6.75	D5-35U-24-09	12.5	25.06	8.5	55	D5-T-36-09	D5-T-18-09	D6-35U-24-09	12.94	24.5	9	60	D6-T-36-09	D6-T-18-09
30	15.44	8.94	D5-35U-30-09	13.94	30.81	8.63	65	D5-T-42-09	D5-T-24-09	D6-35U-30-09	14.31	30.25	9.13	71	D6-T-42-09	D6-T-24-09
36	19.75	8.94	D5-35U-36-09	13.94	35.13	8.63	71	D5-T-54-09		D6-35U-36-09	14.31	34.56	9.13	77	D6-T-54-09	
42	21.38	11.13	D5-35U-42-09	15.56	40.38	9	81	D5-R-18-09	D5-T-30-09	D6-35U-42-09	16	39.75	9.5	89	D6-R-18-09	D6-T-30-09
48	27.38	11.13	D5-35U-48-09	15.56	46.38	9	89	D5-R-24-09		D6-35U-48-09	16	45.75	9.5	97	D6-R-24-09	
54	33.38	11.13	D5-35U-54-09	15.88	52.38	9	109	D5-R-30-09		D6-35U-54-09	16.31	51.75	9.5	118	D6-R-30-09	
60	39.38	11.13	D5-35U-60-09	15.88	58.38	9.38	117	D5-R-36-09		D6-35U-60-09	16.31	57.75	9.88	127	D6-R-36-09	
72	51.38	11.13	D5-35U-72-09	15.88	70.38	9.38	134	D5-R-48-09		D6-35U-72-09	16.31	69.75	9.88	145	D6-R-48-09	

CEMA D
Unequal Impact Idlers

Belt Width	Standard Dimensions				Wide Base	
	A	B	C	D	Aw*	Cw*
24	33	5.5	35.5	9.5	39	41.5
30	39	5.5	41.5	9.5	45	47.5
36	45	5.5	47.5	9.5	51	53.5
42	51	5.5	53.5	9.5	57	59.5
48	57	5.5	59.5	9.5	63	65.5
54	63	7	65.5	11	69	71.5
60	69	7	71.5	11	75	77.5
72	81	7	83.5	11	87	89.5

*Dimension not shown; for wide base.

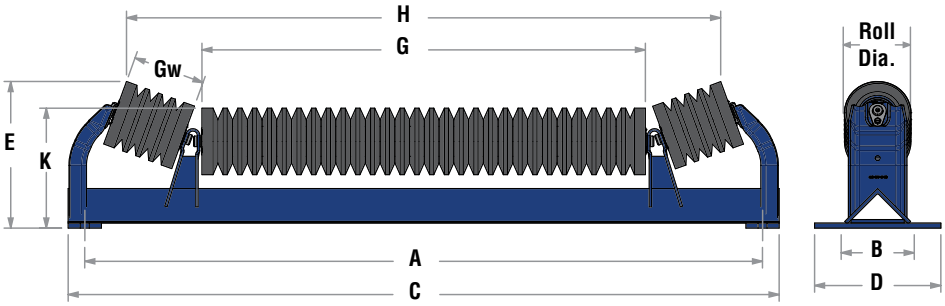

20º Unequal Impact Idlers

Belt Width	G	Gw	5" Roll Diameter							6" Roll Diameter						
			Part Number	E	H	K	Wt.	Replacement Center Roll	Replacement Wing Roll	Part Number	E	H	K	Wt.	Replacement Center Roll	Replacement Wing Roll
24	15.44	5.44	D5-20UI-24	10.50	26.88	8.5	62	D5-TI-42	D5-TI-14	D6-20UI-24	11	26.5	9	68	D6-TI-42	D6-TI-14
30	21.38	5.44	D5-20UI-30	10.63	32.81	8.63	75	D5-FRD-18		D6-20UI-30	11.13	32.44	9.13	81	D6-FRD-18	
36	27.38	5.44	D5-20UI-36	10.63	38.81	8.63	85	D5-FRD-24		D6-20UI-36	11.13	38.44	9.13	93	D6-FRD-24	
42	33.38	5.44	D5-20UI-42	11.00	44.81	9	101	D5-FRD-30		D6-20UI-42	11.5	44.44	9.5	109	D6-FRD-30	
48	39.38	5.44	D5-20UI-48	11.00	50.81	9	111	D5-FRD-36		D6-20UI-48	11.5	50.44	9.5	121	D6-FRD-36	
54	45.38	5.44	D5-20UI-54	11.39	56.81	9	137	D5-FRD-42		D6-20UI-54	11.81	56.44	9.5	148	D6-FRD-42	
60	51.38	5.44	D5-20UI-60	11.39	62.81	9.38	149	D5-FRD-48		D6-20UI-60	11.81	62.44	9.88	161	D6-FRD-48	
72	63.38	5.44	D5-20UI-72	11.39	74.79	9.38	174	D5-FRD-60		D6-20UI-72	11.81	74.44	9.88	189	D6-FRD-60	

35º Unequal Impact Idlers

Belt Width	G	Gw	5" Roll Diameter							6" Roll Diameter						
			Part Number	E	H	K	Wt.	Replacement Center Roll	Replacement Wing Roll	Part Number	E	H	K	Wt.	Replacement Center Roll	Replacement Wing Roll
24	13.25	6.75	D5-35UI-24	12.5	25.06	8.5	65	D5-TI-36	D5-TI-18	D6-35UI-24	12.94	24.5	9	70	D6-TI-36	D6-TI-18
30	15.44	8.94	D5-35UI-30	13.94	30.81	8.63	79	D5-TI-42	D5-TI-24	D6-35UI-30	14.31	30.25	9.13	85	D6-TI-42	D6-TI-24
36	19.75	8.94	D5-35UI-36	13.94	35.13	8.63	87	D5-TI-54		D6-35UI-36	14.31	34.56	9.13	95	D6-TI-54	
42	21.38	11.13	D5-35UI-42	15.56	40.38	9	103	D5-FRD-18	D5-TI-30	D6-35UI-42	16	39.75	9.5	112	D6-FRD-18	D6-TI-30
48	27.38	11.13	D5-35UI-48	15.56	46.38	9	114	D5-FRD-24		D6-35UI-48	16	45.75	9.5	124	D6-FRD-24	
54	33.38	11.13	D5-35UI-54	15.88	52.38	9	140	D5-FRD-30		D6-35UI-54	16.31	51.75	9.5	151	D6-FRD-30	
60	39.38	11.13	D5-35UI-60	15.88	58.38	9.38	152	D5-FRD-36		D6-35UI-60	16.31	57.75	9.88	164	D6-FRD-36	
72	51.38	11.13	D5-35UI-72	15.88	70.38	9.38	177	D5-FRD-48		D6-35UI-72	16.31	69.75	9.88	191	D6-FRD-48	

CEMA D
Steel Returns

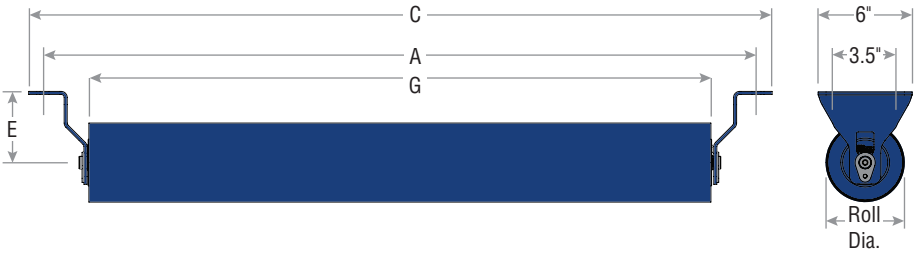

Belt Width	Standard Dimensions		
	A	C	G
24	33	35	27.38
30	39	41	33.38
36	45	47	39.38
42	51	53	45.38
48	57	59	51.38
54	63	65	57.38
60	69	71	63.38
72	81	83	75.38

Steel Returns (E = 1.5")

Belt Width	5" Roll Diameter			6" Roll Diameter		
	Part Number	Wt.	Replacement Roll	Part Number	Wt.	Replacement Roll
24	D5-R-24-09-1	28	D5-R-24-09	D6-R-24-09-1	32	D6-R-24-09
30	D5-R-30-09-1	34	D5-R-30-09	D6-R-30-09-1	38	D6-R-30-09
36	D5-R-36-09-1	39	D5-R-36-09	D6-R-36-09-1	44	D6-R-36-09
42	D5-R-42-09-1	44	D5-R-42-09	D6-R-42-09-1	51	D6-R-42-09
48	D5-R-48-09-1	49	D5-R-48-09	D6-R-48-09-1	57	D6-R-48-09
54	D5-R-54-09-1	55	D5-R-54-09	D6-R-54-09-1	63	D6-R-54-09
60	D5-R-60-09-1	60	D5-R-60-09	D6-R-60-09-1	69	D6-R-60-09
72	D5-R-72-09-1	71	D5-R-72-09	D6-R-72-09-1	81	D6-R-72-09

Steel Returns (E = 4.5")

Belt Width	5" Roll Diameter			6" Roll Diameter		
	Part Number	Wt.	Replacement Roll	Part Number	Wt.	Replacement Roll
24	D5-R-24-09-4	30	D5-R-24-09	D6-R-24-09-4	34	D6-R-24-09
30	D5-R-30-09-4	36	D5-R-30-09	D6-R-30-09-4	40	D6-R-30-09
36	D5-R-36-09-4	41	D5-R-36-09	D6-R-36-09-4	46	D6-R-36-09
42	D5-R-42-09-4	46	D5-R-42-09	D6-R-42-09-4	53	D6-R-42-09
48	D5-R-48-09-4	51	D5-R-48-09	D6-R-48-09-4	59	D6-R-48-09
54	D5-R-54-09-4	57	D5-R-54-09	D6-R-54-09-4	65	D6-R-54-09
60	D5-R-60-09-4	62	D5-R-60-09	D6-R-60-09-4	71	D6-R-60-09
72	D5-R-72-09-4	73	D5-R-72-09	D6-R-72-09-4	83	D6-R-72-09

Steel Returns (E = 4.5", Belt Saver)

Belt Width	5" Roll Diameter			6" Roll Diameter		
	Part Number	Wt.	Replacement Roll	Part Number	Wt.	Replacement Roll
24	D5-R-24-09-4S	31	D5-R-24-09	D6-R-24-09-4S	35	D6-R-24-09
30	D5-R-30-09-4S	37	D5-R-30-09	D6-R-30-09-4S	41	D6-R-30-09
36	D5-R-36-09-4S	42	D5-R-36-09	D6-R-36-09-4S	47	D6-R-36-09
42	D5-R-42-09-4S	47	D5-R-42-09	D6-R-42-09-4S	54	D6-R-42-09
48	D5-R-48-09-4S	52	D5-R-48-09	D6-R-48-09-4S	60	D6-R-48-09
54	D5-R-54-09-4S	58	D5-R-54-09	D6-R-54-09-4S	66	D6-R-54-09
60	D5-R-60-09-4S	63	D5-R-60-09	D6-R-60-09-4S	72	D6-R-60-09
72	D5-R-72-09-4S	74	D5-R-72-09	D6-R-72-09-4S	84	D6-R-72-09

Note: Brackets Also Sold Separately (page N-65).

CEMA D
Rubber Disc Returns

Belt Width	Standard Dimensions		
	A	C	G
24	33	35	27.13
30	39	41	33.13
36	45	47	39.13
42	51	53	45.13
48	57	59	51.13
54	63	65	57.13
60	69	71	63.13
72	81	83	75.13

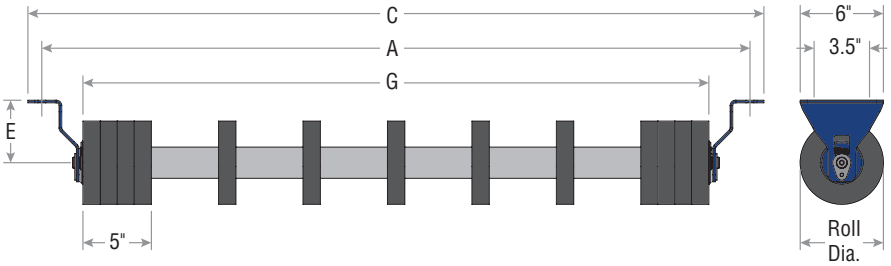

Rubber Disc Returns (E = 1.5")

Belt Width	5" Roll Diameter			6" Roll Diameter		
	Part Number	Wt.	Replacement Roll	Part Number	Wt.	Replacement Roll
24	D5-RRD-24-1	31	D5-RRD-24	D6-RRD-24-1	35	D6-RRD-24
30	D5-RRD-30-1	36	D5-RRD-30	D6-RRD-30-1	41	D6-RRD-30
36	D5-RRD-36-1	42	D5-RRD-36	D6-RRD-36-1	46	D6-RRD-36
42	D5-RRD-42-1	47	D5-RRD-42	D6-RRD-42-1	52	D6-RRD-42
48	D5-RRD-48-1	52	D5-RRD-48	D6-RRD-48-1	58	D6-RRD-48
54	D5-RRD-54-1	58	D5-RRD-54	D6-RRD-54-1	64	D6-RRD-54
60	D5-RRD-60-1	63	D5-RRD-60	D6-RRD-60-1	69	D6-RRD-60
72	D5-RRD-72-1	74	D5-RRD-72	D6-RRD-72-1	81	D6-RRD-72

Rubber Disc Returns (E = 4.5")

Belt Width	5" Roll Diameter			6" Roll Diameter		
	Part Number	Wt.	Replacement Roll	Part Number	Wt.	Replacement Roll
24	D5-RRD-24-4	33	D5-RRD-24	D6-RRD-24-4	37	D6-RRD-24
30	D5-RRD-30-4	38	D5-RRD-30	D6-RRD-30-4	43	D6-RRD-30
36	D5-RRD-36-4	44	D5-RRD-36	D6-RRD-36-4	48	D6-RRD-36
42	D5-RRD-42-4	49	D5-RRD-42	D6-RRD-42-4	54	D6-RRD-42
48	D5-RRD-48-4	54	D5-RRD-48	D6-RRD-48-4	60	D6-RRD-48
54	D5-RRD-54-4	60	D5-RRD-54	D6-RRD-54-4	66	D6-RRD-54
60	D5-RRD-60-4	65	D5-RRD-60	D6-RRD-60-4	71	D6-RRD-60
72	D5-RRD-72-4	76	D5-RRD-72	D6-RRD-72-4	83	D6-RRD-72

Rubber Disc Returns (E = 4.5", Belt Saver)

Belt Width	5" Roll Diameter			6" Roll Diameter		
	Part Number	Wt.	Replacement Roll	Part Number	Wt.	Replacement Roll
24	D5-RRD-24-4S	34	D5-RRD-24	D6-RRD-24-4S	38	D6-RRD-24
30	D5-RRD-30-4S	39	D5-RRD-30	D6-RRD-30-4S	44	D6-RRD-30
36	D5-RRD-36-4S	45	D5-RRD-36	D6-RRD-36-4S	49	D6-RRD-36
42	D5-RRD-42-4S	50	D5-RRD-42	D6-RRD-42-4S	55	D6-RRD-42
48	D5-RRD-48-4S	55	D5-RRD-48	D6-RRD-48-4S	61	D6-RRD-48
54	D5-RRD-54-4S	61	D5-RRD-54	D6-RRD-54-4S	67	D6-RRD-54
60	D5-RRD-60-4S	66	D5-RRD-60	D6-RRD-60-4S	72	D6-RRD-60
72	D5-RRD-72-4S	77	D5-RRD-72	D6-RRD-72-4S	84	D6-RRD-72

Note: Brackets Also Sold Separately (page N-65).

CEMA D
Steel V-Returns

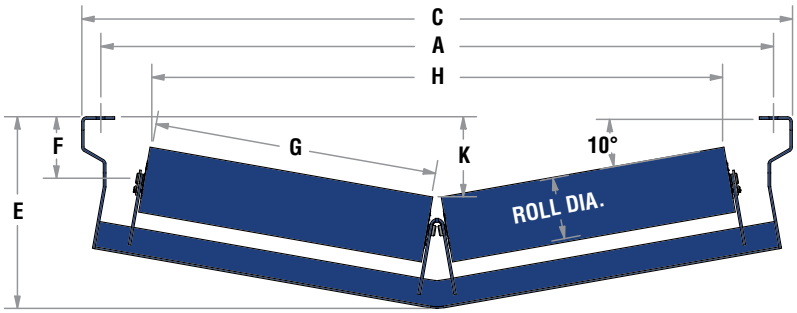

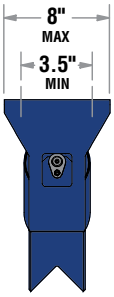

Belt Width	Standard Dimensions		
	A	C	G
24	33	35.88	13.25
30	39	41.88	17.63
36	45	47.88	19.75
42	51	53.88	21.38
48	57	59.88	26.00
54	63	65.88	28.88
60	69	71.88	31.88
72	81	83.88	38.00

Steel V-Returns (F = 4.5")

Belt Width	5" Roll Diameter						6" Roll Diameter					
	Part Number	E	H	K	Wt.	Replacement Roll	Part Number	E	H	K	Wt.	Replacement Roll
24	D5-10V4-24-09	12.94	26.75	4.50	48	D5-T-36-09	D6-10V4-24-09	12.94	26.56	4.00	55	D6-T-36-09
30	D5-10V4-30-09	13.44	35.31	5.00	57	D5-T-48-09	D6-10V4-30-09	13.44	35.19	4.50	65	D6-T-48-09
36	D5-10V4-36-09	14.00	39.50	5.56	64	D5-T-54-09	D6-10V4-36-09	14.00	39.38	5.00	71	D6-T-54-09
42	D5-10V4-42-09	14.50	43.50	6.00	70	D5-T-60-09	D6-10V4-42-09	14.50	43.31	5.38	78	D6-T-60-09
48	D5-10V4-48-09	15.00	51.81	6.63	80	D5-T-72-09	D6-10V4-48-09	15.00	51.69	6.13	88	D6-T-72-09
54	D5-10V4-54-09	15.56	57.50	7.13	87	D5-V-54-09	D6-10V4-54-09	15.56	57.31	6.63	96	D6-V-54-09
60	D5-10V4-60-09	16.13	63.44	7.69	94	D5-V-60-09	D6-10V4-60-09	16.13	63.25	7.19	104	D6-V-60-09
72	D5-10V4-72-09	17.13	75.5	8.75	109	D5-V-72-09	D6-10V4-72-09	17.13	75.25	8.25	120	D6-V-72-09

Steel V-Returns (F =7")

Belt Width	5" Roll Diameter						6" Roll Diameter					
	Part Number	E	H	K	Wt.	Replacement Roll	Part Number	E	H	K	Wt.	Replacement Roll
24	D5-10V7-24-09	15.56	26.75	7.13	52	D5-T-36-09	D6-10V7-24-09	15.56	26.56	6.63	59	D6-T-36-09
30	D5-10V7-30-09	16.06	35.31	7.63	61	D5-T-48-09	D6-10V7-30-09	16.06	35.19	7.13	69	D6-T-48-09
36	D5-10V7-36-09	16.63	39.50	8.19	68	D5-T-54-09	D6-10V7-36-09	16.63	39.38	7.69	75	D6-T-54-09
42	D5-10V7-42-09	17.13	43.50	8.69	74	D5-T-60-09	D6-10V7-42-09	17.13	43.31	8.25	82	D6-T-60-09
48	D5-10V7-48-09	17.69	51.81	9.25	84	D5-T-72-09	D6-10V7-48-09	17.69	51.69	8.75	92	D6-T-72-09
54	D5-10V7-54-09	18.19	57.50	9.75	91	D5-V-54-09	D6-10V7-54-09	18.19	57.31	9.25	100	D6-V-54-09
60	D5-10V7-60-09	18.75	63.44	10.25	98	D5-V-60-09	D6-10V7-60-09	18.75	63.25	9.81	108	D6-V-60-09
72	D5-10V7-72-09	19.94	75.5	11.5	113	D5-V-72-09	D6-10V7-72-09	19.75	75.31	10.88	124	D6-V-72-09

CEMA D
Rubber Disc V-Returns

Belt Width	Standard Dimensions		
	A	C	G
24	33	35.88	13.25
30	39	41.88	15.44
36	45	47.88	17.63
42	51	53.88	21.75
48	57	59.88	23.38
54	63	65.88	27.38
60	69	71.88	30.88
72	81	83.88	37

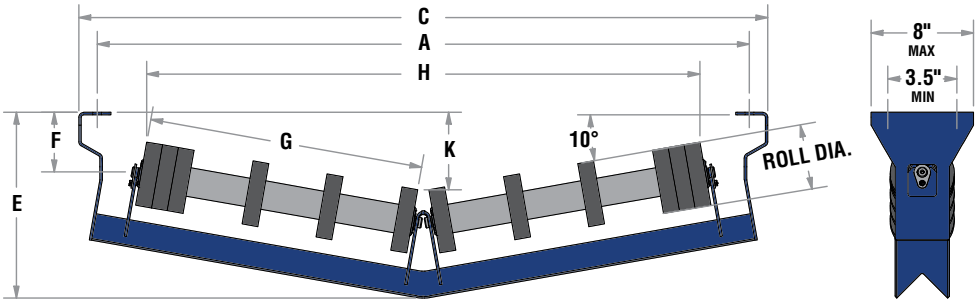

Rubber Disc V-Returns (F = 4.5")

Belt Width	5" Roll Diameter						6" Roll Diameter					
	Part Number	E	H	K	Wt.	Replacement Roll	Part Number	E	H	K	Wt.	Replacement Roll
24	D5-10VRD4-24	12.94	26.75	4.50	46	D5-VRD-24	D6-10VRD4-24	12.94	26.56	4.00	51	D6-VRD-24
30	D5-10VRD4-30	13.44	35.31	5.00	53	D5-VRD-30	D6-10VRD4-30	13.44	35.19	4.50	60	D6-VRD-30
36	D5-10VRD4-36	14.00	39.50	5.56	58	D5-VRD-36	D6-10VRD4-36	14.00	39.38	5.00	66	D6-VRD-36
42	D5-10VRD4-42	14.50	43.50	6.00	63	D5-VRD-42	D6-10VRD4-42	14.50	43.31	5.38	71	D6-VRD-42
48	D5-10VRD4-48	15.00	51.81	6.63	70	D5-VRD-48	D6-10VRD4-48	15.00	51.69	6.13	80	D6-VRD-48
54	D5-10VRD4-54	15.56	57.50	7.13	83	D5-VRD-54	D6-10VRD4-54	15.56	57.31	6.63	90	D6-VRD-54
60	D5-10VRD4-60	16.13	63.44	7.69	90	D5-VRD-60	D6-10VRD4-60	16.13	63.25	7.19	98	D6-VRD-60
72	D5-10VRD4-72	17.13	75.5	8.75	101	D5-VRD-72	D6-10VRD4-72	17.13	75.25	8.25	113	D6-VRD-72

Rubber Disc V-Returns (F =7")

Belt Width	5" Roll Diameter						6" Roll Diameter					
	Part Number	E	H	K	Wt.	Replacement Roll	Part Number	E	H	K	Wt.	Replacement Roll
24	D5-10VRD7-24	15.56	26.75	7.13	50	D5-VRD-24	D6-10VRD7-24	15.56	26.56	6.63	54	D6-VRD-24
30	D5-10VRD7-30	16.06	35.31	7.63	57	D5-VRD-30	D6-10VRD7-30	16.06	35.19	7.13	65	D6-VRD-30
36	D5-10VRD7-36	16.63	39.50	8.19	62	D5-VRD-36	D6-10VRD7-36	16.63	39.38	7.69	70	D6-VRD-36
42	D5-10VRD7-42	17.13	43.50	8.69	67	D5-VRD-42	D6-10VRD7-42	17.13	43.31	8.25	77	D6-VRD-42
48	D5-10VRD7-48	17.69	51.81	9.25	74	D5-VRD-48	D6-10VRD7-48	17.69	51.69	8.75	86	D6-VRD-48
54	D5-10VRD7-54	18.19	57.50	9.75	87	D5-VRD-54	D6-10VRD7-54	18.19	57.31	9.25	94	D6-VRD-54
60	D5-10VRD7-60	18.75	63.44	10.25	94	D5-VRD-60	D6-10VRD7-60	18.75	63.25	9.81	102	D6-VRD-60
72	D5-10VRD7-72	19.94	75.5	11.5	105	D5-VRD-72	D6-10VRD7-72	19.75	75.31	10.88	117	D6-VRD-72

CEMA D
Steel Flat Carry

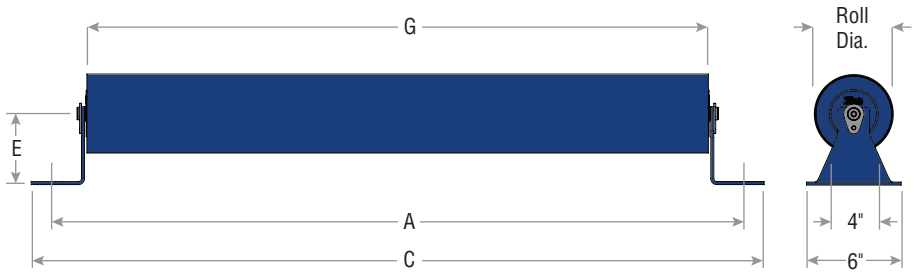

Belt Width	Standard Dimensions		
	A	C	G
24	33	35.44	27.38
30	39	41.44	33.38
36	45	47.44	39.38
42	51	53.44	45.38
48	57	59.44	51.38
54	63	65.44	57.38
60	69	71.44	63.38
72	81	83.44	75.38

Steel Flat Carry (E = 1.5")

Belt Width	5" Roll Diameter			6" Roll Diameter		
	Part Number	Wt.	Replacement Roll	Part Number	Wt.	Replacement Roll
24	D5-F-24-09-1	30	D5-R-24-09	D6-F-24-09-1	34	D6-R-24-09
30	D5-F-30-09-1	36	D5-R-30-09	D6-F-30-09-1	40	D6-R-30-09
36	D5-F-36-09-1	41	D5-R-36-09	D6-F-36-09-1	46	D6-R-36-09
42	D5-F-42-09-1	46	D5-R-42-09	D6-F-42-09-1	53	D6-R-42-09
48	D5-F-48-09-1	51	D5-R-48-09	D6-F-48-09-1	59	D6-R-48-09
54	D5-F-54-09-1	57	D5-R-54-09	D6-F-54-09-1	65	D6-R-54-09
60	D5-F-60-09-1	62	D5-R-60-09	D6-F-60-09-1	71	D6-R-60-09
72	D5-F-72-09-1	73	D5-R-72-09	D6-F-72-09-1	83	D6-R-72-09

Steel Flat Carry (E = 4.5")

Belt Width	5" Roll Diameter			6" Roll Diameter		
	Part Number	Wt.	Replacement Roll	Part Number	Wt.	Replacement Roll
24	D5-F-24-09-4	32	D5-R-24-09	D6-F-24-09-4	36	D6-R-24-09
30	D5-F-30-09-4	38	D5-R-30-09	D6-F-30-09-4	42	D6-R-30-09
36	D5-F-36-09-4	43	D5-R-36-09	D6-F-36-09-4	48	D6-R-36-09
42	D5-F-42-09-4	48	D5-R-42-09	D6-F-42-09-4	55	D6-R-42-09
48	D5-F-48-09-4	53	D5-R-48-09	D6-F-48-09-4	61	D6-R-48-09
54	D5-F-54-09-4	59	D5-R-54-09	D6-F-54-09-4	67	D6-R-54-09
60	D5-F-60-09-4	64	D5-R-60-09	D6-F-60-09-4	73	D6-R-60-09
72	D5-F-72-09-4	75	D5-R-72-09	D6-F-72-09-4	85	D6-R-72-09

Note: Brackets Also Sold Separately (page N-65).

CEMA D
Impact Flat Carry

Belt Width	Standard Dimensions		
	A	C	G
24	33	35.44	27.38
30	39	41.44	33.38
36	45	47.44	39.38
42	51	53.44	45.38
48	57	59.44	51.38
54	63	65.44	57.38
60	69	71.44	63.38
72	81	83.44	75.38

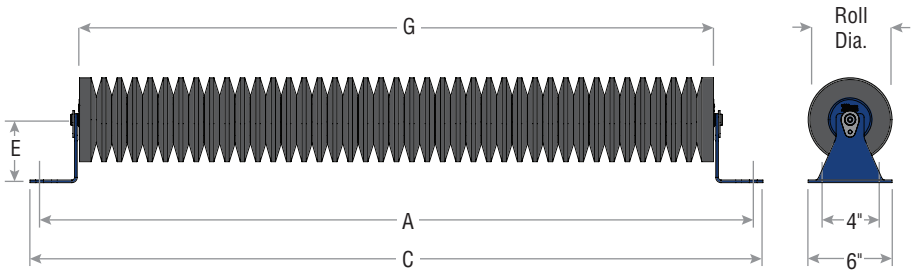

Impact Flat Carry (E = 1.5")

Belt Width	5" Roll Diameter			6" Roll Diameter		
	Part Number	Wt.	Replacement Roll	Part Number	Wt.	Replacement Roll
24	D5-FRD-24-1	37	D5-FRD-24	D6-FRD-24-1	42	D6-FRD-24
30	D5-FRD-30-1	44	D5-FRD-30	D6-FRD-30-1	50	D6-FRD-30
36	D5-FRD-36-1	51	D5-FRD-36	D6-FRD-36-1	58	D6-FRD-36
42	D5-FRD-42-1	58	D5-FRD-42	D6-FRD-42-1	67	D6-FRD-42
48	D5-FRD-48-1	65	D5-FRD-48	D6-FRD-48-1	75	D6-FRD-48
54	D5-FRD-54-1	72	D5-FRD-54	D6-FRD-54-1	83	D6-FRD-54
60	D5-FRD-60-1	79	D5-FRD-60	D6-FRD-60-1	92	D6-FRD-60
72	D5-FRD-72-1	94	D5-FRD-72	D6-FRD-72-1	108	D6-FRD-72

Impact Flat Carry (E = 4.5")

Belt Width	5" Roll Diameter			6" Roll Diameter		
	Part Number	Wt.	Replacement Roll	Part Number	Wt.	Replacement Roll
24	D5-FRD-24-4	39	D5-FRD-24	D6-FRD-24-4	44	D6-FRD-24
30	D5-FRD-30-4	46	D5-FRD-30	D6-FRD-30-4	52	D6-FRD-30
36	D5-FRD-36-4	53	D5-FRD-36	D6-FRD-36-4	60	D6-FRD-36
42	D5-FRD-42-4	60	D5-FRD-42	D6-FRD-42-4	69	D6-FRD-42
48	D5-FRD-48-4	67	D5-FRD-48	D6-FRD-48-4	77	D6-FRD-48
54	D5-FRD-54-4	74	D5-FRD-54	D6-FRD-54-4	85	D6-FRD-54
60	D5-FRD-60-4	81	D5-FRD-60	D6-FRD-60-4	94	D6-FRD-60
72	D5-FRD-72-4	96	D5-FRD-72	D6-FRD-72-4	110	D6-FRD-72

Note: Brackets Also Sold Separately (page N-65).

CEMA D
Equal Steel Idler Self-Aligners

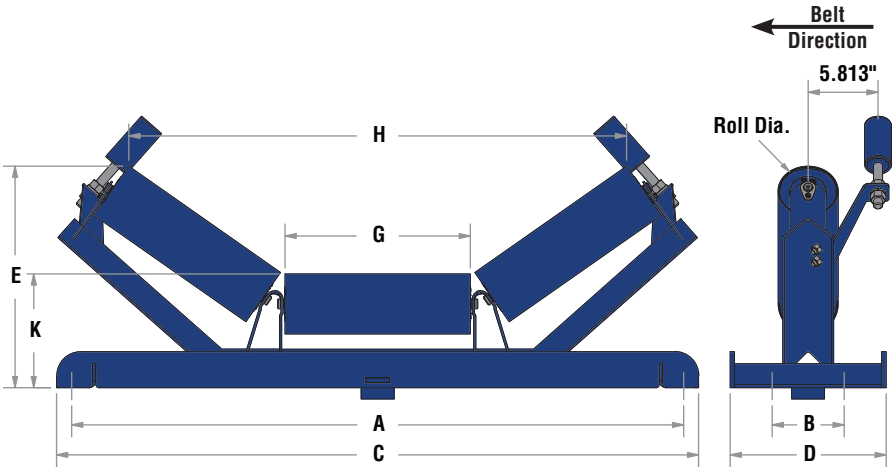

Belt Width	Standard Dimensions					Wide Base	
	A	B	C	D	G	Aw*	Cw*
24	33	3.69	35.5	13	8.94	39	41.5
30	39	3.69	41.5	13	11.13	45	47.5
36	45	3.69	47.5	13	13.25	51	53.5
42	51	3.69	53.5	13	15.44	57	59.5
48	57	3.69	59.5	13	17.63	63	65.5
54	63	3.69	65.5	13	19.75	69	71.5
60	69	3.69	71.5	13	21.75	75	77.5
72	81	3.69	83.5	13	26	87	89.5

*Dimension not shown; for wide base.

20° Equal Steel Idler Self-Aligners

Belt Width	5" Roll Diameter						6" Roll Diameter					
	Part Number	E	H	K	Wt.	Replacement Roll	Part Number	E	H	K	Wt.	Replacement Roll
24	D5-20TSA-24-09	12.69	26.94	9.5	102	D5-T-24-09	D6-20TSA-24-09	13.13	26.56	10	110	D6-T-24-09
30	D5-20TSA-30-09	13.44	33.25	9.5	114	D5-T-30-09	D6-20TSA-30-09	13.88	32.88	10	122	D6-T-30-09
36	D5-20TSA-36-09	14.13	39.31	9.5	128	D5-T-36-09	D6-20TSA-36-09	14.63	39.00	10	135	D6-T-36-09
42	D5-20TSA-42-09	14.88	45.63	9.5	140	D5-T-42-09	D6-20TSA-42-09	15.38	45.31	10	150	D6-T-42-09
48	D5-20TSA-48-09	15.63	51.94	9.5	155	D5-T-48-09	D6-20TSA-48-09	16.13	51.56	10	163	D6-T-48-09
54	D5-20TSA-54-09	16.38	58.06	9.5	166	D5-T-54-09	D6-20TSA-54-09	16.81	57.69	10	178	D6-T-54-09
60	D5-20TSA-60-09	17.06	63.81	9.5	177	D5-T-60-09	D6-20TSA-60-09	17.50	63.44	10	190	D6-T-60-09
72	D5-20TSA-72-09	18.25	76.06	9.5	200	D5-T-72-09	D6-20TSA-72-09	18.94	75.69	10	212	D6-T-72-09

35° Equal Steel Idler Self-Aligners

Belt Width	5" Roll Diameter						6" Roll Diameter					
	Part Number	E	H	K	Wt.	Replacement Roll	Part Number	E	H	K	Wt.	Replacement Roll
24	D5-35TSA-24-09	14.69	24.31	9.5	104	D5-T-24-09	D6-35TSA-24-09	15.13	23.75	10	111	D6-T-24-09
30	D5-35TSA-30-09	16.00	30.13	9.5	116	D5-T-30-09	D6-35TSA-30-09	16.38	29.50	10	123	D6-T-30-09
36	D5-35TSA-36-09	17.19	35.69	9.5	130	D5-T-36-09	D6-35TSA-36-09	17.63	35.13	10	137	D6-T-36-09
42	D5-35TSA-42-09	18.44	41.50	9.5	142	D5-T-42-09	D6-35TSA-42-09	18.88	40.94	10	151	D6-T-42-09
48	D5-35TSA-48-09	19.69	47.25	9.5	157	D5-T-48-09	D6-35TSA-48-09	20.13	46.69	10	165	D6-T-48-09
54	D5-35TSA-54-09	20.98	52.88	9.5	168	D5-T-54-09	D6-35TSA-54-09	21.31	52.31	10	180	D6-T-54-09
60	D5-35TSA-60-09	22.06	58.13	9.5	179	D5-T-60-09	D6-35TSA-60-09	22.50	57.56	10	191	D6-T-60-09
72	D5-35TSA-72-09	24.50	69.38	9.5	203	D5-T-72-09	D6-35TSA-72-09	24.94	68.75	10	215	D6-T-72-09

45° Equal Steel Idler Self-Aligners

Belt Width	5" Roll Diameter						6" Roll Diameter					
	Part Number	E	H	K	Wt.	Replacement Roll	Part Number	E	H	K	Wt.	Replacement Roll
24	D5-45TSA-24-09	16.00	22.50	9.5	105	D5-T-24-09	D6-45TSA-24-09	16.31	21.81	10	113	D6-T-24-09
30	D5-45TSA-30-09	17.56	27.75	9.5	117	D5-T-30-09	D6-45TSA-30-09	17.88	27.06	10	126	D6-T-30-09
36	D5-45TSA-36-09	19.06	32.94	9.5	132	D5-T-36-09	D6-45TSA-36-09	19.38	32.25	10	139	D6-T-36-09
42	D5-45TSA-42-09	20.63	38.25	9.5	143	D5-T-42-09	D6-45TSA-42-09	20.94	37.50	10	154	D6-T-42-09
48	D5-45TSA-48-09	22.13	43.50	9.5	158	D5-T-48-09	D6-45TSA-48-09	22.50	42.75	10	167	D6-T-48-09
54	D5-45TSA-54-09	23.63	48.63	9.5	170	D5-T-54-09	D6-45TSA-54-09	24.00	47.94	10	182	D6-T-54-09
60	D5-45TSA-60-09	25.06	53.38	9.5	179	D5-T-60-09	D6-45TSA-60-09	25.44	52.75	10	194	D6-T-60-09
72	D5-45TSA-72-09	28.00	63.69	9.5	204	D5-T-72-09	D6-45TSA-72-09	28.44	63.00	10	216	D6-T-72-09

Shoe-Type Self-Aligner Available

CEMA D
Steel Return Self-Aligners

Belt Width	Standard Dimensions					Wide Base	
	A	B	C	D	G	Aw*	Cw*
24	33	3.69	36.5	13	8.94	39	42.5
30	39	3.69	42.5	13	11.13	45	48.5
36	45	3.69	48.5	13	13.25	51	54.5
42	51	3.69	54.5	13	15.44	57	60.5
48	57	3.69	60.5	13	17.63	63	66.5
54	63	3.69	66.5	13	19.75	69	72.5
60	69	3.69	72.5	13	21.75	75	78.5
72	81	3.69	84.5	13	26	87	90.5

*Dimension not shown; for wide base.

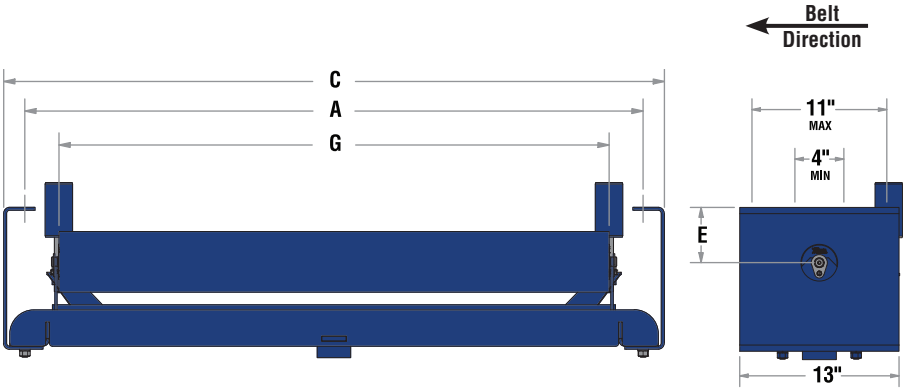

Steel Return Self-Aligners (E = 1.5")

Belt Width	5" Roll Diameter			6" Roll Diameter		
	Part Number	Wt.	Replacement Roll	Part Number	Wt.	Replacement Roll
24	D5-RSA1-24-09	117	D5-R-24-09	D6-RSA1-24-09	121	D6-R-24-09
30	D5-RSA1-30-09	130	D5-R-30-09	D6-RSA1-30-09	135	D6-R-30-09
36	D5-RSA1-36-09	142	D5-R-36-09	D6-RSA1-36-09	146	D6-R-36-09
42	D5-RSA1-42-09	153	D5-R-42-09	D6-RSA1-42-09	158	D6-R-42-09
48	D5-RSA1-48-09	164	D5-R-48-09	D6-RSA1-48-09	171	D6-R-48-09
54	D5-RSA1-54-09	176	D5-R-54-09	D6-RSA1-54-09	184	D6-R-54-09
60	D5-RSA1-60-09	188	D5-R-60-09	D6-RSA1-60-09	196	D6-R-60-09
72	D5-RSA1-72-09	211	D5-R-72-09	D6-RSA1-72-09	221	D6-R-72-09

Steel Return Self-Aligners (E = 4.5")

Belt Width	5" Roll Diameter			6" Roll Diameter		
	Part Number	Wt.	Replacement Roll	Part Number	Wt.	Replacement Roll
24	D5-RSA4-24-09	122	D5-R-24-09	D6-RSA4-24-09	126	D6-R-24-09
30	D5-RSA4-30-09	134	D5-R-30-09	D6-RSA4-30-09	139	D6-R-30-09
36	D5-RSA4-36-09	149	D5-R-36-09	D6-RSA4-36-09	151	D6-R-36-09
42	D5-RSA4-42-09	158	D5-R-42-09	D6-RSA4-42-09	163	D6-R-42-09
48	D5-RSA4-48-09	169	D5-R-48-09	D6-RSA4-48-09	176	D6-R-48-09
54	D5-RSA4-54-09	181	D5-R-54-09	D6-RSA4-54-09	189	D6-R-54-09
60	D5-RSA4-60-09	193	D5-R-60-09	D6-RSA4-60-09	201	D6-R-60-09
72	D5-RSA4-72-09	216	D5-R-72-09	D6-RSA4-72-09	226	D6-R-72-09

Shoe-Type Self-Aligner Available

CEMA D
Rubber Disc Return Self-Aligners

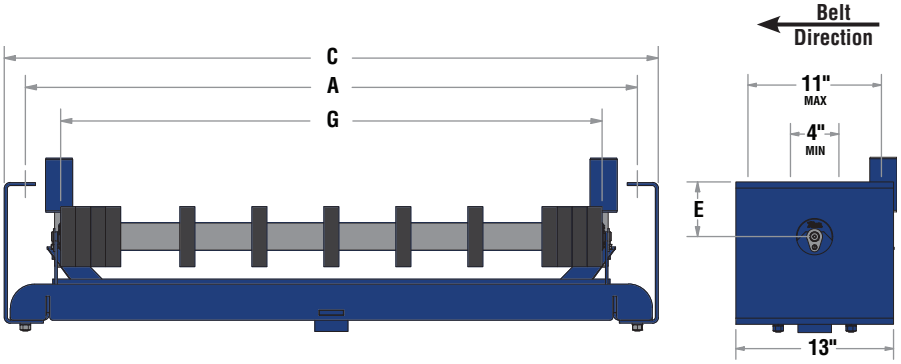

Belt Width	Standard Dimensions					Wide Base	
	A	B	C	D	G	Aw*	Cw*
24	33	3.69	36.5	13	8.94	39	42.5
30	39	3.69	42.5	13	11.13	45	48.5
36	45	3.69	48.5	13	13.25	51	54.5
42	51	3.69	54.5	13	15.44	57	60.5
48	57	3.69	60.5	13	17.63	63	66.5
54	63	3.69	66.5	13	19.75	69	72.5
60	69	3.69	72.5	13	21.75	75	78.5
72	81	3.69	84.5	13	26	87	90.5

*Dimension not shown; for wide base.

Rubber Disc Return Self-Aligners (E = 1.5")

Belt Width	5" Roll Diameter			6" Roll Diameter		
	Part Number	Wt.	Replacement Roll	Part Number	Wt.	Replacement Roll
24	D5-RRDSA1-24	116	D5-RRD-24	D6-RRDSA1-24	120	D6-RRD-24
30	D5-RRDSA1-30	129	D5-RRD-30	D6-RRDSA1-30	134	D6-RRD-30
36	D5-RRDSA1-36	140	D5-RRD-36	D6-RRDSA1-36	143	D6-RRD-36
42	D5-RRDSA1-42	151	D5-RRD-42	D6-RRDSA1-42	155	D6-RRD-42
48	D5-RRDSA1-48	161	D5-RRD-48	D6-RRDSA1-48	167	D6-RRD-48
54	D5-RRDSA1-54	173	D5-RRD-54	D6-RRDSA1-54	180	D6-RRD-54
60	D5-RRDSA1-60	185	D5-RRD-60	D6-RRDSA1-60	192	D6-RRD-60
72	D5-RRDSA1-72	209	D5-RRD-72	D6-RRDSA1-72	217	D6-RRD-72

Rubber Disc Return Self-Aligners (E = 4.5")

Belt Width	5" Roll Diameter			6" Roll Diameter		
	Part Number	Wt.	Replacement Roll	Part Number	Wt.	Replacement Roll
24	D5-RRDSA4-24	121	D5-RRD-24	D6-RRDSA4-24	125	D6-RRD-24
30	D5-RRDSA4-30	133	D5-RRD-30	D6-RRDSA4-30	138	D6-RRD-30
36	D5-RRDSA4-36	147	D5-RRD-36	D6-RRDSA4-36	148	D6-RRD-36
42	D5-RRDSA4-42	156	D5-RRD-42	D6-RRDSA4-42	160	D6-RRD-42
48	D5-RRDSA4-48	166	D5-RRD-48	D6-RRDSA4-48	173	D6-RRD-48
54	D5-RRDSA4-54	178	D5-RRD-54	D6-RRDSA4-54	185	D6-RRD-54
60	D5-RRDSA4-60	190	D5-RRD-60	D6-RRDSA4-60	197	D6-RRD-60
72	D5-RRDSA4-72	213	D5-RRD-72	D6-RRDSA4-72	222	D6-RRD-72

Shoe-Type Self-Aligner Available

CEMA D
Steel Flat Carry Self-Aligners

Belt Width	Standard Dimensions					Wide Base	
	A	B	C	D	G	Aw*	Cw*
24	33	3.69	35.5	13	27.38	39	41.5
30	39	3.69	41.5	13	33.38	45	47.5
36	45	3.69	47.5	13	39.38	51	53.5
42	51	3.69	53.5	13	45.38	57	59.5
48	57	3.69	59.5	13	51.38	63	65.5
54	63	3.69	65.5	13	57.38	69	71.5
60	69	3.69	71.5	13	63.38	75	77.5
72	81	3.69	83.5	13	75.38	87	89.5

*Dimension not shown; for wide base.

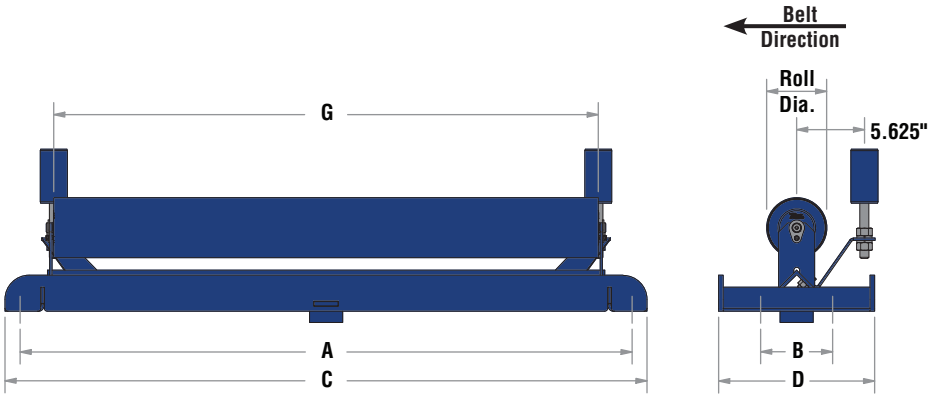

Steel Flat Carry Self-Aligners

Belt Width	5" Roll Diameter			6" Roll Diameter		
	Part Number	Wt.	Replacement Roll	Part Number	Wt.	Replacement Roll
24	D5-FSA-24-09	93	D5-R-24-09	D6-FSA-24-09	97	D6-R-24-09
30	D5-FSA-30-09	106	D5-R-30-09	D6-FSA-30-09	111	D6-R-30-09
36	D5-FSA-36-09	118	D5-R-36-09	D6-FSA-36-09	122	D6-R-36-09
42	D5-FSA-42-09	129	D5-R-42-09	D6-FSA-42-09	134	D6-R-42-09
48	D5-FSA-48-09	140	D5-R-48-09	D6-FSA-48-09	147	D6-R-48-09
54	D5-FSA-54-09	152	D5-R-54-09	D6-FSA-54-09	160	D6-R-54-09
60	D5-FSA-60-09	164	D5-R-60-09	D6-FSA-60-09	172	D6-R-60-09
72	D5-FSA-72-09	187	D5-R-72-09	D6-FSA-72-09	197	D6-R-72-09

Shoe-Type Self-Aligner Available

CEMA D
Live Shaft Rolls

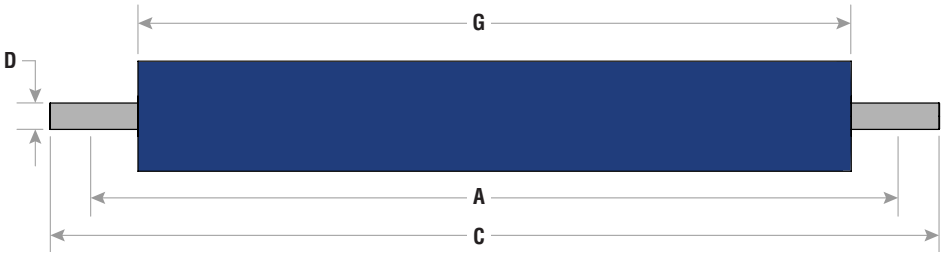

Belt Width	Standard Dimensions		
	A	C	G
24	33	37.75	27.38
30	39	43.75	33.38
36	45	49.75	39.38
42	51	55.75	45.38
48	57	61.75	51.38
54	63	67.75	57.38
60	69	73.75	63.38
72	81	85.75	75.38

Steel Live Shaft Roll

Belt Width	5" Roll Diameter		6" Roll Diameter	
	Part Number	Wt.	Part Number	Wt.
	D = 1.94"		D = 1.94"	
24	D5-LR31-24-09	59	D6-LR31-24-09	64
30	D5-LR31-30-09	71	D6-LR31-30-09	77
36	D5-LR31-36-09	81	D6-LR31-36-09	89
42	D5-LR31-42-09	93	D6-LR31-42-09	101
48	D5-LR31-48-09	103	D6-LR31-48-09	112
54	D5-LR31-54-09	115	D6-LR31-54-09	125
60	D5-LR31-60-09	125	D6-LR31-60-09	136
72	D5-LR31-72-09	148	D6-LR31-72-09	159

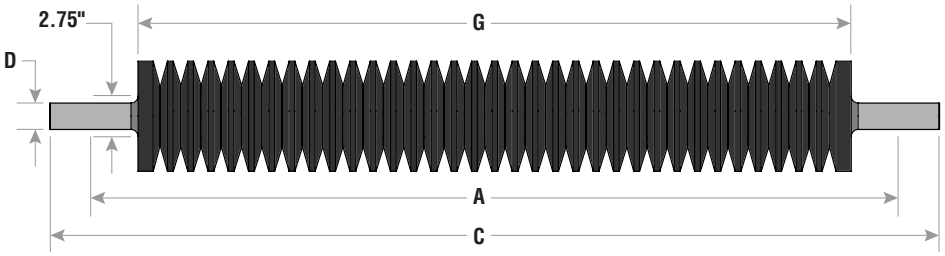

Belt Width	Standard Dimensions		
	A	C	G
24	33	37.75	27.38
30	39	43.75	33.38
36	45	49.75	39.38
42	51	55.75	45.38
48	57	61.75	51.38
54	63	67.75	57.38
60	69	73.75	63.38
72	81	85.75	75.38

Impact Live Shaft Roll

Belt Width	5" Roll Diameter		6" Roll Diameter	
	Part Number	Wt.	Part Number	Wt.
	D = 1.94"		D =1,94"	
24	D5-LI31-24	78	D6-LI31-24	85
30	D5-LI31-30	94	D6-LI31-30	101
36	D5-LI31-36	108	D6-LI31-36	118
42	D5-LI31-42	123	D6-LI31-42	134
48	D5-LI31-48	137	D6-LI31-48	150
54	D5-LI31-54	153	D6-LI31-54	167
60	D5-LI31-60	166	D6-LI31-60	183
72	D5-LI31-72	195	D6-LI31-72	216

CEMA D
Inverted V-Returns

Belt Width	Standard Dimensions		
	A	C	G
24	33	35	13.25
30	39	41	15.44
36	45	47	17.63
42	51	53	21.75
48	57	59	23.38
54	63	65	27.38
60	69	71	30.88
72	81	83	37

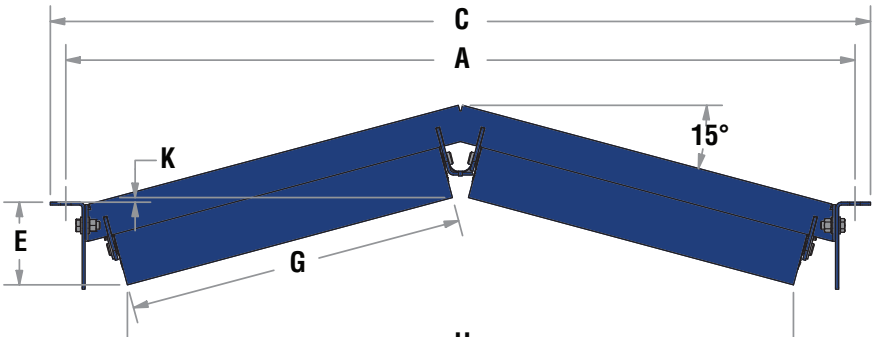

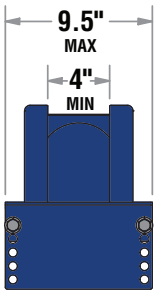

Steel Inverted V-Returns

Belt Width	5" Roll Diameter						6" Roll Diameter					
	Part Number	E	H	K	Wt.	Replacement Rolls	Part Number	E	H	K	Wt.	Replacement Rolls
24	D5-15IV-24-09	5.50	26.63	2.00	55	D5-T-36-09	D6-15IV-24-09	6.00	26.38	2.50	59	D6-T-36-09
30	D5-15IV-30-09	5.25	30.94	1.25	61	D5-T-42-09	D6-15IV-30-09	5.75	30.63	1.75	66	D6-T-42-09
36	D5-15IV-36-09	5.00	35.00	0.44	69	D5-T-48-09	D6-15IV-36-09	5.50	34.81	0.94	74	D6-T-48-09
42	D5-15IV-42-09	5.25	43.00	0.38	78	D5-T-60-09	D6-15IV-42-09	5.75	42.75	0.13	84	D6-T-60-09
48	D5-15IV-48-09	4.88	46.19	1.13	81	D5-R-20-09	D6-15IV-48-09	5.38	45.94	0.69	89	D6-R-20-09
54	D5-15IV-54-09	5.13	53.94	2.00	91	D5-R-24-09	D6-15IV-54-09	5.63	53.69	1.50	99	D6-R-24-09
60	D5-15IV-60-09	5.25	60.69	2.75	100	D5-IV-60-09	D6-15IV-60-09	5.75	60.44	2.25	110	D6-IV-60-09
72	D5-15IV-72-09	5.25	75.5	4.31	116	D5-IV-72-09	D6-15IV-72-09	5.75	72.25	3.81	127	D6-IV-72-09

Belt Width	Standard Dimensions		
	A	C	G
24	33	35	13.25
30	39	41	15.44
36	45	47	17.63
42	51	53	21.75
48	57	59	23.38
54	63	65	27.38
60	69	71	30.88
72	81	83	37

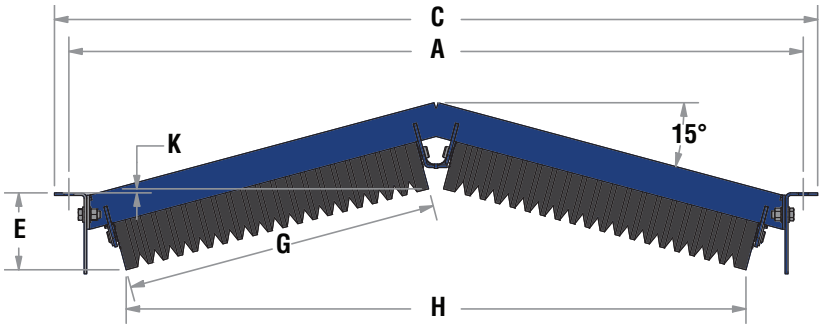

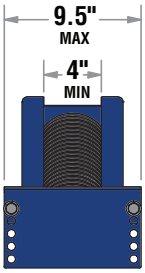

Rubber Disc Inverted V-Returns

Belt Width	5" Roll Diameter						6" Roll Diameter					
	Part Number	E	H	K	Wt.	Replacement Roll	Part Number	E	H	K	Wt.	Replacement Roll
24	D5-15IVRD-24	5.50	26.63	2.00	55	D5-TI-36	D6-15IVRD-24	6.00	26.38	2.50	59	D6-TI-36
30	D5-15IVRD-30	5.25	30.94	1.25	63	D5-TI-42	D6-15IVRD-30	5.75	30.63	1.75	68	D6-TI-42
36	D5-15IVRD-36	5.00	35.00	0.44	72	D5-TI-48	D6-15IVRD-36	5.50	34.81	0.94	78	D6-TI-48
42	D5-15IVRD-42	5.25	43.00	0.38	82	D5-TI-60	D6-15IVRD-42	5.75	42.75	0.13	88	D6-TI-60
48	D5-15IVRD-48	4.88	46.19	1.13	86	D5-FRD-20	D6-15IVRD-48	5.38	45.94	0.69	95	D6-FRD-20
54	D5-15IVRD-54	5.13	53.94	2.00	96	D5-FRD-24	D6-15IVRD-54	5.63	53.69	1.50	106	D6-FRD-24
60	D5-15IVRD-60	5.25	60.69	2.75	107	D5-IVRD-60	D6-15IVRD-60	5.75	60.44	2.25	117	D6-IVRD-60
72	D5-15IVRD-72	5.25	75.5	4.31	124	D5-IVRD-72	D6-15IVRD-72	5.75	72.25	3.81	138	D6-IVRD-72

CEMA E Series
Idler Features & Benefits

The E Series Idler sets a standard for the industry

- Manufactured using sealed for life ball bearings for long maintenance free operation
- Martin Triple Labyrinth Seal guard bearing protection
- Conform to all CEMA E load and dimensional requirements
- Martin Triple Labyrinth Seal Guard offers a balance of seal performance and low rolling resistance
- Protected roll weld

CEMA E Load Ratings

Belt Width	Troughing Angle			Steel Return & Flat	Unequal (Picking)	Live Shaft
	20°	35°	45°			
36	1800	1800	1800	1000	1260	–
42	1800	1800	1800	1000	1200	2100
48	1800	1800	1800	1000	1000	2100
54	1800	1800	1800	925	1000	2100
60	1800	1800	1800	850	1000	2100
66	1800	1800	1800	775	1000	2100
72	1800	1800	1800	700	925	2100
78	–	–	–	625	–	–
84	1800	1674	1620	550	775	1825
90	–	–	–	475	–	–
96	1750	1628	1575	400	625	–
102	–	–	–	250	–	–
Two Steel V-Returns (All)				1300	–	–

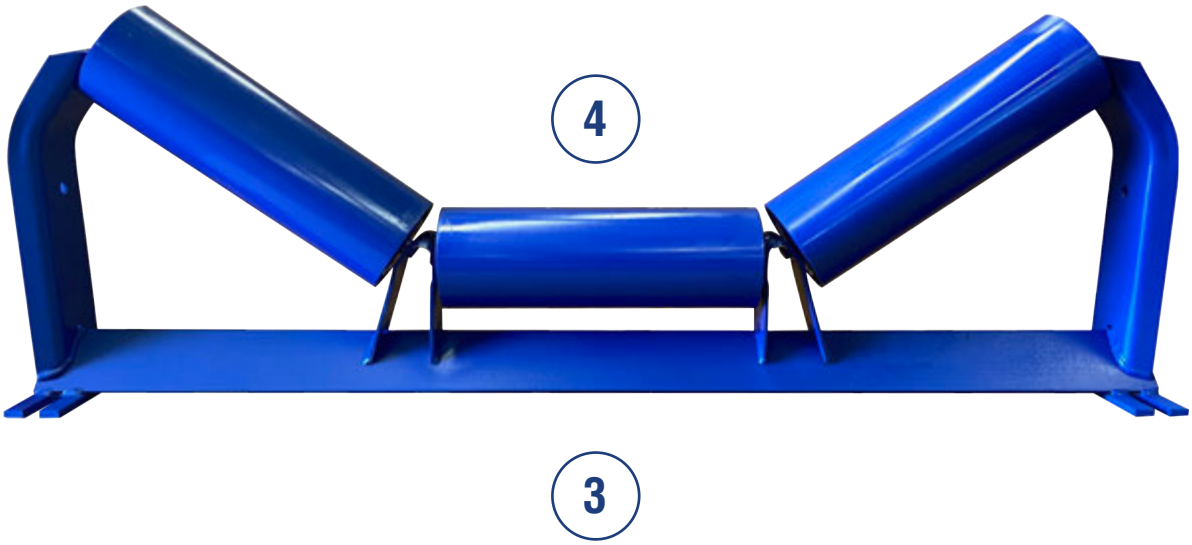

CEMA E Series
Idler Features & Benefits

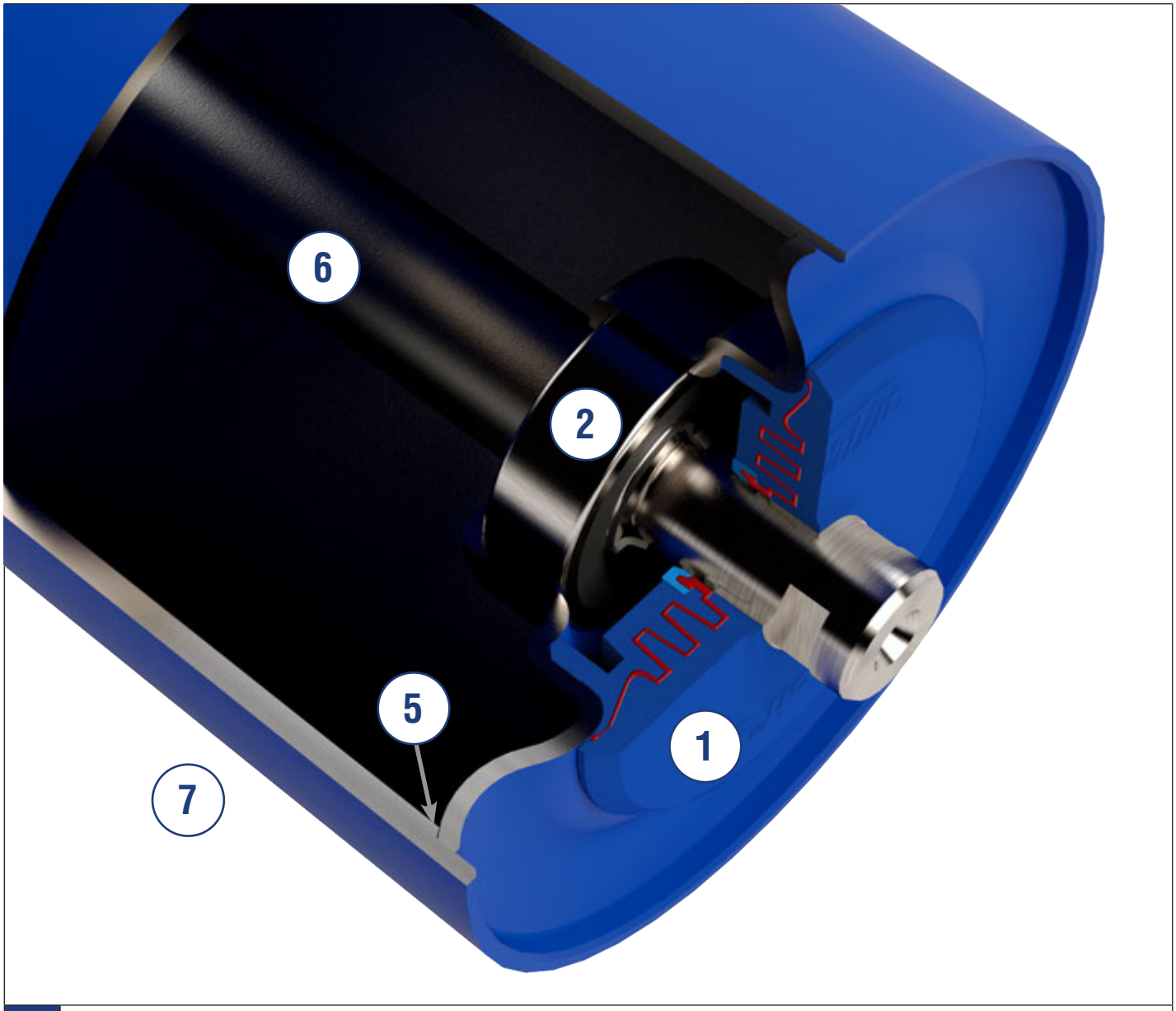

1	Martin Triple Labyrinth Seal design offers the following exclusive Martin bearing protection • External shield deters impurities from entering the bearing housing • Flinger design removes contaminates away from the bearing housing by centrifugal force • Grease is injected into the labyrinth chambers during manufacturing to add an additional layer of protection against bearing contamination • The contact lip seal adds an additional level of protection against moisture & fine particulate contaminants
2	CEMA E Idlers have sealed for life ball bearings.
3	CEMA E Idlers standard product line is 36" to 96" belt widths.
4	Martin CEMA E Idlers offer low rolling resistance that allows for lower operating cost
5	Recessed & protected bearing housing weld protects against wear from belt
6	Oversized, solid steel shaft machined to 40 mm for bearings
7	Martin Idlers have low TIR

CEMA E
Equal Steel Idlers

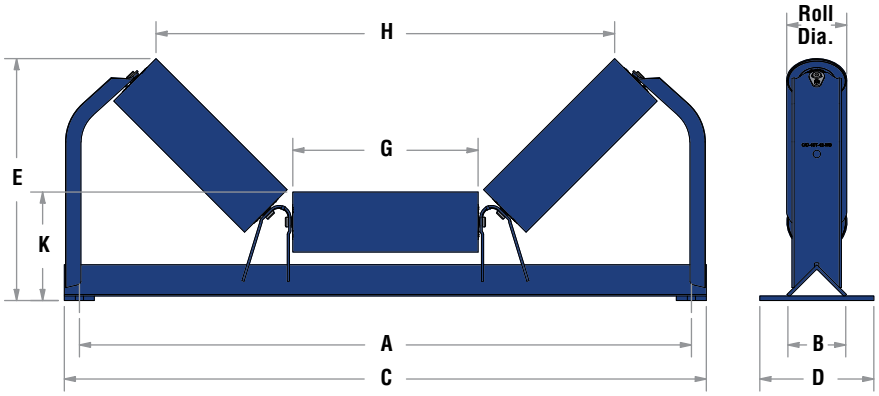

Belt Width	Standard Dimensions					Wide Base	
	A	B	C	D	G	Aw*	Cw*
36	45	7.5	48.5	12	13	51	54.5
42	51	7.5	54.5	12	15	57	62.5
48	57	7.5	62.5	12	17.75	63	68
54	63	7.5	68	12	19.75	69	74
60	69	7.5	74	12	21.75	75	80
66	75	7.5	80	12	23.75	81	85.5
72	81	7.5	85.5	12	25.75	87	91.5
84	93	9	97	14.5	29.75	99	103.5
96	105	9	108.5	14.5	33.75	111	115.5

*Dimension not shown; for wide base.

20º Equal Steel Idlers

Belt Width	6" Roll Diameter						7" Roll Diameter					
	Part Number	E	H	K	Wt.	Replacement Roll	Part Number	E	H	K	Wt.	Replacement Roll
36	E6-20T-36-07	15.38	39.50	10.75	132	E6-T-36-07	E7-20T-36-04	15.81	39.19	11.25	158	E7-T-36-04
42	E6-20T-42-07	16.06	45.25	10.75	145	E6-T-42-07	E7-20T-42-04	16.50	44.94	11.25	173	E7-T-42-04
48	E6-20T-48-07	17.00	53.19	10.75	163	E6-T-48-07	E7-20T-48-04	17.44	52.81	11.25	197	E7-T-48-04
54	E6-20T-54-07	17.69	58.94	10.75	176	E6-T-54-07	E7-20T-54-04	18.13	58.63	11.25	214	E7-T-54-04
60	E6-20T-60-07	18.38	64.69	10.75	190	E6-T-60-07	E7-20T-60-04	18.81	64.38	11.25	231	E7-T-60-04
66	E6-20T-66-07	19.41	70.44	11.50	229	E6-T-66-07	E7-20T-66-04	19.88	70.13	12.00	271	E7-T-66-04
72	E6-20T-72-07	20.44	76.19	11.50	242	E6-T-72-07	E7-20T-72-04	20.94	75.88	12.00	290	E7-T-72-04
84	E6-20T-84-07	21.94	87.75	11.63	275	E6-T-84-07	E7-20T-84-04	22.44	87.38	12.13	331	E7-T-84-04
96	E6-20T-96-07	23.31	99.25	11.63	305	E6-T-96-07	E7-20T-96-04	23.81	98.94	12.13	368	E7-T-96-04

35º Equal Steel Idlers

Belt Width	6" Roll Diameter						7" Roll Diameter					
	Part Number	E	H	K	Wt.	Replacement Roll	Part Number	E	H	K	Wt.	Replacement Roll
36	E6-35T-36-07	18.44	35.63	10.75	136	E6-T-36-07	E7-35T-36-04	18.81	35.06	11.25	161	E7-T-36-04
42	E6-35T-42-07	19.56	40.94	10.75	150	E6-T-42-07	E7-35T-42-04	19.94	40.31	11.25	177	E7-T-42-04
48	E6-35T-48-07	21.13	48.19	10.75	169	E6-T-48-07	E7-35T-48-04	21.56	47.56	11.25	201	E7-T-48-04
54	E6-35T-54-07	22.25	53.44	10.75	182	E6-T-54-07	E7-35T-54-04	22.69	52.88	11.25	218	E7-T-54-04
60	E6-35T-60-07	23.44	58.69	10.75	196	E6-T-60-07	E7-35T-60-04	23.81	58.13	11.25	236	E7-T-60-04
66	E6-35T-66-07	24.94	63.97	11.50	235	E6-T-66-07	E7-35T-66-04	25.34	63.41	12.00	277	E7-T-66-04
72	E6-35T-72-07	26.44	69.25	11.50	250	E6-T-72-07	E7-35T-72-04	26.88	68.69	12.00	296	E7-T-72-04
84	E6-35T-84-07	28.88	79.81	11.63	285	E6-T-84-07	E7-35T-84-04	29.25	79.25	12.13	338	E7-T-84-04
96	E6-35T-96-07	31.19	90.38	11.63	315	E6-T-96-07	E7-35T-96-04	31.56	89.81	12.13	375	E7-T-96-04

45º Equal Steel Idlers

Belt Width	6" Roll Diameter						7" Roll Diameter					
	Part Number	E	H	K	Wt.	Replacement Roll	Part Number	E	H	K	Wt.	Replacement Roll
36	E6-45T-36-07	20.25	32.88	10.75	138	E6-T-36-07	E7-45T-36-04	20.63	32.19	11.25	163	E7-T-36-04
42	E6-45T-42-07	21.69	37.75	10.75	152	E6-T-42-07	E7-45T-42-04	22.00	37.00	11.25	180	E7-T-42-04
48	E6-45T-48-07	23.63	44.38	10.75	171	E6-T-48-07	E7-45T-48-04	24.00	43.69	11.25	204	E7-T-48-04
54	E6-45T-54-07	25.00	49.19	10.75	184	E6-T-54-07	E7-45T-54-04	25.38	48.50	11.25	221	E7-T-54-04
60	E6-45T-60-07	26.44	54.00	10.75	198	E6-T-60-07	E7-45T-60-04	26.81	53.31	11.25	239	E7-T-60-04
66	E6-45T-66-07	28.22	58.84	11.50	237	E6-T-66-07	E7-45T-66-04	28.59	58.16	12.00	279	E7-T-66-04
72	E6-45T-72-07	30.00	63.69	11.50	252	E6-T-72-07	E7-45T-72-04	30.38	63.00	12.00	299	E7-T-72-04
84	E6-45T-84-07	33.00	73.31	11.63	287	E6-T-84-07	E7-45T-84-04	33.31	72.63	12.13	342	E7-T-84-04
96	E6-45T-96-07	35.81	83.00	11.63	318	E6-T-96-07	E7-45T-96-04	36.19	82.31	12.13	379	E7-T-96-04

CEMA E
Equal Impact Idlers

Belt Width	Standard Dimensions					Wide Base	
	A	B	C	D	G	Aw*	Cw*
36	45	7.5	48.5	12	13	51	54.5
42	51	7.5	54.5	12	15	57	62.5
48	57	7.5	62.5	12	17.75	63	68
54	63	7.5	68	12	19.75	69	74
60	69	7.5	74	12	21.75	75	80
66	75	7.5	80	12	23.75	81	85.5
72	81	7.5	85.5	12	25.75	87	91.5
84	93	9	97	14.5	29.75	99	103.5
96	105	9	108.5	14.5	33.75	111	115.5

*Dimension not shown; for wide base.

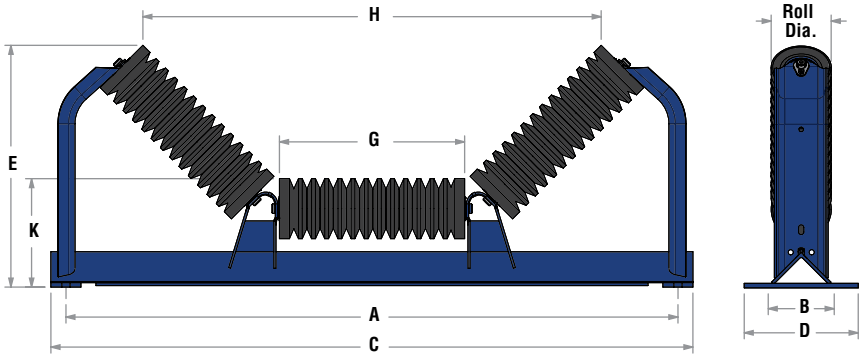

20º Equal Impact Idlers

Belt Width	6" Roll Diameter						7" Roll Diameter					
	Part Number	E	H	K	Wt.	Replacement Roll	Part Number	E	H	K	Wt.	Replacement Roll
36	E6-20TI-36	15.38	39.50	10.75	178	E6-TI-36	E7-20TI-36	15.81	39.19	11.25	188	E7-TI-36
42	E6-20TI-42	16.06	45.25	10.75	198	E6-TI-42	E7-20TI-42	16.50	44.94	11.25	210	E7-TI-42
48	E6-20TI-48	17.00	53.19	10.75	226	E6-TI-48	E7-20TI-48	17.44	52.81	11.25	239	E7-TI-48
54	E6-20TI-54	17.69	58.94	10.75	246	E6-TI-54	E7-20TI-54	18.13	58.63	11.25	260	E7-TI-54
60	E6-20TI-60	18.38	64.69	10.75	268	E6-TI-60	E7-20TI-60	18.81	64.38	11.25	285	E7-TI-60
66	E6-20TI-66	19.41	70.44	11.50	310	E6-TI-66	E7-20TI-66	19.88	70.13	12.00	328	E7-TI-66
72	E6-20TI-72	20.44	76.19	11.50	351	E6-TI-72	E7-20TI-72	20.94	75.88	12.00	370	E7-TI-72
84	E6-20TI-84	21.94	87.75	11.63	404	E6-TI-84	E7-20TI-84	22.44	87.38	12.13	426	E7-TI-84
96	E6-20TI-96	23.31	99.25	11.63	453	E6-TI-96	E7-20TI-96	23.81	98.94	12.13	479	E7-TI-96

35º Equal Impact Idlers

Belt Width	6" Roll Diameter						7" Roll Diameter					
	Part Number	E	H	K	Wt.	Replacement Roll	Part Number	E	H	K	Wt.	Replacement Roll
36	E6-35TI-36	18.44	35.63	10.75	182	E6-TI-36	E7-35TI-36	18.81	35.06	11.25	193	E7-TI-36
42	E6-35TI-42	19.56	40.94	10.75	203	E6-TI-42	E7-35TI-42	19.94	40.31	11.25	215	E7-TI-42
48	E6-35TI-48	21.13	48.19	10.75	231	E6-TI-48	E7-35TI-48	21.56	47.56	11.25	245	E7-TI-48
54	E6-35TI-54	22.25	53.44	10.75	252	E6-TI-54	E7-35TI-54	22.69	52.88	11.25	267	E7-TI-54
60	E6-35TI-60	23.44	58.69	10.75	275	E6-TI-60	E7-35TI-60	23.81	58.13	11.25	292	E7-TI-60
66	E6-35TI-66	24.94	63.97	11.50	317	E6-TI-66	E7-35TI-66	25.34	63.41	12.00	335	E7-TI-66
72	E6-35TI-72	26.44	69.25	11.50	358	E6-TI-72	E7-35TI-72	26.88	68.69	12.00	378	E7-TI-72
84	E6-35TI-84	28.88	79.81	11.63	412	E6-TI-84	E7-35TI-84	29.25	79.25	12.13	435	E7-TI-84
96	E6-35TI-96	31.19	90.38	11.63	461	E6-TI-96	E7-35TI-96	31.56	89.81	12.13	488	E7-TI-96

45º Equal Impact Idlers

Belt Width	6" Roll Diameter						7" Roll Diameter					
	Part Number	E	H	K	Wt.	Replacement Roll	Part Number	E	H	K	Wt.	Replacement Roll
36	E6-45TI-36	20.25	32.88	10.75	186	E6-TI-36	E7-45TI-36	20.63	32.19	11.25	196	E7-TI-36
42	E6-45TI-42	21.69	37.75	10.75	207	E6-TI-42	E7-45TI-42	22.00	37.00	11.25	218	E7-TI-42
48	E6-45TI-48	23.63	44.38	10.75	235	E6-TI-48	E7-45TI-48	24.00	43.69	11.25	249	E7-TI-48
54	E6-45TI-54	25.00	49.19	10.75	256	E6-TI-54	E7-45TI-54	25.38	48.50	11.25	271	E7-TI-54
60	E6-45TI-60	26.44	54.00	10.75	279	E6-TI-60	E7-45TI-60	26.81	53.31	11.25	296	E7-TI-60
66	E6-45TI-66	28.22	58.84	11.50	321	E6-TI-66	E7-45TI-66	28.59	58.16	12.00	340	E7-TI-66
72	E6-45TI-72	30.00	63.69	11.50	363	E6-TI-72	E7-45TI-72	30.38	63.00	12.00	383	E7-TI-72
84	E6-45TI-84	33.00	73.31	11.63	417	E6-TI-84	E7-45TI-84	33.31	72.63	12.13	440	E7-TI-84
96	E6-45TI-96	35.81	83.00	11.63	467	E6-TI-96	E7-45TI-96	36.19	82.31	12.13	494	E7-TI-96

CEMA E
Unequal Steel Idlers

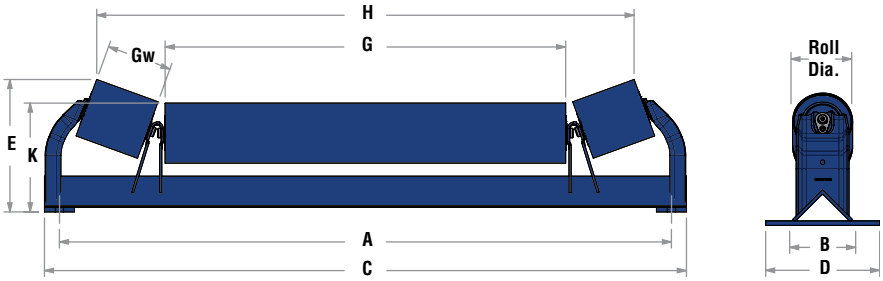

Belt Width	Standard Dimensions				Wide Base	
	A	B	C	D	Aw*	Cw*
36	45	7.5	48.5	12	51	54.5
42	51	7.5	54.5	12	57	62.5
48	57	7.5	62.5	12	63	68
54	63	7.5	68	12	69	74
60	69	7.5	74	12	75	80
66	75	7.5	80	12	81	85.5
72	81	7.5	85.5	12	87	91.5
84	93	9	97	14.5	99	103.5
96	105	9	108.5	14.5	111	115.5

*Dimension not shown; for wide base.

20º Unequal Steel Idlers

Belt Width	G	Gw	6" Roll Diameter						
			Part Number	E	H	K	Wt.	Replacement Center Roll	Replacement Wing Roll
36	21.75	7.5	E6-20U-36-07	13.5	37.94	10.75	128	E6-T-60-07	E6-T-20-07
42	25.75	7.5	E6-20U-42-07	13.5	41.94	10.75	137	E6-T-72-07	
48	33.75	7.5	E6-20U-48-07	13.5	49.94	10.75	155	E6-T-96-07	
54	40	7.5	E6-20U-54-07	13.5	56.19	10.75	167	E6-R-36-07	
60	46	7.5	E6-20U-60-07	13.5	62.19	10.75	180	E6-R-42-07	
66	52	7.5	E6-20U-66-07	14.25	68.19	11.5	218	E6-R-48-07	
72	58	7.5	E6-20U-72-07	14.25	74.19	11.5	232	E6-R-54-07	
84	70	7.5	E6-20U-84-07	14.38	86.19	11.63	261	E6-R-66-07	
96	83.5	7.5	E6-20U-96-07	14.38	99.19	11.63	284	E6-UC-96-07	

Belt Width	G	Gw	7" Roll Diameter						
			Part Number	E	H	K	Wt.	Replacement Center Roll	Replacement Wing Roll
36	21.75	7.5	E7-20U-36-04	13.94	37.5625	11.25	151	E7-T-60-04	E7-T-20-04
42	25.75	7.5	E7-20U-42-04	13.94	41.5625	11.25	163	E7-T-72-04	
48	33.75	7.5	E7-20U-48-04	13.94	49.5625	11.25	185	E7-T-96-04	
54	40	7.5	E7-20U-54-04	13.94	55.8125	11.25	201	E7-R-36-04	
60	46	7.5	E7-20U-60-04	13.94	61.8125	11.25	217	E7-R-42-04	
66	52	7.5	E7-20U-66-04	14.75	67.8125	12	259	E7-R-48-04	
72	58	7.5	E7-20U-72-04	14.75	73.8125	12	275.5	E7-R-54-04	
84	70	7.5	E7-20U-84-04	14.81	85.81	12.13	312	E7-R-66-04	
96	83.5	7.5	E7-20U-96-04	14.81	98.31	12.13	348	E7-UC-96-04	

Split Center Roll Available

CEMA E
Unequal Impact Idlers

Belt Width	Standard Dimensions				Wide Base	
	A	B	C	D	Aw*	Cw*
36	45	7.5	48.5	12	51	54.5
42	51	7.5	54.5	12	57	62.5
48	57	7.5	62.5	12	63	68
54	63	7.5	68	12	69	74
60	69	7.5	74	12	75	80
66	75	7.5	80	12	81	85.5
72	81	7.5	85.5	12	87	91.5
84	93	9	97	14.5	99	103.5
96	105	9	108.5	14.5	111	115.5

*Dimension not shown; for wide base.

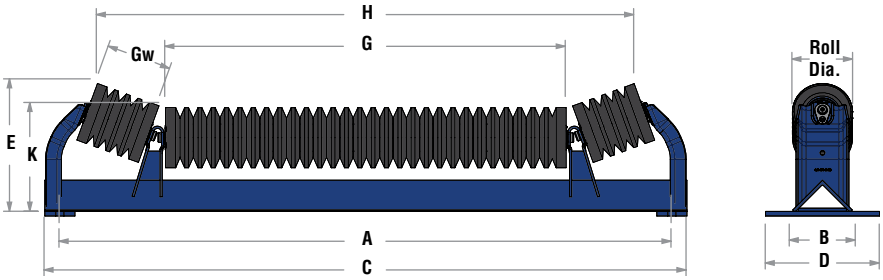

20º Unequal Impact Idlers

Belt Width	G	Gw	6" Roll Diameter						
			Part Number	E	H	K	Wt.	Replacement Center Roll	Replacement Wing Roll
36	21.75	7.5	E6-20UI-36	13.5	37.94	10.75	172	E6-TI-60	E6-TI-20
42	25.75	7.5	E6-20UI-42	13.5	41.94	10.75	188	E6-TI-72	
48	33.75	7.5	E6-20UI-48	13.5	49.94	10.75	214	E6-TI-96	
54	40	7.5	E6-20UI-54	13.5	56.19	10.75	235	E6-FRD-36	
60	46	7.5	E6-20UI-60	13.5	62.19	10.75	255	E6-FRD-42	
66	52	7.5	E6-20UI-66	14.25	68.19	11.5	296.5	E6-FRD-48	
72	58	7.5	E6-20UI-72	14.25	74.19	11.5	338	E6-FRD-54	
84	70	7.5	E6-20UI-84	14.38	86.19	11.63	385	E6-FRD-66	
96	83.5	7.5	E6-20UI-96	14.38	99.19	11.63	423	E6-UIC-96	

Belt Width	G	Gw	7" Roll Diameter						
			Part Number	E	H	K	Wt.	Replacement Center Roll	Replacement Wing Roll
36	21.75	7.5	E7-20UI-36	13.94	37.56	11.25	177	E7-TI-60	E7-TI-20
42	25.75	7.5	E7-20UI-42	13.94	41.56	11.25	194	E7-TI-72	
48	33.75	7.5	E7-20UI-48	13.94	49.56	11.25	223	E7-TI-96	
54	40	7.5	E7-20UI-54	13.94	55.81	11.25	245	E7-FRD-36	
60	46	7.5	E7-20UI-60	13.94	61.81	11.25	267	E7-FRD-42	
66	52	7.5	E7-20UI-66	14.75	67.81	12	310.5	E7-FRD-48	
72	58	7.5	E7-20UI-72	14.75	73.81	12	354	E7-FRD-54	
84	70	7.5	E7-20UI-84	14.81	85.81	12.13	403	E7-FRD-66	
96	83.5	7.5	E7-20UI-96	14.81	98.31	12.13	443	E7-UIC-96	

Split Center Roll Available

CEMA E
Steel Returns

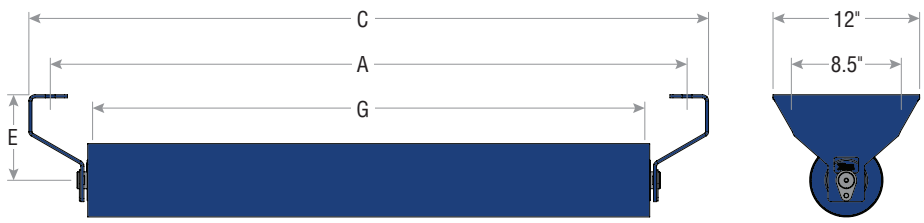

Belt Width	Standard Dimensions		
	A	C	G
36	45	48	40
42	51	54	46
48	57	60	52
54	63	66	58
60	69	72	64
66	75	78	70
72	81	84	76
84	93	96	88
96	105	108	100
102	111	114	106

Steel Returns (E = 4.5", Belt Saver)

Belt Width	6" Roll Diameter			7" Roll Diameter		
	Part Number	Wt.	Replacement Roll	Part Number	Wt.	Replacement Roll
36	E6-R-36-07-4S	63	E6-R-36-07	E7-R-36-04-4S	70	E7-R-36-04
42	E6-R-42-07-4S	71	E6-R-42-07	E7-R-42-04-4S	79	E7-R-42-04
48	E6-R-48-07-4S	79	E6-R-48-07	E7-R-48-04-4S	87	E7-R-48-04
54	E6-R-54-07-4S	86	E6-R-54-07	E7-R-54-04-4S	96	E7-R-54-04
60	E6-R-60-07-4S	94	E6-R-60-07	E7-R-60-04-4S	104	E7-R-60-04
66	E6-R-66-07-4S	101	E6-R-66-07	E7-R-66-04-4S	113	E7-R-66-04
72	E6-R-72-07-4S	109	E6-R-72-07	E7-R-72-04-4S	121	E7-R-72-04
84	E6-R-84-07-4S	124	E6-R-84-07	E7-R-84-04-4S	139	E7-R-84-04
96	E6-R-96-07-4S	139	E6-R-96-07	E7-R-96-04-4S	156	E7-R-96-04
102	E6-R-102-07-4S	147	E6-R-102-07	E7-R-102-04-4S	164	E7-R-102-04

Steel Returns (E = 7", Belt Saver)

Belt Width	6" Roll Diameter			7" Roll Diameter		
	Part Number	Wt.	Replacement Roll	Part Number	Wt.	Replacement Roll
36	E6-R-36-07-7S	68	E6-R-36-07	E7-R-36-04-7S	75	E7-R-36-04
42	E6-R-42-07-7S	76	E6-R-42-07	E7-R-42-04-7S	84	E7-R-42-04
48	E6-R-48-07-7S	83	E6-R-48-07	E7-R-48-04-7S	92	E7-R-48-04
54	E6-R-54-07-7S	91	E6-R-54-07	E7-R-54-04-7S	101	E7-R-54-04
60	E6-R-60-07-7S	99	E6-R-60-07	E7-R-60-04-7S	109	E7-R-60-04
66	E6-R-66-07-7S	106	E6-R-66-07	E7-R-66-04-7S	118	E7-R-66-04
72	E6-R-72-07-7S	114	E6-R-72-07	E7-R-72-04-7S	126	E7-R-72-04
84	E6-R-84-07-7S	129	E6-R-84-07	E7-R-84-04-7S	143	E7-R-84-04
96	E6-R-96-07-7S	144	E6-R-96-07	E7-R-96-04-7S	161	E7-R-96-04
102	E6-R-102-07-7S	152	E6-R-102-07	E7-R-102-04-7S	169	E7-R-102-04

Note: Brackets Also Sold Separately (page N-66).

CEMA E
Rubber Disc Returns

Belt Width	Standard Dimensions		
	A	C	G
36	45	48	40
42	51	54	46
48	57	60	52
54	63	66	58
60	69	72	64
66	75	78	70
72	81	84	76
84	93	96	88
96	105	108	100
102	111	114	106

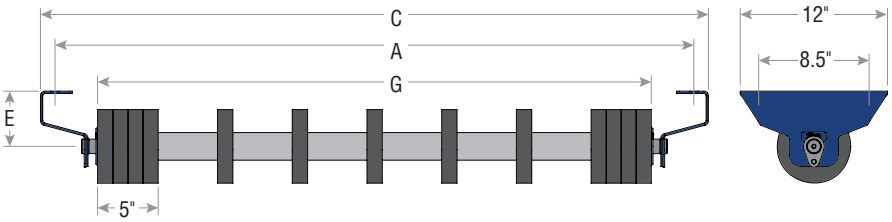

Rubber Disc Returns (E = 4.5" Belt Saver)

Belt Width	6" Roll Diameter			7" Roll Diameter		
	Part Number	Wt.	Replacement Roll	Part Number	Wt.	Replacement Roll
36	E6-RRD-36-4S	59	E6-RRD-36	E7-RRD-36-4S	65	E7-RRD-36
42	E6-RRD-42-4S	66	E6-RRD-42	E7-RRD-42-4S	72	E7-RRD-42
48	E6-RRD-48-4S	73	E6-RRD-48	E7-RRD-48-4S	79	E7-RRD-48
54	E6-RRD-54-4S	80	E6-RRD-54	E7-RRD-54-4S	87	E7-RRD-54
60	E6-RRD-60-4S	87	E6-RRD-60	E7-RRD-60-4S	94	E7-RRD-60
66	E6-RRD-66-4S	93	E6-RRD-66	E7-RRD-66-4S	101	E7-RRD-66
72	E6-RRD-72-4S	100	E6-RRD-72	E7-RRD-72-4S	109	E7-RRD-72
84	E6-RRD-84-4S	114	E6-RRD-84	E7-RRD-84-4S	123	E7-RRD-84
96	E6-RRD-96-4S	128	E6-RRD-96	E7-RRD-96-4S	138	E7-RRD-96
102	E6-RRD-102-4S	135	E6-RRD-102	E7-RRD-102-4S	145	E7-RRD-102

Rubber Disc Returns (E = 7", Belt Saver)

Belt Width	6" Roll Diameter			7" Roll Diameter		
	Part Number	Wt.	Replacement Roll	Part Number	Wt.	Replacement Roll
36	E6-RRD-36-7S	64	E6-RRD-36	E7-RRD-36-7S	69	E7-RRD-36
42	E6-RRD-42-7S	71	E6-RRD-42	E7-RRD-42-7S	77	E7-RRD-42
48	E6-RRD-48-7S	78	E6-RRD-48	E7-RRD-48-7S	84	E7-RRD-48
54	E6-RRD-54-7S	85	E6-RRD-54	E7-RRD-54-7S	91	E7-RRD-54
60	E6-RRD-60-7S	91	E6-RRD-60	E7-RRD-60-7S	99	E7-RRD-60
66	E6-RRD-66-7S	98	E6-RRD-66	E7-RRD-66-7S	106	E7-RRD-66
72	E6-RRD-72-7S	105	E6-RRD-72	E7-RRD-72-7S	113	E7-RRD-72
84	E6-RRD-84-7S	119	E6-RRD-84	E7-RRD-84-7S	128	E7-RRD-84
96	E6-RRD-96-7S	133	E6-RRD-96	E7-RRD-96-7S	143	E7-RRD-96
102	E6-RRD-102-7S	140	E6-RRD-102	E7-RRD-102-7S	150	E7-RRD-102

Note: Brackets Also Sold Separately (page N-65).

CEMA E
V-Returns

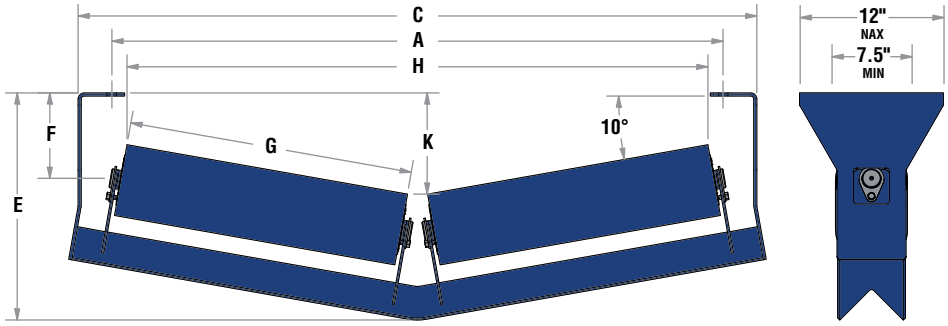

Belt Width	Standard Dimensions		
	A	C	G
36	45	50.63	19.75
42	51	56.63	23.75
48	57	62.63	25.75
54	63	68.63	29.75
60	69	74.63	33.75
66	75	80.63	35.75
72	81	86.63	40
84	93	98.63	46
96	105	110.63	52

Steel V-Returns (F = 7")

Belt Width	6" Roll Diameter						7" Roll Diameter					
	Part Number	E	H	K	Wt.	Replacement Roll	Part Number	E	H	K	Wt.	Replacement Roll
36	E6-10V7-36-07	18.44	40.56	7.94	131	E6-T-54-07	E7-10V7-36-04	18.44	40.44	7.44	154	E7-T-54-04
42	E6-10V7-42-07	18.94	48.44	8.44	147	E6-T-66-07	E7-10V7-42-04	18.94	48.31	7.94	175	E7-T-66-04
48	E6-10V7-48-07	19.44	52.38	8.94	157	E6-T-72-07	E7-10V7-48-04	19.44	52.25	8.50	187	E7-T-72-04
54	E6-10V7-54-07	20	63.06	9.50	173	E6-T-84-07	E7-10V7-54-04	20	60.13	9.00	208	E7-T-84-04
60	E6-10V7-60-07	20.5	68.00	10.00	189	E6-T-96-07	E7-10V7-60-04	20.5	67.88	9.50	229	E7-T-96-04
66	E6-10V7-66-07	21.06	72.00	10.56	199	E6-V-66-07	E7-10V7-66-04	21.06	71.81	10.00	241	E7-V-66-04
72	E6-10V7-72-07	21.56	80.25	11.13	216	E6-R-36-07	E7-10V7-72-04	21.56	80.00	10.63	263	E7-R-36-04
84	E6-10V7-84-07	22.63	92.25	12.13	242	E6-R-42-07	E7-10V7-84-04	22.63	92.13	11.63	296	E7-R-42-04
96	E6-10V7-96-07	23.69	104.00	13.19	268	E6-R-48-07	E7-10V7-96-04	23.69	103.94	12.69	328	E7-R-48-04

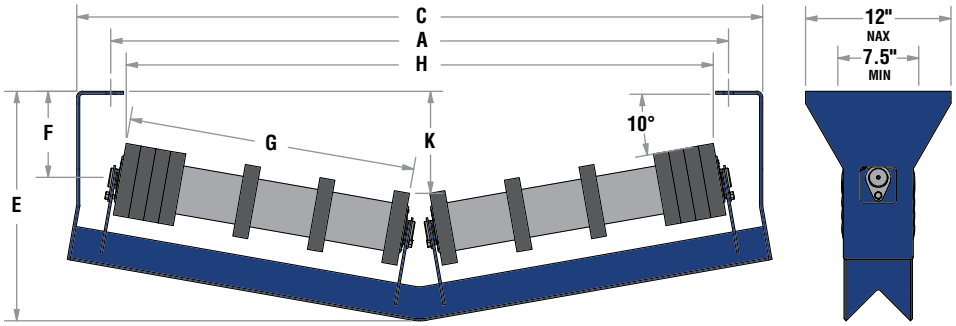

Belt Width	Standard Dimensions		
	A	C	G
36	45	50.63	19.75
42	51	56.63	23.75
48	57	62.63	25.75
54	63	68.63	29.75
60	69	74.63	33.75
66	75	80.63	35.75
72	81	86.63	40
84	93	98.63	46
96	105	110.63	52

Rubber Disc V-Returns (F = 7")

Belt Width	6" Roll Diameter						7" Roll Diameter					
	Part Number	E	H	K	Wt.	Replacement Roll	Part Number	E	H	K	Wt.	Replacement Roll
36	E6-10VRD7-36	18.44	40.56	7.94	135	E6-VRD-36	E7-10VRD7-36	18.44	40.44	7.44	139	E7-VRD-36
42	E6-10VRD7-42	18.94	48.44	8.44	151	E6-VRD-42	E7-10VRD7-42	18.94	48.31	7.94	155	E7-VRD-42
48	E6-10VRD7-48	19.44	52.38	8.94	161	E6-VRD-48	E7-10VRD7-48	19.44	52.25	8.50	167	E7-VRD-48
54	E6-10VRD7-54	20	63.06	9.50	177	E6-VRD-54	E7-10VRD7-54	20	60.13	9.00	181	E7-VRD-54
60	E6-10VRD7-60	20.5	68.00	10.00	193	E6-VRD-60	E7-10VRD7-60	20.5	67.88	9.50	203	E7-VRD-60
66	E6-10VRD7-66	21.06	72.00	10.56	207	E6-VRD-66	E7-10VRD7-66	21.06	71.81	10.00	215	E7-VRD-66
72	E6-10VRD7-72	21.56	80.25	11.13	229	E6-VRD-72	E7-10VRD7-72	21.56	80.00	10.63	242	E7-VRD-72
84	E6-10VRD7-84	22.63	92.25	12.13	257	E6-VRD-84	E7-10VRD7-84	22.63	92.13	11.63	270	E7-VRD-84
96	E6-10VRD7-96	23.69	104.00	13.19	279	E6-VRD-96	E7-10VRD7-96	23.69	103.94	12.69	298	E7-VRD-96

CEMA E
Flat Carry

Belt Width	Standard Dimensions		
	A	C	G
36	45	47.5	40
42	51	53.5	46
48	57	59.5	52
54	63	65.5	58
60	69	71.5	64
66	75	77.5	70
72	81	83.5	76
84	93	95.5	88
96	105	107.5	100
102	111	113.5	106

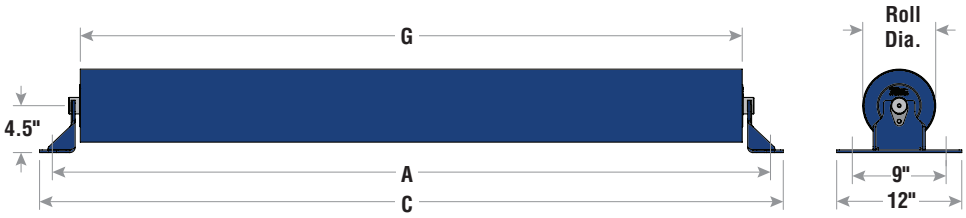

Steel Flat Carry (E = 4.5")

Belt Width	6" Roll Diameter			7" Roll Diameter		
	Part Number	Wt.	Replacement Roll	Part Number	Wt.	Replacement Roll
36	E6-F-36-07-4	83	E6-R-36-07	E7-F-36-04-4	106	E7-R-36-04
42	E6-F-42-07-4	92	E6-R-42-07	E7-F-42-04-4	120	E7-R-42-04
48	E6-F-48-07-4	102	E6-R-48-07	E7-F-48-04-4	133	E7-R-48-04
54	E6-F-54-07-4	112	E6-R-54-07	E7-F-54-04-4	146	E7-R-54-04
60	E6-F-60-07-4	121	E6-R-60-07	E7-F-60-04-4	159	E7-R-60-04
66	E6-F-66-07-4	131	E6-R-66-07	E7-F-66-04-4	172	E7-R-66-04
72	E6-F-72-07-4	141	E6-R-72-07	E7-F-72-04-4	185	E7-R-72-04
84	E6-F-84-07-4	160	E6-R-84-07	E7-F-84-04-4	211	E7-R-84-04
96	E6-F-96-07-4	179	E6-R-96-07	E7-F-96-04-4	237	E7-R-96-04
102	E6-F-102-07-4	189	E6-R-102-07	E7-F-102-04-4	251	E7-R-102-04

Note: Brackets Also Sold Separately (page N-65).

Belt Width	Standard Dimensions		
	A	C	G
36	45	47.5	40
42	51	53.5	46
48	57	59.5	52
54	63	65.5	58
60	69	71.5	64
66	75	77.5	70
72	81	83.5	76
84	93	95.5	88
96	105	107.5	100
102	111	113.5	106

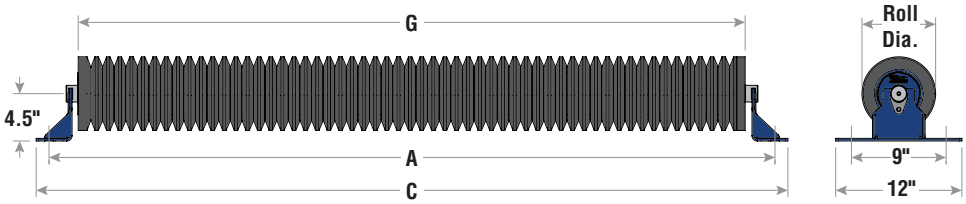

Impact Flat Carry (E = 4.5")

Belt Width	6" Roll Diameter			7" Roll Diameter		
	Part Number	Wt.	Replacement Roll	Part Number	Wt.	Replacement Roll
36	E6-FRD-36-4	92	E6-FRD-36	E7-FRD-36-4	103	E7-FRD-36
42	E6-FRD-42-4	104	E6-FRD-42	E7-FRD-42-4	116	E7-FRD-42
48	E6-FRD-48-4	116	E6-FRD-48	E7-FRD-48-4	129	E7-FRD-48
54	E6-FRD-54-4	127	E6-FRD-54	E7-FRD-54-4	142	E7-FRD-54
60	E6-FRD-60-4	134	E6-FRD-60	E7-FRD-60-4	155	E7-FRD-60
66	E6-FRD-66-4	150	E6-FRD-66	E7-FRD-66-4	169	E7-FRD-66
72	E6-FRD-72-4	162	E6-FRD-72	E7-FRD-72-4	182	E7-FRD-72
84	E6-FRD-84-4	185	E6-FRD-84	E7-FRD-84-4	208	E7-FRD-84
96	E6-FRD-96-4	208	E6-FRD-96	E7-FRD-96-4	234	E7-FRD-96
102	E6-FRD-102-4	220	E6-FRD-102	E7-FRD-102-4	248	E7-FRD-102

Note: Brackets Included.

CEMA E
Equal Steel Idler Self-Aligners

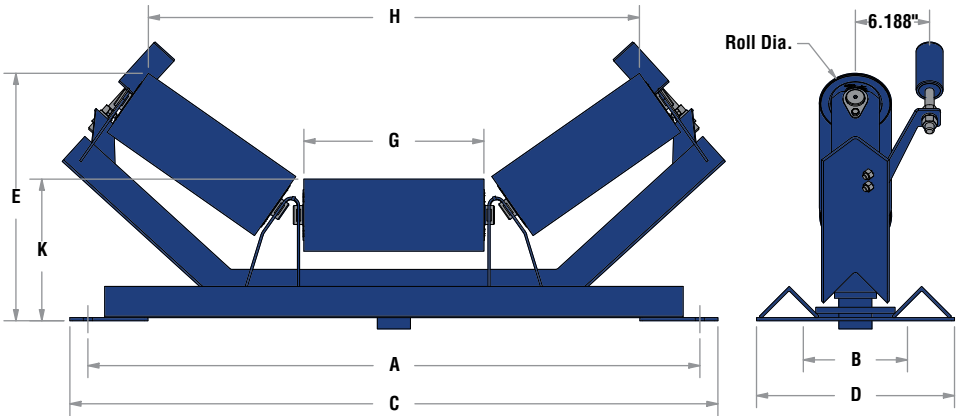

Belt Width	Standard Dimensions					Wide Base	
	A	B	C	D	G	Aw*	Cw*
36	45	9.5	48	16.5	13	51	54
42	51	9.5	54	16.5	15	57	60
48	57	9.5	60	16.5	17.75	63	66
54	63	9.5	66	16.5	19.75	69	72
60	69	9.5	72	16.5	21.75	75	78
66	75	9.5	78	16.5	23.75	81	84
72	81	9.5	84	16.5	25.75	87	90
84	93	9.5	96	21.5	29.75	99	102
96	105	9.5	108	21.5	33.75	111	114

*Dimension not shown; for wide base.

20° Equal Steel Idler Self-Aligners

Belt Width	6" Roll Diameter						7" Roll Diameter					
	Part Number	E	H	K	Wt.	Replacement Roll	Part Number	E	H	K	Wt.	Replacement Roll
36	E6-20TSA-36-07	16.44	39.50	11.75	196	E6-T-36-07	E7-20TSA-36-04	16.88	39.19	12.25	220	E7-T-36-04
42	E6-20TSA-42-07	17.13	45.25	11.75	214	E6-T-42-07	E7-20TSA-42-04	17.56	44.94	12.25	241	E7-T-42-04
48	E6-20TSA-48-07	18.06	53.19	11.75	238	E6-T-48-07	E7-20TSA-48-04	18.50	52.81	12.25	269	E7-T-48-04
54	E6-20TSA-54-07	18.75	58.94	11.75	256	E6-T-54-07	E7-20TSA-54-04	19.19	58.63	12.25	292	E7-T-54-04
60	E6-20TSA-60-07	19.44	64.69	11.75	275	E6-T-60-07	E7-20TSA-60-04	19.88	64.38	12.25	314	E7-T-60-04
66	E6-20TSA-66-07	20.38	70.44	12.06	294	E6-T-66-07	E7-20TSA-66-04	20.81	70.13	12.56	336	E7-T-66-04
72	E6-20TSA-72-07	21.06	76.19	12.06	312	E6-T-72-07	E7-20TSA-72-04	21.50	75.88	12.56	357	E7-T-72-04
84	E6-20TSA-84-07	22.63	87.75	12.25	423	E6-T-84-07	E7-20TSA-84-04	23.06	87.38	12.75	475	E7-T-84-04
96	E6-20TSA-96-07	23.94	99.25	12.25	469	E6-T-96-07	E7-20TSA-96-04	24.44	98.94	12.75	528	E7-T-96-04

35° Equal Steel Idler Self-Aligners

Belt Width	6" Roll Diameter						7" Roll Diameter					
	Part Number	E	H	K	Wt.	Replacement Roll	Part Number	E	H	K	Wt.	Replacement Roll
36	E6-35TSA-36-07	19.44	35.63	11.75	199	E6-T-36-07	E7-35TSA-36-04	19.88	35.06	12.25	223	E7-T-36-04
42	E6-35TSA-42-07	20.63	40.94	11.75	217	E6-T-42-07	E7-35TSA-42-04	21.00	40.31	12.25	244	E7-T-42-04
48	E6-35TSA-48-07	22.19	48.19	11.75	241	E6-T-48-07	E7-35TSA-48-04	22.63	47.56	12.25	272	E7-T-48-04
54	E6-35TSA-54-07	23.31	53.44	11.75	259	E6-T-54-07	E7-35TSA-54-04	23.75	52.88	12.25	295	E7-T-54-04
60	E6-35TSA-60-07	24.50	58.69	11.75	278	E6-T-60-07	E7-35TSA-60-04	24.88	58.13	12.25	317	E7-T-60-04
66	E6-35TSA-66-07	25.88	64.00	12.06	297	E6-T-66-07	E7-35TSA-66-04	26.31	63.44	12.56	339	E7-T-66-04
72	E6-35TSA-72-07	27.00	69.25	12.06	315	E6-T-72-07	E7-35TSA-72-04	27.44	68.69	12.56	360	E7-T-72-04
84	E6-35TSA-84-07	29.50	79.81	12.25	426	E6-T-84-07	E7-35TSA-84-04	29.94	79.25	12.75	478	E7-T-84-04
96	E6-35TSA-96-07	31.81	90.38	12.25	472	E6-T-96-07	E7-35TSA-96-04	32.19	89.81	12.75	531	E7-T-96-04

45° Equal Steel Idler Self-Aligners

Belt Width	6" Roll Diameter						7" Roll Diameter					
	Part Number	E	H	K	Wt.	Replacement Roll	Part Number	E	H	K	Wt.	Replacement Roll
36	E6-45TSA-36-07	21.31	32.88	11.75	203	E6-T-36-07	E7-45TSA-36-04	21.69	32.19	12.25	227	E7-T-36-04
42	E6-45TSA-42-07	22.75	37.75	11.75	221	E6-T-42-07	E7-45TSA-42-04	23.06	37.00	12.25	248	E7-T-42-04
48	E6-45TSA-48-07	24.69	44.38	11.75	245	E6-T-48-07	E7-45TSA-48-04	25.06	43.69	12.25	276	E7-T-48-04
54	E6-45TSA-54-07	26.13	49.19	11.75	263	E6-T-54-07	E7-45TSA-54-04	26.44	48.50	12.25	299	E7-T-54-04
60	E6-45TSA-60-07	27.50	54.00	11.75	282	E6-T-60-07	E7-45TSA-60-04	27.88	53.31	12.25	321	E7-T-60-04
66	E6-45TSA-66-07	29.19	58.88	12.06	301	E6-T-66-07	E7-45TSA-66-04	29.50	58.13	12.56	343	E7-T-66-04
72	E6-45TSA-72-07	30.56	63.69	12.06	319	E6-T-72-07	E7-45TSA-72-04	30.94	63.00	12.56	364	E7-T-72-04
84	E6-45TSA-84-07	33.63	73.31	12.25	430	E6-T-84-07	E7-45TSA-84-04	31.94	72.63	12.75	482	E7-T-84-04
96	E6-45TSA-96-07	36.44	83.00	12.25	476	E6-T-96-07	E7-45TSA-96-04	36.81	82.31	12.75	535	E7-T-96-04

Shoe-Type Self-Aligner Available

CEMA E
Return Self-Aligners

Belt Width	Standard Dimensions				Wide Base	
	A	B	C	G	Aw*	Cw*
36	45	16.5	49	40	51	55
42	51	16.5	55	46	57	61
48	57	16.5	61	52	63	67
54	63	16.5	67	58	69	73
60	69	16.5	73	64	75	79
66	75	16.5	79	70	81	85
72	81	16.5	85	76	87	91
84	93	21.5	97	88	99	103
96	105	21.5	109	100	111	115

*Dimension not shown; for wide base.

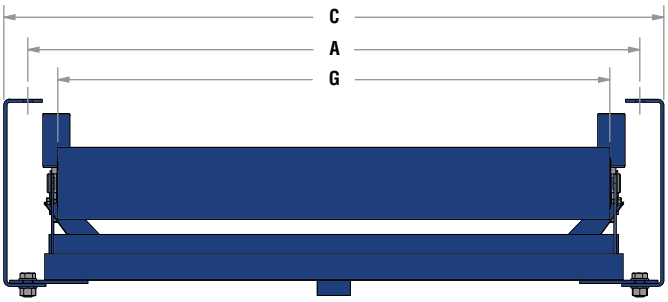

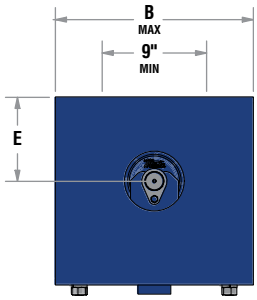

Steel Return Self-Aligners (E = 7")

Belt Width	6" Roll Diameter			7" Roll Diameter		
	Part Number	Wt.	Replacement Roll	Part Number	Wt.	Replacement Roll
36	E6-RSA7-36-07	197	E6-R-36-07	E7-RSA7-36-04	221	E7-R-36-04
42	E6-RSA7-42-07	213	E6-R-42-07	E7-RSA7-42-04	240	E7-R-42-04
48	E6-RSA7-48-07	228	E6-R-48-07	E7-RSA7-48-04	258	E7-R-48-04
54	E6-RSA7-54-07	243	E6-R-54-07	E7-RSA7-54-04	277	E7-R-54-04
60	E6-RSA7-60-07	258	E6-R-60-07	E7-RSA7-60-04	295	E7-R-60-04
66	E6-RSA7-66-07	273	E6-R-66-07	E7-RSA7-66-04	314	E7-R-66-04
72	E6-RSA7-72-07	289	E6-R-72-07	E7-RSA7-72-04	333	E7-R-72-04
84	E6-RSA7-84-07	365	E6-R-84-07	E7-RSA7-84-04	416	E7-R-84-04
96	E6-RSA7-96-07	398	E6-R-96-07	E7-RSA7-96-04	456	E7-R-96-04

Shoe-Type Self-Aligner Available for Reversing Belts

Belt Width	Standard Dimensions				Wide Base	
	A	B	C	G	Aw*	Cw*
36	45	16.5	49	40	51	55
42	51	16.5	55	46	57	61
48	57	16.5	61	52	63	67
54	63	16.5	67	58	69	73
60	69	16.5	73	64	75	79
66	75	16.5	79	70	81	85
72	81	16.5	85	76	87	91
84	93	21.5	97	88	99	103
96	105	21.5	109	100	111	115

*Dimension not shown; for wide base.

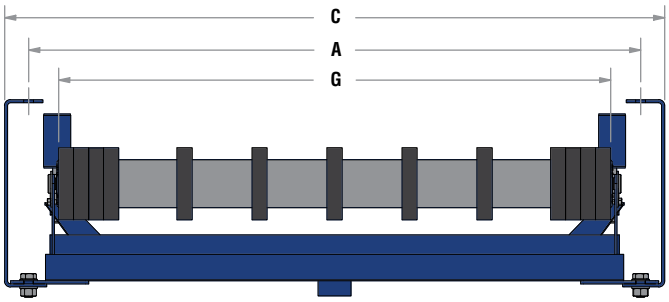

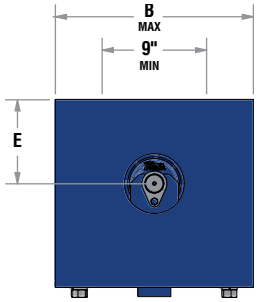

Rubber Disc Return Self-Aligners (E = 7")

Belt Width	6" Roll Diameter			7" Roll Diameter		
	Part Number	Wt.	Replacement Roll	Part Number	Wt.	Replacement Roll
36	E6-RRDSA7-36	205	E6-RRD-36	E7-RRDSA7-36	229	E7-RRD-36
42	E6-RRDSA7-42	221	E6-RRD-42	E7-RRDSA7-42	248	E7-RRD-42
48	E6-RRDSA7-48	236	E6-RRD-48	E7-RRDSA7-48	264	E7-RRD-48
54	E6-RRDSA7-54	256	E6-RRD-54	E7-RRDSA7-54	290	E7-RRD-54
60	E6-RRDSA7-60	271	E6-RRD-60	E7-RRDSA7-60	308	E7-RRD-60
66	E6-RRDSA7-66	286	E6-RRD-66	E7-RRDSA7-66	327	E7-RRD-66
72	E6-RRDSA7-72	306	E6-RRD-72	E7-RRDSA7-72	350	E7-RRD-72
84	E6-RRDSA7-84	382	E6-RRD-84	E7-RRDSA7-84	433	E7-RRD-84
96	E6-RRDSA7-96	415	E6-RRD-96	E7-RRDSA7-96	473	E7-RRD-96

Shoe-Type Self-Aligner Available

CEMA E
Live Shaft Rolls

Belt Width	Standard Dimensions		
	A	C	G
36	45	50	40
42	51	56	46
48	57	62	52
54	63	68	58
60	69	74	64
66	75	80	70
72	81	86	76
78	87	92	82
84	93	98	88
90	99	104	94
96	105	110	100
102	111	116	106

Steel Live Shaft Roll

Belt Width	6" Roll Diameter		7" Roll Diameter	
	Part Number D = 2.44"	Wt.	Part Number D = 2.44"	Wt.
36	E6-LR39-36-07	112	E7-LR39-36-04	126
42	E6-LR39-42-07	126	E7-LR39-42-04	141
48	E6-LR39-48-07	140	E7-LR39-48-04	157
54	E6-LR39-54-07	154	E7-LR39-54-04	172
60	E6-LR39-60-07	168	E7-LR39-60-04	194
66	E6-LR39-66-07	181	E7-LR39-66-04	202
72	E6-LR39-72-07	194	E7-LR39-72-04	218
78	E6-LR39-78-07	208	E7-LR39-78-04	234
84	E6-LR39-84-07	222	E7-LR39-84-04	249
90	E6-LR39-90-07	235	E7-LR39-90-04	263
96	E6-LR39-96-07	249	E7-LR39-96-04	279
102	E6-LR39-102-07	263	E7-LR39-102-04	295

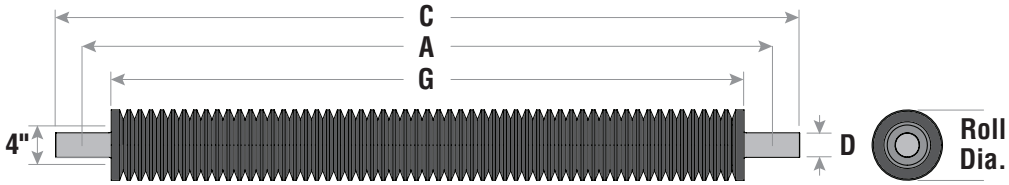

Impact Live Shaft Roll

Belt Width	6" Roll Diameter		7" Roll Diameter	
	Part Number D = 2.44"	Wt.	Part Number D = 2.44"	Wt.
36	E6-LI39-36	207	E7-LI39-36	210
42	E6-LI39-42	233	E7-LI39-42	235
48	E6-LI39-48	258	E7-LI39-48	262
54	E6-LI39-54	283	E7-LI39-54	286
60	E6-LI39-60	309	E7-LI39-60	323
66	E6-LI39-66	333	E7-LI39-66	337
72	E6-LI39-72	358	E7-LI39-72	363
78	E6-LI39-78	384	E7-LI39-78	389
84	E6-LI39-84	409	E7-LI39-84	414
90	E6-LI39-90	434	E7-LI39-90	439
96	E6-LI39-96	459	E7-LI39-96	465
102	E6-LI39-102	485	E7-LI39-102	492

CEMA E
Live Shaft Rolls

Belt Width	Standard Dimensions		
	A	C	G
36	45	50	40
42	51	56	46
48	57	62	52
54	63	68	58
60	69	74	64
66	75	80	70
72	81	86	76
78	87	92	82
84	93	98	88
90	99	104	94
96	105	110	100
102	111	116	106

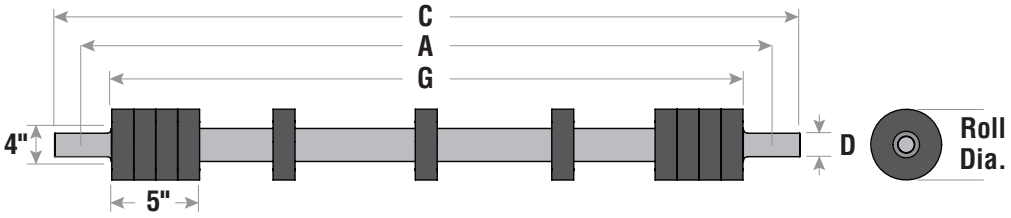

Rubber Disc Return Live Shaft Roll

Belt Width	6" Roll Diameter		7" Roll Diameter	
	Part Number D = 2.44"	Wt.	Part Number D = 2.44"	Wt.
36	E6-LRRD39-36	207	E7-LRRD39-36	210
42	E6-LRRD39-42	233	E7-LRRD39-42	235
48	E6-LRRD39-48	258	E7-LRRD39-48	262
54	E6-LRRD39-54	283	E7-LRRD39-54	286
60	E6-LRRD39-60	309	E7-LRRD39-60	323
66	E6-LRRD39-66	333	E7-LRRD39-66	337
72	E6-LRRD39-72	358	E7-LRRD39-72	363
78	E6-LRRD39-78	384	E7-LRRD39-78	389
84	E6-LRRD39-84	409	E7-LRRD39-84	414
90	E6-LRRD39-90	434	E7-LRRD39-90	439
96	E6-LRRD39-96	459	E7-LRRD39-96	465
102	E6-LRRD39-102	485	E7-LRRD39-102	492

CEMA E
Inverted V-Returns

Belt Width	Standard Dimensions		
	A	C	G
36	45	48.25	19.75
42	51	54.25	21.75
48	57	60.25	25.75
54	63	66.25	29.75
60	69	72.25	31.75
66	75	78.25	35.75
72	81	84.25	37.25
84	93	96.25	43.75
96	105	108.25	49.75

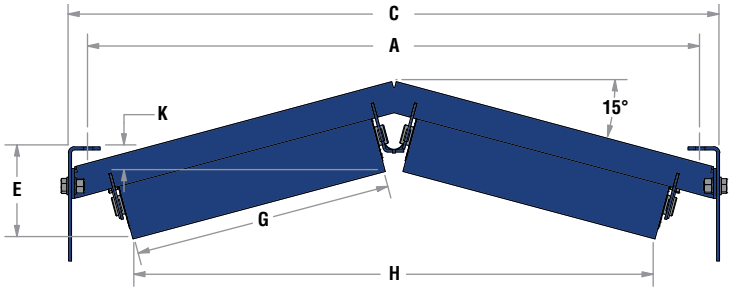

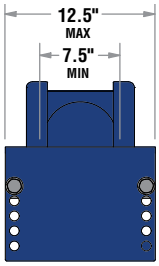

Steel Inverted V-Returns

Belt Width	6" Roll Diameter						7" Roll Diameter					
	Part Number	E	H	K	Wt.	Replacement Roll	Part Number	E	H	K	Wt.	Replacement Roll
36	E6-15IV-36-07	7.94	39.63	2.81	137	E6-T-54-07	E7-15IV-36-04	8.44	39.38	3.31	161	E7-T-54-07
42	E6-15IV-42-07	7.69	43.50	2.00	147	E6-T-60-07	E7-15IV-42-04	8.13	43.25	2.50	173	E7-T-60-07
48	E6-15IV-48-07	7.88	51.25	1.25	164	E6-T-72-07	E7-15IV-48-04	8.38	51.00	1.69	194	E7-T-72-07
54	E6-15IV-54-07	8.13	58.94	0.44	180	E6-T-84-07	E7-15IV-54-04	8.63	58.69	0.94	215	E7-T-84-07
60	E6-15IV-60-07	7.81	62.81	0.38	190	E6-IV-60-07	E7-15IV-60-04	8.31	62.56	0.13	227	E7-IV-60-07
66	E6-15IV-66-07	8.06	70.50	1.19	207	E6-V-66-07	E7-15IV-66-04	8.56	70.25	0.69	248	E7-V-66-07
72	E6-15IV-72-07	7.75	74.44	2.00	216	E6-IV-72-07	E7-15IV-72-04	8.25	74.13	1.50	260	E7-IV-72-07
84	E6-15IV-84-07	7.75	86.00	3.56	242	E6-IV-84-07	E7-15IV-84-04	8.25	85.75	3.13	294	E7-IV-84-07
96	E6-15IV-96-07	7.75	98.00	5.13	268	E6-IV-96-07	E7-15IV-96-04	8.25	97.81	4.63	327	E7-IV-96-07

Belt Width	Standard Dimensions		
	A	C	G
36	45	48.25	19.75
42	51	54.25	21.75
48	57	60.25	25.75
54	63	66.25	29.75
60	69	72.25	31.75
66	75	78.25	35.75
72	81	84.25	37.25
84	93	96.25	43.75
96	105	108.25	49.75

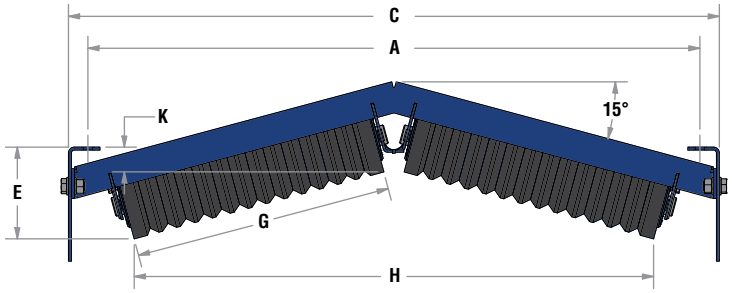

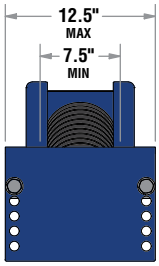

Rubber Disc Inverted V-Returns

Belt Width	6" Roll Diameter						7" Roll Diameter					
	Part Number	E	H	K	Wt.	Replacement Roll	Part Number	E	H	K	Wt.	Replacement Roll
36	E6-15IVRD-36	7.94	39.63	2.81	150	E6-TI-54	E7-15IVRD-36	8.44	39.38	3.31	174	E7-TI-54
42	E6-15IVRD-42	7.69	43.50	2.00	160	E6-TI-60	E7-15IVRD-42	8.13	43.25	2.50	186	E7-TI-60
48	E6-15IVRD-48	7.88	51.25	1.25	177	E6-TI-72	E7-15IVRD-48	8.38	51.00	1.69	207	E7-TI-72
54	E6-15IVRD-54	8.13	58.94	0.44	197	E6-TI-84	E7-15IVRD-54	8.63	58.69	0.94	232	E7-TI-84
60	E6-15IVRD-60	7.81	62.81	0.38	207	E6-IVRD-60	E7-15IVRD-60	8.31	62.56	0.13	244	E7-IVRD-60
66	E6-15VRD-66	8.06	70.50	1.19	224	E6-IVRD-66	E7-15IVRD-66	8.56	70.25	0.69	265	E7-IVRD-66
72	E6-15VRD-72	7.75	74.44	2.00	241	E6-IVRD-72	E7-15IVRD-72	8.25	74.13	1.50	285	E7-IVRD-72
84	E6-15VRD-84	7.75	86.00	3.56	267	E6-IVRD-84	E7-15IVRD-84	8.25	85.75	3.13	319	E7-IVRD-84
96	E6-15VRD-96	7.75	98.00	5.13	293	E6-IVRD-96	E7-15IVRD-96	8.25	97.81	4.63	352	E7-IVRD-96

CEMA C/D
Equal Steel Idler Frames

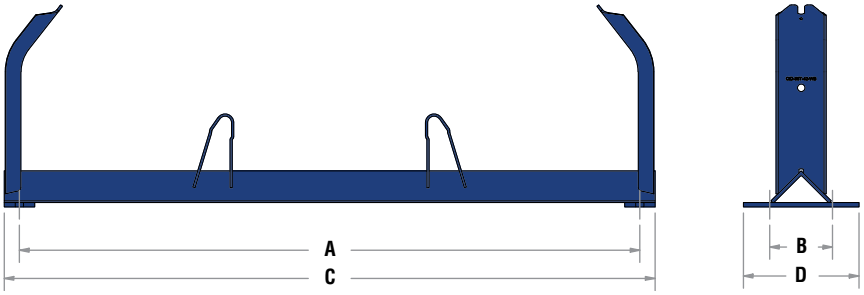

20º Equal Steel Idler Frame

Belt Width	Standard Dimensions					
	Part Number	A	B	C	D	Wt.
18	C-20T-18	27	5.5	29.5	8	19
20	C-20T-20	29	5.5	31.5	8	20
24	C/D-20T-24	33	5.5	35.5	8	21
30	C/D-20T-30	39	5.5	41.5	9.5	25
36	C/D-20T-36	45	5.5	47.5	9.5	27
42	C/D-20T-42	51	5.5	53.5	9.5	38
48	C/D-20T-48	57	5.5	59.5	9.5	41
54	C/D-20T-54	63	7	65.5	11	46
60	C/D-20T-60	69	7	71.5	11	49
72	D-20T-72	81	7	83.5	11	61

35º Equal Steel Idler Frame

Belt Width	Standard Dimensions					
	Part Number	A	B	C	D	Wt.
18	C-35T-18	27	5.5	29.5	8	20
20	C-35T-20	29	5.5	31.5	8	21
24	C/D-35T-24	33	5.5	35.5	8	23
30	C/D-35T-30	39	5.5	41.5	9.5	27
36	C/D-35T-36	45	5.5	47.5	9.5	30
42	C/D-35T-42	51	5.5	53.5	9.5	41
48	C/D-35T-48	57	5.5	59.5	9.5	45
54	C/D-35T-54	63	7	65.5	11	49
60	C/D-35T-60	69	7	71.5	11	53
72	D-35T-72	81	7	83.5	11	66

45º Equal Steel Idler Frame

Belt Width	Standard Dimensions					
	Part Number	A	B	C	D	Wt.
18	C-45T-18	27	5.5	29.5	8	22
20	C-45T-20	29	5.5	31.5	8	23
24	C/D-45T-24	33	5.5	35.5	8	25
30	C/D-45T-30	39	5.5	41.5	9.5	29
36	C/D-45T-36	45	5.5	47.5	9.5	32
42	C/D-45T-42	51	5.5	53.5	9.5	44
48	C/D-45T-48	57	5.5	59.5	9.5	48
54	C/D-45T-54	63	7	65.5	11	52
60	C/D-45T-60	69	7	71.5	11	56
72	D-45T-72	81	7	83.5	11	70

CEMA C/D
Reinforced Equal Impact Idler Frames

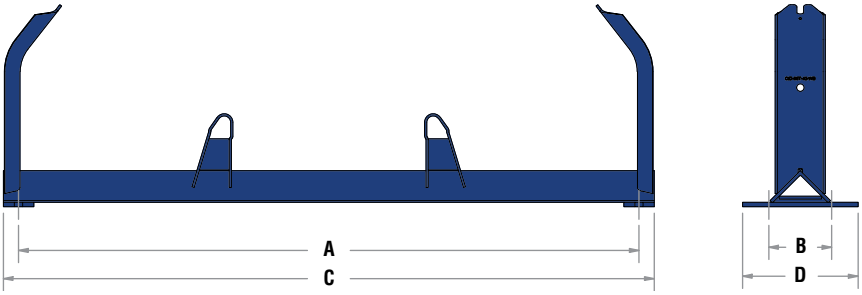

20º Equal Impact Idler Frame

Belt Width	Standard Dimensions					
	Part Number	A	B	C	D	Wt.
18	C-20TI-18	27	5.5	29.5	8	23
20	C-20TI-20	29	5.5	31.5	8	25
24	C/D-20TI-24	33	5.5	35.5	8	27
30	C/D-20TI-30	39	5.5	41.5	9.5	32
36	C/D-20TI-36	45	5.5	47.5	9.5	35
42	C/D-20TI-42	51	5.5	53.5	9.5	48
48	C/D-20TI-48	57	5.5	59.5	9.5	53
54	C/D-20TI-54	63	7	65.5	11	58
60	C/D-20TI-60	69	7	71.5	11	63
72	D-20TI-72	81	7	83.5	11	80

35º Equal Impact Idler Frame

Belt Width	Standard Dimensions					
	Part Number	A	B	C	D	Wt.
18	C-35TI-18	27	5.5	29.5	8	25
20	C-35TI-20	29	5.5	31.5	8	27
24	C/D-35TI-24	33	5.5	35.5	8	29
30	C/D-35TI-30	39	5.5	41.5	9.5	34
36	C/D-35TI-36	45	5.5	47.5	9.5	38
42	C/D-35TI-42	51	5.5	53.5	9.5	52
48	C/D-35TI-48	57	5.5	59.5	9.5	56
54	C/D-35TI-54	63	7	65.5	11	62
60	C/D-35TI-60	69	7	71.5	11	67
72	D-35TI-72	81	7	83.5	11	85

45º Equal Impact Idler Frame

Belt Width	Standard Dimensions					
	Part Number	A	B	C	D	Wt.
18	C-45TI-18	27	5.5	29.5	8	27
20	C-45TI-20	29	5.5	31.5	8	29
24	C/D-45TI-24	33	5.5	35.5	8	31
30	C/D-45TI-30	39	5.5	41.5	9.5	36
36	C/D-45TI-36	45	5.5	47.5	9.5	40
42	C/D-45TI-42	51	5.5	53.5	9.5	54
48	C/D-45TI-48	57	5.5	59.5	9.5	59
54	C/D-45TI-54	63	7	65.5	11	65
60	C/D-45TI-60	69	7	71.5	11	70
72	D-45TI-72	81	7	83.5	11	89

CEMA E
Equal Steel Idler Frames

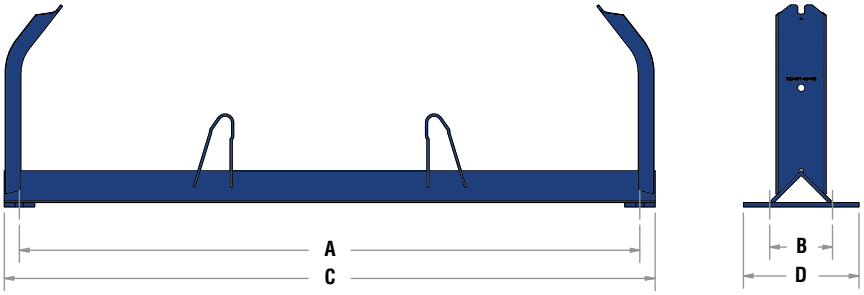

20º Equal Steel Idler Frame

Belt Width	Standard Dimensions					
	Part Number	A	B	C	D	Wt.
36	E-20T-36	45	7.5	47.5	12	60
42	E-20T-42	51	7.5	53.5	12	65
48	E-20T-48	57	7.5	59.5	12	69
54	E-20T-54	63	7.5	65.5	12	75
60	E-20T-60	69	7.5	71.5	12	81
66	E-20T-66	75	7.5	77.5	12	95
72	E-20T-72	81	7.5	83.5	12	109
84	E-20T-84	93	9	95.5	14.5	126
96	E-20T-96	105	9	107.5	14.5	140

35º Equal Steel Idler Frame

Belt Width	Standard Dimensions					
	Part Number	A	B	C	D	Wt.
36	E-35T-36	45	7.5	47.5	12	63
42	E-35T-42	51	7.5	53.5	12	69
48	E-35T-48	57	7.5	59.5	12	74
54	E-35T-54	63	7.5	65.5	12	80
60	E-35T-60	69	7.5	71.5	12	86
66	E-35T-66	75	7.5	77.5	12	101
72	E-35T-72	81	7.5	83.5	12	115
84	E-35T-84	93	9	95.5	14.5	133
96	E-35T-96	105	9	107.5	14.5	147

45º Equal Steel Idler Frame

Belt Width	Standard Dimensions					
	Part Number	A	B	C	D	Wt.
36	E-45T-36	45	7.5	47.5	12	66
42	E-45T-42	51	7.5	53.5	12	73
48	E-45T-48	57	7.5	59.5	12	79
54	E-45T-54	63	7.5	65.5	12	85
60	E-45T-60	69	7.5	71.5	12	91
66	E-45T-66	75	7.5	77.5	12	106
72	E-45T-72	81	7.5	83.5	12	121
84	E-45T-84	93	9	95.5	14.5	140
96	E-45T-96	105	9	107.5	14.5	154

CEMA E
Reinforced Equal Impact Idler Frames

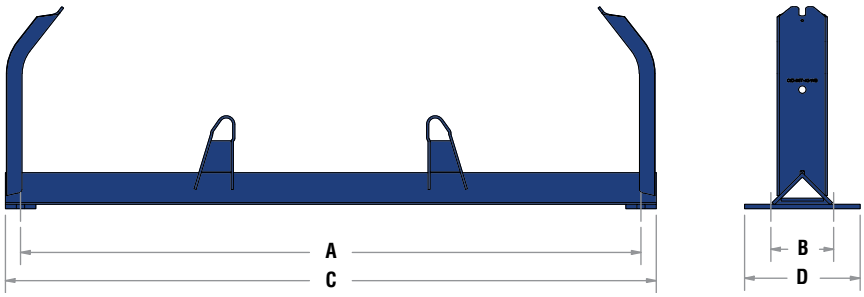

20º Equal Impact Idler Frame

Belt Width	Standard Dimensions					
	Part Number	A	B	C	D	Wt.
36	E-20TI-36	45	7.5	47.5	12	68
42	E-20TI-42	51	7.5	53.5	12	77
48	E-20TI-48	57	7.5	59.5	12	83
54	E-20TI-54	63	7.5	65.5	12	89
60	E-20TI-60	69	7.5	71.5	12	96
66	E-20TI-66	75	7.5	77.5	12	116
72	E-20TI-72	81	7.5	83.5	12	135
84	E-20TI-84	93	9	95.5	14.5	154
96	E-20TI-96	105	9	107.5	14.5	173

35º Equal Impact Idler Frame

Belt Width	Standard Dimensions					
	Part Number	A	B	C	D	Wt.
36	E-35TI-36	45	7.5	47.5	12	75
42	E-35TI-42	51	7.5	53.5	12	83
48	E-35TI-48	57	7.5	59.5	12	90
54	E-35TI-54	63	7.5	65.5	12	97
60	E-35TI-60	69	7.5	71.5	12	104
66	E-35TI-66	75	7.5	77.5	12	124
72	E-35TI-72	81	7.5	83.5	12	143
84	E-35TI-84	93	9	95.5	14.5	164
96	E-35TI-96	105	9	107.5	14.5	183

45º Equal Impact Idler Frame

Belt Width	Standard Dimensions					
	Part Number	A	B	C	D	Wt.
36	E-45TI-36	45	7.5	47.5	12	82
42	E-45TI-42	51	7.5	53.5	12	89
48	E-45TI-48	57	7.5	59.5	12	97
54	E-45TI-54	63	7.5	65.5	12	105
60	E-45TI-60	69	7.5	71.5	12	112
66	E-45TI-66	75	7.5	77.5	12	132
72	E-45TI-72	81	7.5	83.5	12	151
84	E-45TI-84	93	9	95.5	14.5	174
96	E-45TI-96	105	9	107.5	14.5	193

CEMA C/ D
Footpads & Brackets

Footpads for CEMA C & D Idlers

18-24 BELTS

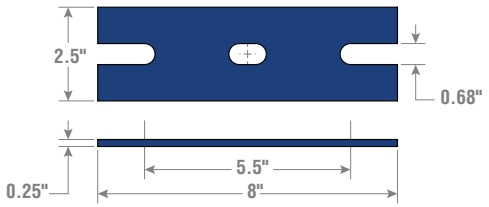

30-48 BELTS

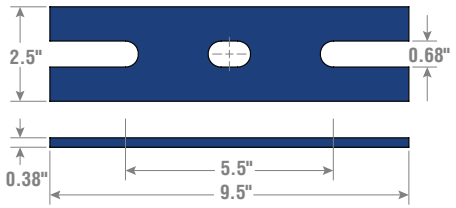

54-72 BELTS

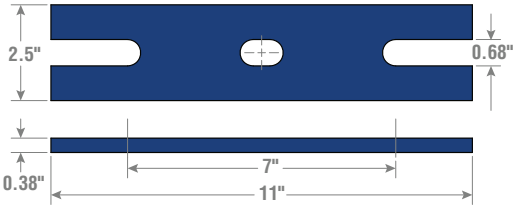

Channel Inset Bracket

4" DROP BRACKET C/D-CWR-4

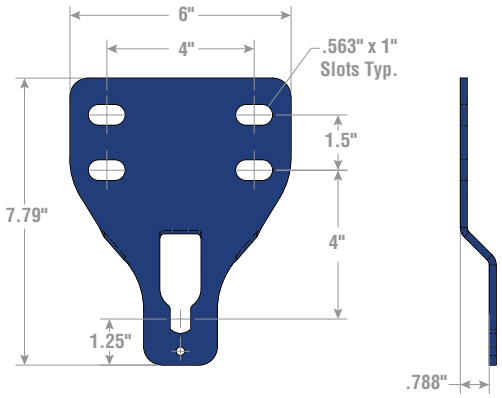

Rise & Drop Brackets for CEMA C & D

1.5" RISE BRACKETS: C/D-F-1

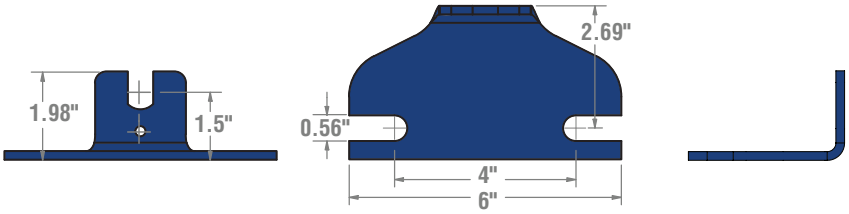

4.5" RISE BRACKET: C/D-F-4

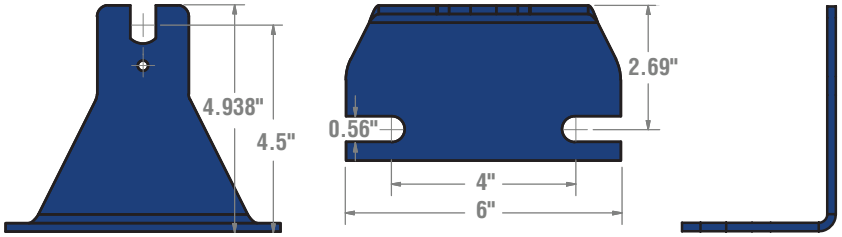

1.5" DROP BRACKET: C/D-R-1

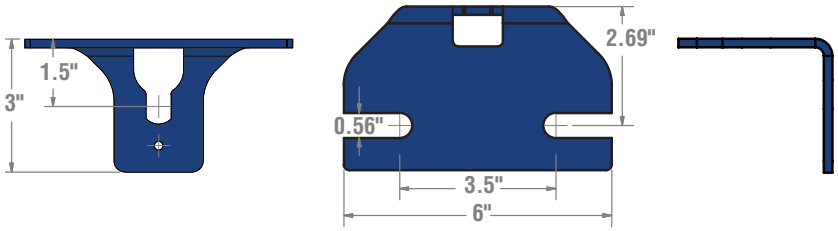

4.5" DROP BRACKET: C/D-R-4

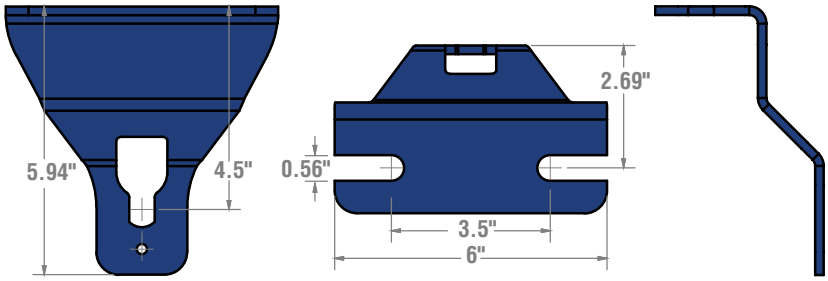

4.5" BELT SAVER DROP BRACKET: C/D-R-4S

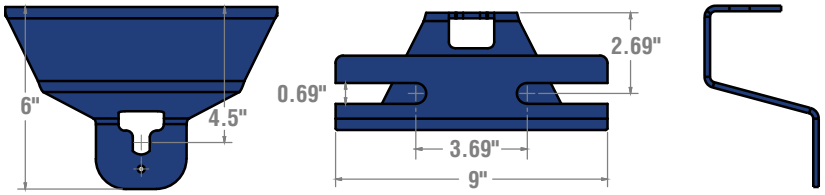

CEMA E
Footpads & Brackets

Footpads for CEMA E

36 - 72 BELTS

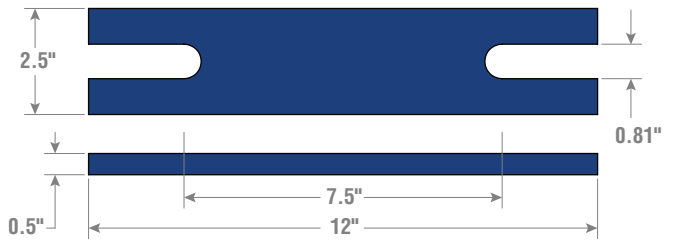

84 - 96 BELTS

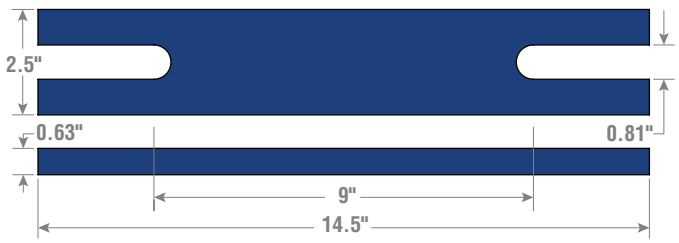

Rise & Drop Brackets for CEMA E

4.5" RISE BRACKET: E-F-4

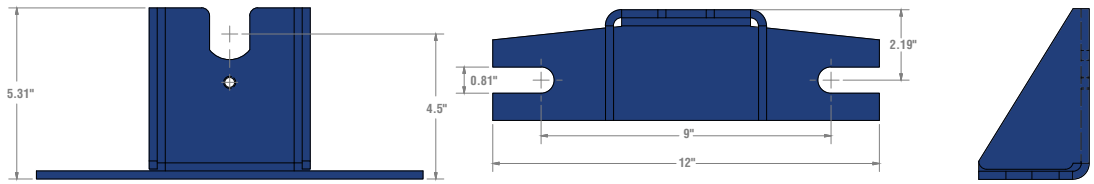

1.5" DROP BRACKET: E-R-1

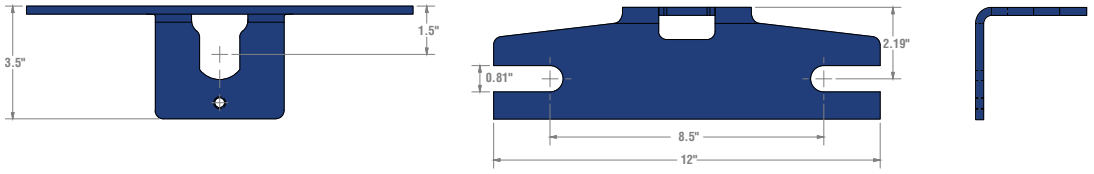

4.5" BELT SAVER DROP BRACKET: E-R-4S

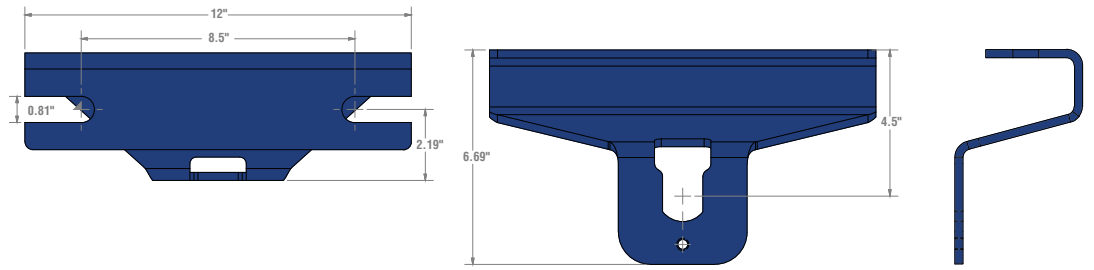

7" BELT SAVER DROP BRACKET: E-R-7S

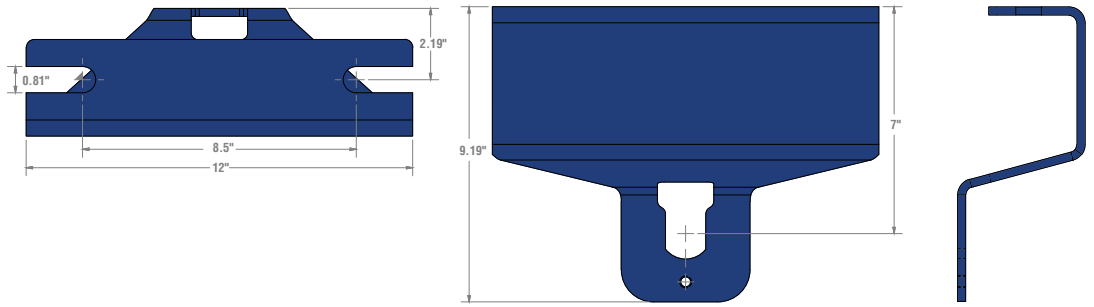

Self-Aligner Accessories

Self-Aligner Guide Rolls

Self-Aligner Left Arm Guide Roll Kit

SA-LARM-KIT

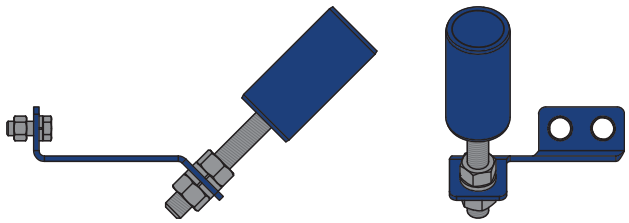

Self-Aligner right Arm Guide Roll Kit

SA-RARM-KIT

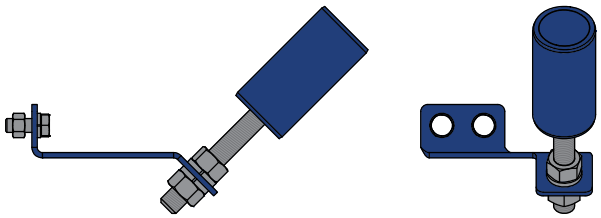

TSA Steel Actuator Roll

C/D-TSA-SROLL

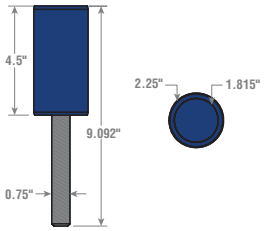

Short Steel Actuator Roll

C/D-RSA-SROLL

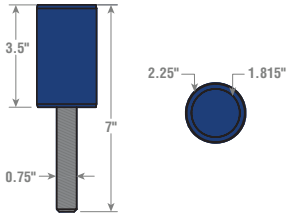

Self-Aligner Treaded Guide Roll

SA-TROLL

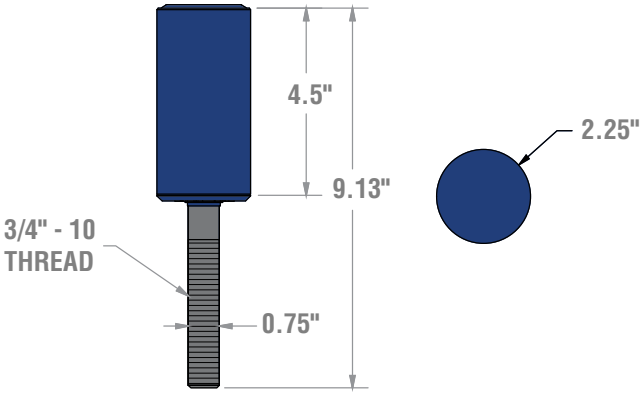

Shoe-Type Available

Impact Beds

Features:

- **Absorbs Impacts** – Designed with heavy-duty C-channel steel framework and standard 3" × 4" rubber impact bars that absorb the shock of heavy loads.
- **3/4" UHMW cap** on the bar provides a wear surface. The UHMW has a low coefficient of friction, reducing drag.
- **Construction** – 4' beds have 4 legs & 5' beds have 5 legs.
- **Standard Models (4' & 5' lengths)** – Adjustable to 20° or 35° and can be laid flat if needed.
- **MTO** 45° Martin Impact Beds are available.

Benefits:

Martin Impact Beds are engineered to offer an efficient and safe means of dispersing impact force, reducing material rebound and assisting in eliminating spillage in the loading zone. Martin Impact beds are designed to meet today's demanding material handling applications by offering the following benefits:

- Protects the conveyor belt
- Easy and safe installation
- Improved transfer point sealing over standard impact Idlers
- Adjustable Wing Angle
- Medium Duty – up to 750 lb-ft impact force
- Impact Beds are stocked in 24" – 48" belt widths
- Compliments roll height or CEMA C and D Idlers

Uses:

- Material (lump) size, density and drop height can cause considerable impact force that damages the conveyor belt and structure. The proper Martin Impact Bed should be selected to absorb impact energy and reduce the chances of belt, component or conveyor structure damage.
- Martin Impact Beds allow skirting to be installed against a solid bar creating a better sealed transfer point, potentially reducing material spillage.

Selection Requirements:

- Belt Width
- Troughing Angle
- Roll Diameter and CEMA Rating (typically 5" or 6" and CEMA C, D, and E)
- Bed Length
- Drop Height, Lump Size, and Material Density

MTO Martin 'H' beds can be designed for custom heavy applications

Impact Beds

Impact Energy Calculation Chart

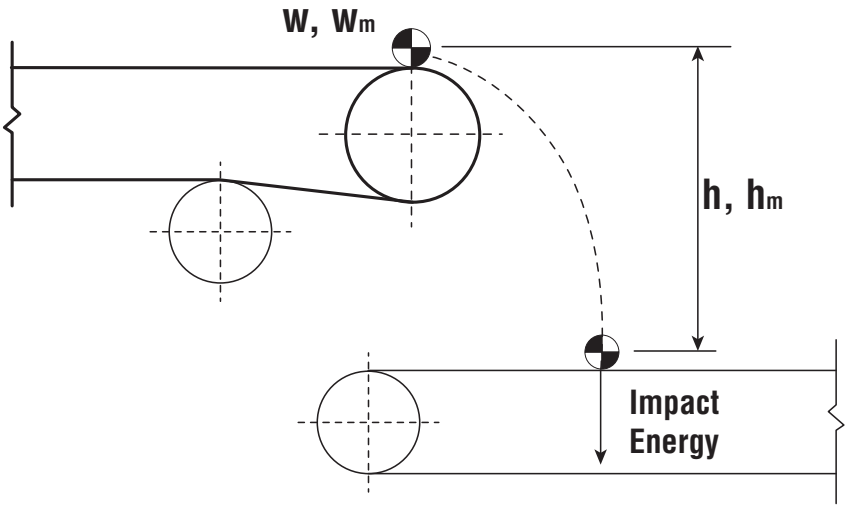

Lump Weight (w) = Lump Size (cu.ft.) × Density

= _____ lb

Drop Height (h) = _____ ft

Impact Energy = Lump Weight × Drop Height

= _____ lb-ft

Martin 'S' bed rated to 750 lb-ft

Replacement Impact Bars

Part Number	Length
IBB-48	4'
IBB-60	5'

Impact Beds

Part Number	Belt Width	Length
S4-35IB-18-4	18"	4'
S4-35IB-18-5	18"	5'
S4-35IB-24-4	24"	4'
S4-35IB-24-5	24"	5'
S4-35IB-30-4	30"	4'
S4-35IB-30-5	30"	5'
S4-35IB-36-4	36"	4'
S4-35IB-36-5	36"	5'
S4-35IB-42-4	42"	4'
S4-35IB-42-5	42"	5'
S4-35IB-48-4	48"	4'
S4-35IB-48-5	48"	5'
S4-35IB-54-4	54"	4'
S4-35IB-54-5	54"	5'
S4-35IB-60-4	60"	4'
S4-35IB-60-5	60"	5'
S4-35IB-72-4	72"	4'
S4-35IB-72-5	72"	5'
S5-35IB-18-4	18"	4'
S5-35IB-18-5	18"	5'
S5-35IB-24-4	24"	4'
S5-35IB-24-5	24"	5'
S5-35IB-30-4	30"	4'
S5-35IB-30-5	30"	5'
S5-35IB-36-4	36"	4'
S5-35IB-36-5	36"	5'
S5-35IB-42-4	42"	4'
S5-35IB-42-5	42"	5'
S5-35IB-48-4	48"	4'
S5-35IB-48-5	48"	5'
S5-35IB-54-4	54"	4'
S5-35IB-54-5	54"	5'
S5-35IB-60-4	60"	4'
S5-35IB-60-5	60"	5'
S5-35IB-72-4	72"	4'
S5-35IB-72-5	72"	5'
S6-35IB-18-4	18"	4'
S6-35IB-18-5	18"	5'
S6-35IB-24-4	24"	4'
S6-35IB-24-5	24"	5'
S6-35IB-30-4	30"	4'
S6-35IB-30-5	30"	5'
S6-35IB-36-4	36"	4'
S6-35IB-36-5	36"	5'
S6-35IB-42-4	42"	4'
S6-35IB-42-5	42"	5'
S6-35IB-48-4	48"	4'
S6-35IB-48-5	48"	5'
S6-35IB-54-4	54"	4'
S6-35IB-54-5	54"	5'
S6-35IB-60-4	60"	4'
S6-35IB-60-5	60"	5'
S6-35IB-72-4	72"	4'
S6-35IB-72-5	72"	5'

Impact Slider Beds

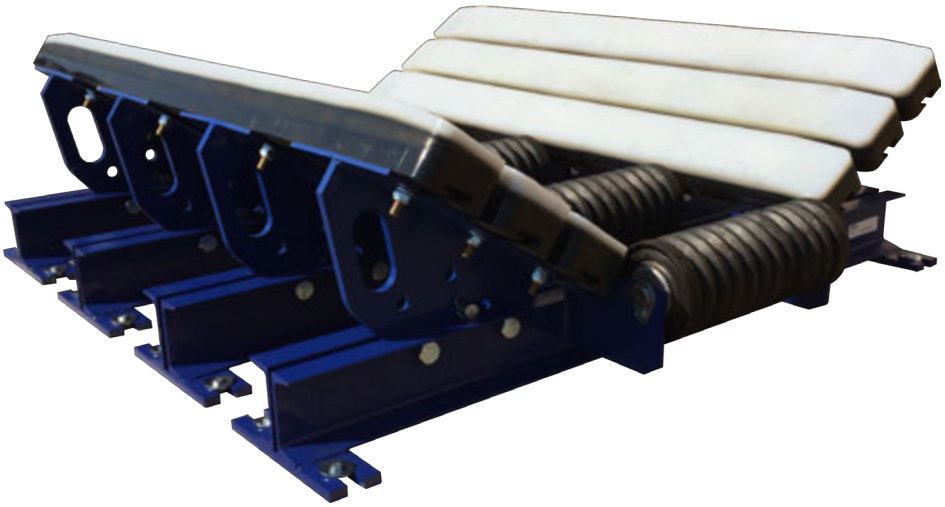

Features:

- **Absorbs Impacts** – Designed with heavy-duty C-channel steel framework and standard 3" x 4" rubber impact bars on the wings that absorb the shock of heavy loads.
- **3/4" UHMW cap** on the bar provides a wear surface. The UHMW has a low coefficient of friction, reducing drag.
- **Uses stock Impact Bed frames** with center roll brackets welded in place
- **Construction** – 4' beds have 4 legs & 5' beds have 5 legs.
- **Standard Models (4' & 5' lengths)** – Martin Impact Slider Beds are adjustable to 20° or 35° and can be laid flat if needed.
- **MTO 45°** Martin Impact Slider Bed are available.

Benefits:

Martin Impact Slider Beds offer an efficient and safe means of dispersing impact force, reducing material rebound and to assist in eliminating spillage in the loading zone.

Martin Impact slider bed reduces the additional belt to bar friction generated by regular impact beds. This can be important if motor HP is a concern.

Martin Impact Slider Beds are designed to meet today's demanding material handling applications by offering the following benefits:

- Protects the conveyor belt
- Easy and safe installation
- Improved transfer point sealing over standard impact Idlers
- Adjustable Wing Angle
- Medium Duty – up to 750 lb-ft
  - » Compliments roll height of CEMA C and D Idlers
- Heavy-Duty – engineered upon request
  - » Compliments roll height of CEMA E Idlers

Uses:

- A combination of material (lump) size, density and drop height can cause considerable impact force that damages the conveyor belt and structure. The proper Martin Impact Slider should be chosen to absorb the impact energy and minimize damage.
- Martin Impact Slider Beds allow skirting to seal down against a solid impact bar, potentially reducing material spillage.

Selection Requirements:

- Belt Width
- Troughing Angle
- Roll Diameter and CEMA Class (typically 5" or 6" and CEMA C, D, and E)
- If system HP is a concern, an Impact Slider Bed will have reduced drag versus a conventional Impact Bed
- Bed Length
- Drop Height, Lump Size, and Material Density

Impact Slider Beds

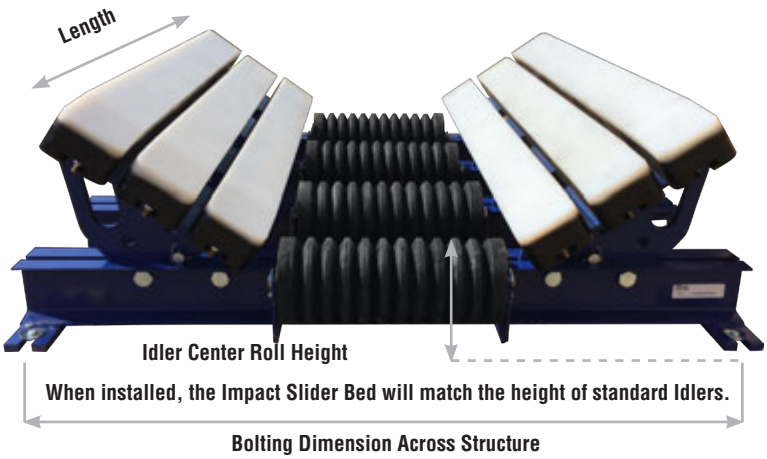

Impact Energy Calculation Chart

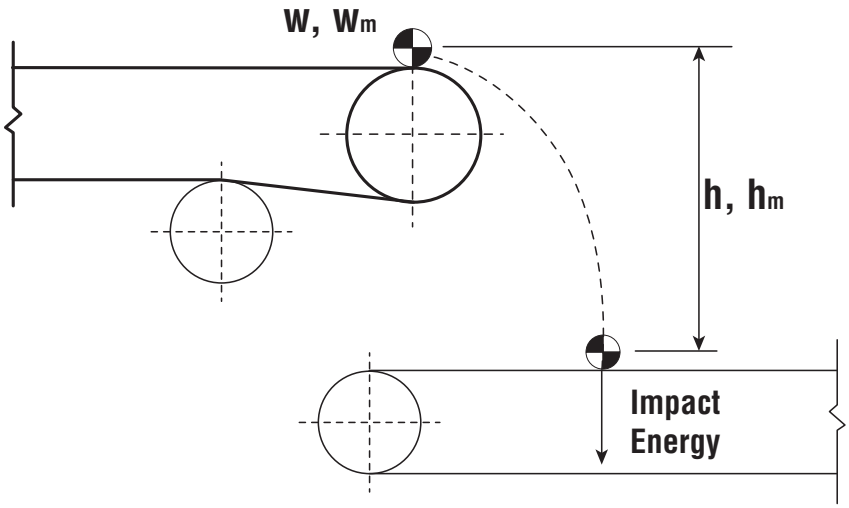

Lump Weight (w) = Lump Size (cu.ft.) × Density

= _____ lb

Drop Height (h) = _____ ft

Impact Energy = Lump Weight × Drop Height

= _____ lb-ft

Martin 'S' bed rated to 750 lb-ft

Replacement Impact Roll

Part Number	Description
D5-TI-BW	CEMA D 5" Impact Roll Replacement
D6-TI-BW	CEMA D 6" Impact Roll Replacement

Replacement Impact Bars

Part Number	Description
IBB-48	Replacement bar for 4ft impact beds
IBB-60	Replacement bar for 5ft impact beds

Impact Slider Beds

Part Number	Description
S4-35ISB-18-4	18" BW 4' IMPACT SLIDER BED
S4-35ISB-18-5	18" BW 5' IMPACT SLIDER BED
S4-35ISB-24-4	24" BW 4' IMPACT SLIDER BED
S4-35ISB-24-5	24" BW 5' IMPACT SLIDER BED
S4-35ISB-30-4	30" BW 4' IMPACT SLIDER BED
S4-35ISB-30-5	30" BW 5' IMPACT SLIDER BED
S4-35ISB-36-4	36" BW 4' IMPACT SLIDER BED
S4-35ISB-36-5	36" BW 5' IMPACT SLIDER BED
S4-35ISB-42-4	42" BW 4' IMPACT SLIDER BED
S4-35ISB-42-5	42" BW 5' IMPACT SLIDER BED
S4-35ISB-48-4	48" BW 4' IMPACT SLIDER BED
S4-35ISB-48-5	48" BW 5' IMPACT SLIDER BED
S4-35ISB-54-4	54" BW 4' IMPACT SLIDER BED
S4-35ISB-54-5	54" BW 5' IMPACT SLIDER BED
S4-35ISB-60-4	60" BW 4' IMPACT SLIDER BED
S4-35ISB-60-5	60" BW 5' IMPACT SLIDER BED
S4-35ISB-72-4	72" BW 4' IMPACT SLIDER BED
S4-35ISB-72-5	72" BW 5' IMPACT SLIDER BED
S5-35ISB-18-4	18" BW 4' IMPACT SLIDER BED
S5-35ISB-18-5	18" BW 5' IMPACT SLIDER BED
S5-35ISB-24-4	24" BW 4' IMPACT SLIDER BED
S5-35ISB-24-5	24" BW 5' IMPACT SLIDER BED
S5-35ISB-30-4	30" BW 4' IMPACT SLIDER BED
S5-35ISB-30-5	30" BW 5' IMPACT SLIDER BED
S5-35ISB-36-4	36" BW 4' IMPACT SLIDER BED
S5-35ISB-36-5	36" BW 5' IMPACT SLIDER BED
S5-35ISB-42-4	42" BW 4' IMPACT SLIDER BED
S5-35ISB-42-5	42" BW 5' IMPACT SLIDER BED
S5-35ISB-48-4	48" BW 4' IMPACT SLIDER BED
S5-35ISB-48-5	48" BW 5' IMPACT SLIDER BED
S5-35ISB-54-4	54" BW 4' IMPACT SLIDER BED
S5-35ISB-54-5	54" BW 5' IMPACT SLIDER BED
S5-35ISB-60-4	60" BW 4' IMPACT SLIDER BED
S5-35ISB-60-5	60" BW 5' IMPACT SLIDER BED
S5-35ISB-72-4	72" BW 4' IMPACT SLIDER BED
S5-35ISB-72-5	72" BW 5' IMPACT SLIDER BED
S6-35ISB-18-4	18" BW 4' IMPACT SLIDER BED
S6-35ISB-18-5	18" BW 5' IMPACT SLIDER BED
S6-35ISB-24-4	24" BW 4' IMPACT SLIDER BED
S6-35ISB-24-5	24" BW 5' IMPACT SLIDER BED
S6-35ISB-30-4	30" BW 4' IMPACT SLIDER BED
S6-35ISB-30-5	30" BW 5' IMPACT SLIDER BED
S6-35ISB-36-4	36" BW 4' IMPACT SLIDER BED
S6-35ISB-36-5	36" BW 5' IMPACT SLIDER BED
S6-35ISB-42-4	42" BW 4' IMPACT SLIDER BED
S6-35ISB-42-5	42" BW 5' IMPACT SLIDER BED
S6-35ISB-48-4	48" BW 4' IMPACT SLIDER BED
S6-35ISB-48-5	48" BW 5' IMPACT SLIDER BED
S6-35ISB-54-4	54" BW 4' IMPACT SLIDER BED
S6-35ISB-54-5	54" BW 5' IMPACT SLIDER BED
S6-35ISB-60-4	60" BW 4' IMPACT SLIDER BED
S6-35ISB-60-5	60" BW 5' IMPACT SLIDER BED
S6-35ISB-72-4	72" BW 4' IMPACT SLIDER BED
S6-35ISB-72-5	72" BW 5' IMPACT SLIDER BED

Retrofit Rolls

Martin manufactures Retrofit Rolls that fit other manufacturer's frames. You get the benefits & performance of the Martin Roll in your existing frame or drop brackets

C5 - T - 36 FN - 09

CEMA Class & Diameter

C, D, or E	CEMA Class
4, 5, 6, or 7	Diameter (Inches)

Roll Type

T	Steel Equal Idler
TI	Impact Equal Idler
F	Steel Flat Carry
FRD	Impact Flat Carry
R	Steel Return
RRD	Rubber Disc Return
V	Steel V-Return
VRD	Rubber Disc V-Return

Belt Width in Inches

Wall Thickness Gauge

09, 07, 04

Manufacturer Code

Slot End:

CCS	Continental Canada Slot
CS	Continental/Joy Slot
DS	Douglas Slot
FS	FMC/Syntron Slot
GS	Goodman Slot
LS	Luff Slot End
MS	Melco Slot
PS	Prok Slot
RS	Rulmeca Slot
SAS	Stephens Adamson/Metso Slot
SS	Superior Slot
VS	Van Gorp Slot

Hex Nut End:

CN	Continental/Joy Hex Nut
FN	FMC/Syntron Hex Nut
GN	Goodman Hex Nut
HN	Hewitt Hex Nut
RN	Rexnord Hex Nut
SAN	Stephens Adamson/Metso Hex Nut
SN	Superior Hex Nut

Special Construction

- Adjustable/Transitional Idlers
- Box Style Idlers
- Catenary
- Galvanized Frames
- Grain Idlers
- Removable Wing Bracket
- Retractable Idlers
- Scale Quality Idlers
- Split Center Roll Idlers
- Urethane-Covered Rolls
- Wide Base Idlers
- Wire Rope Idlers
- And more

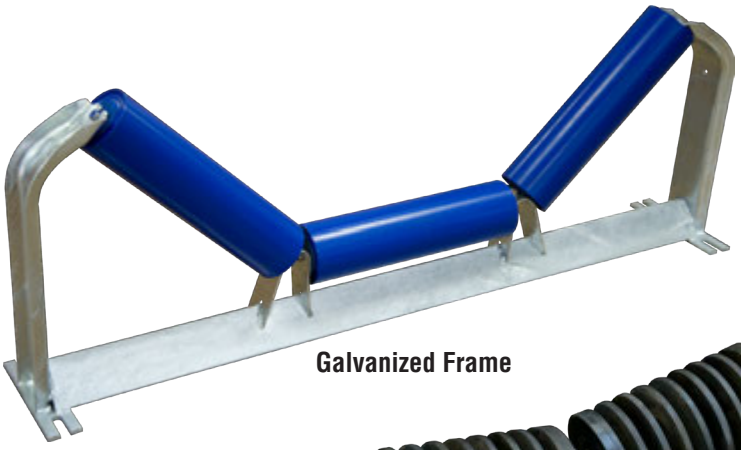

Galvanized Frame

Retractable Idler

Scale Quality Idlers

Martin offers Scale Quality Idlers as part of our product line.

Add "Q" after the roll type in the part number for Scale Quality Idler Part number. For Example C5-35TQ-36-09.

Martin Scale Quality Idlers are available for CEMA C, D, and E for all belt widths.

CEMA Standard Scale Quality Idlers

- Martin SQ rolls have a TIR (Total Indicator Runout) within .015"
- Roll Axis is +/- .031" from perpendicular through center of base
- Wing Brackets are perpendicular within 1°
- Center roll height is +0, -.125"
- Troughing angles are within 1°

Retrofit Roll Data Sheet

Date: _____ By: _____

Company Name: _____

Contact: _____

Idler ID: _____ Project/Quote: _____

1. Choose your Roll and fill out all the required information for it:

Quantity: _____

Roll Length (**RL**): _____

Roll Diameter (**RD**): _____

Shaft Length (**SL**): _____

Shaft Diameter (**SD**): _____

Center of Slot to Slot (**C/C**): _____

CEMA Series: _____

Manufacturer: _____

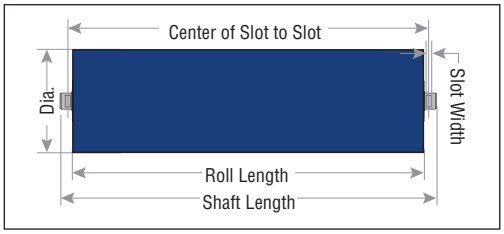

◯ Steel Roll

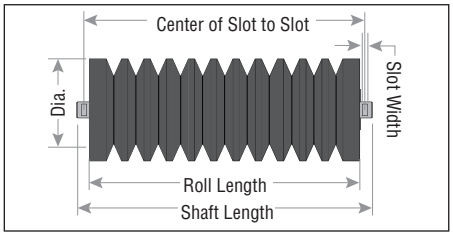

◯ Impact Roll

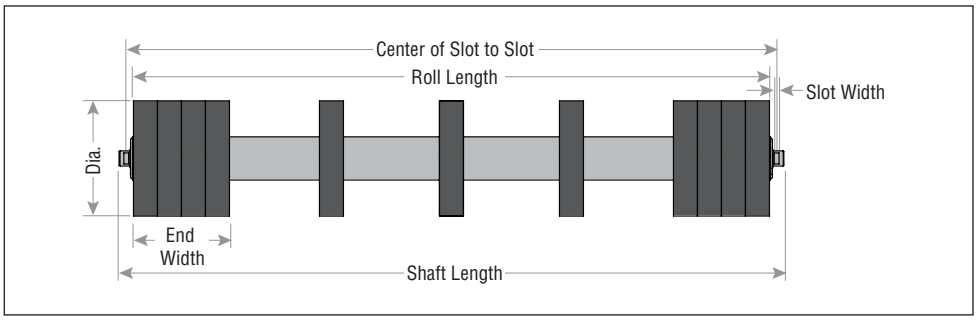

◯ Rubber Roll

2. Choose your style and fill out all the required information for it:

KEY:
Across Flats (**AF**)
Shoulder (**SH**)
Slot Width (**SW**)

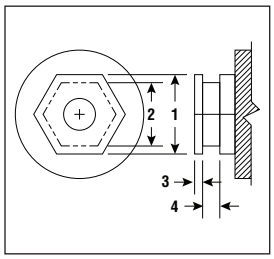

◯ Style A: Hex Hex

1. Outer Hex AF _____
2. Inner Hex AF _____
3. SH _____
4. SW _____

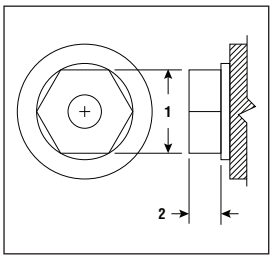

◯ Style B: Hex No Shoulder

1. Hex AF _____
2. Hex Length _____

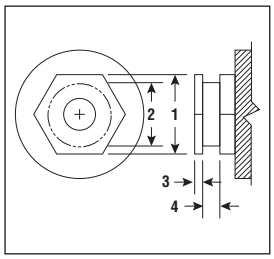

◯ Style C: Hex Round

1. Outer Hex AF _____
2. Inner Dia _____
3. SH _____
4. SW _____

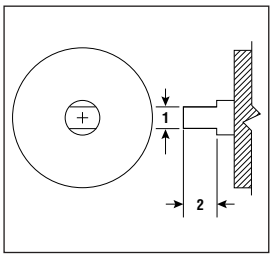

◯ Style D: Milled Flat

1. AF _____
2. SW _____

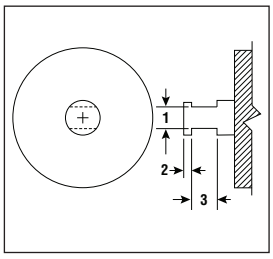

◯ Style E: Slot

1. AF _____
2. SH _____
3. SW _____

Retrofit Roll Data Sheet

KEY:
Across Flats (**AF**)
Shoulder (**SH**)
Slot Width (**SW**)

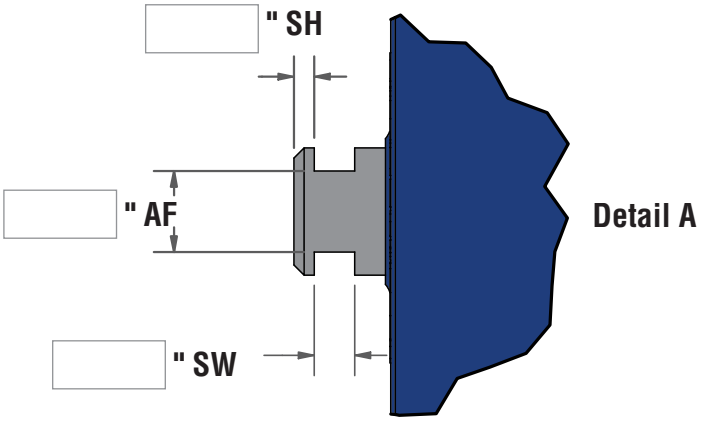

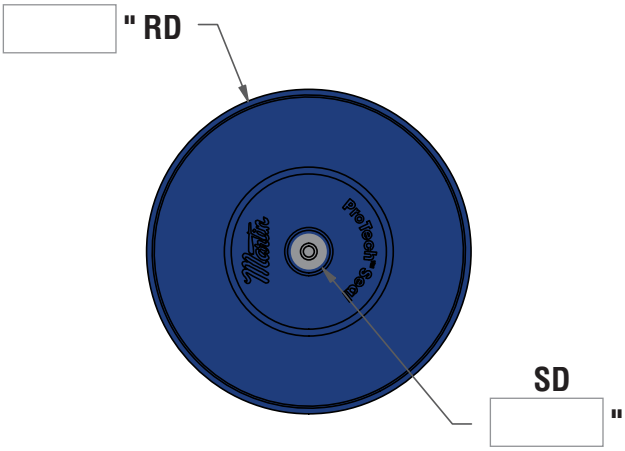

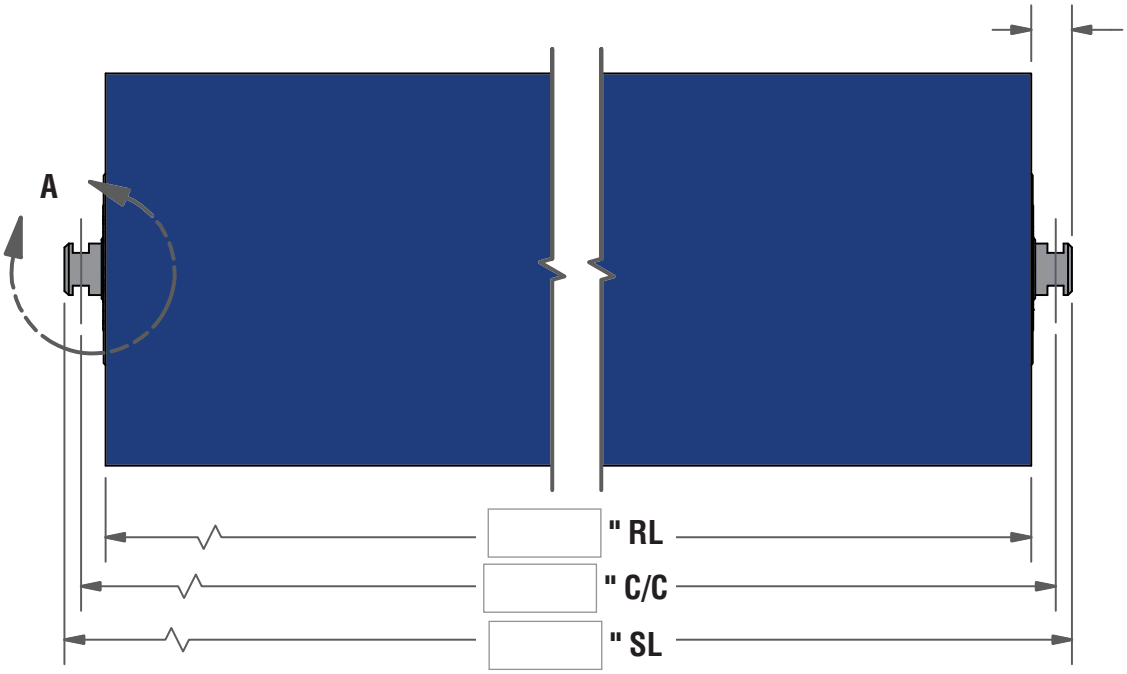

Notes