PLASTICS

PRODUCT **PAGE**

SECTION I – NON-METALLIC SPROCKETS . . . . . L-2 – L-30
SPROCKETS - STOCK
NO. 25 – ¼" PITCH L-5
NO. 35 – ⅜" PITCH L-6
NO. 40 – ½" PITCH L-7
NO. 50 – ⅝" PITCH L-8
NO. 60 – ¾" PITCH L-9
NO. 80 – 1" PITCH L-10
NO. 100 – 1¼" PITCH L-11
SPROCKETS - METRIC . . . . . L-12 – L-14
IDLER SPROCKETS L-15
DOUBLE PITCH SPROCKETS . . . . . L-16 – L-20
MILL DUTY SPROCKETS . . . . . L-21 – L-29
PLASTIC FLAT TOP CONVEYOR SPROCKET . . . . . L-30 – L-34

SECTION II – NATURAL NYLON GEARS . . . . . L-35 – L-40
GEARS - STOCK – 14½° PRESSURE ANGLE
4DP – 2" FACE L-36
5DP – 1¾" FACE L-37
6DP – 1½" FACE L-38
8DP – 1¼" FACE L-39
10DP – 1" FACE L-40
12DP – ¾" FACE L-41
16DP – ½" FACE L-42
20DP – ⅜" FACE L-43
GEAR RACKS – 14½° PRESSURE ANGLE L-44
GEAR RACKS – 20° PRESSURE ANGLE L-44

SECTION III – WHEELS & ROLLERS . . . . . L-45 – L-46

SECTION IV – SPECIALTY ITEMS . . . . . L-47 – L-61
WASTE WATER TREATMENT PRODUCTS . . . . . L-47 – L-49
REPLACEMENT PARTS FOR BOTTLING & PACKAGING PLANTS L-50
STATIONARY GUIDES . . . . . L-51 – L-61

Non-Metallic Sprockets

Benefits:

- **Extend Chain Life**
- **Corrosion Resistant Materials**
- **Light-Weight**
- **USDA/FDA Approved**
- **For use with Steel or Plastic Chain**

To meet our customers' diverse needs, Martin offers many roller chain sprockets made of industrial plastics. Plastic roller chain sprockets often prove superior in performance and durability compared with conventional metallic sprockets.

The benefits of using plastic roller chain sprockets include extended chain life, corrosion resistance, light weight, and decreased noise levels.

Martin plastic sprockets are available in USDA/FDA approved materials for applications involving food or drug processing and packaging.

Roller chain is available in sizes No. 25, 35, and 40. Most roller chain sprockets are available in "A" plate, "B" hub, or "C" hub styles. "B" hubs are made with either plastic or bolt-on metal hubs. Martin also manufactures metal hubs in steel and stainless steel.

Non-standard or custom-sized sprockets are also available, including square bores, snap ring and grease grooves, special cutouts, and special tooth dimensions. Martin can fabricate products from several types of plastics, including:

- **Nylon**
- **UHMW**
- **Acetal**
- **Teflon®**
- **Polypropylene**

Roller Chain Sprockets Nomenclature

D 160 B 16 NM 2 1/4

# of Strands

Blank Single
D Double
E Triple
F Quadruple
DS Double Single

Chain Pitch *(measured in eighths)*

25 = 2/8 = 1/4"	**100** = 10/8 = 1 1/4"
35 = 3/8 = 3/8"	**120** = 12/8 = 1 1/2"
40 = 4/8 = 1/2"	**140** = 14/8 = 1 3/4"
41 = 4/8 = 1/2"	**160** = 16/8 = 2"
50 = 5/8 = 5/8"	**180** = 18/8 = 2 1/4"
60 = 6/8 = 3/4"	**200** = 20/8 = 2 1/2"
80 = 8/8 = 1"	**240** = 24/8 = 3"

Sprocket Type

A	Plate Only	**JA, SH,...**	QD
B	Hub One Side	**BTB**	Taper Bushed
C	Hub Both Sides	**H, P, Q,...**	MST®
D	Detachable Hubs	**BS**	Bored-To-Size

# of Teeth

Material

NM Non-Metallic

Bore Size

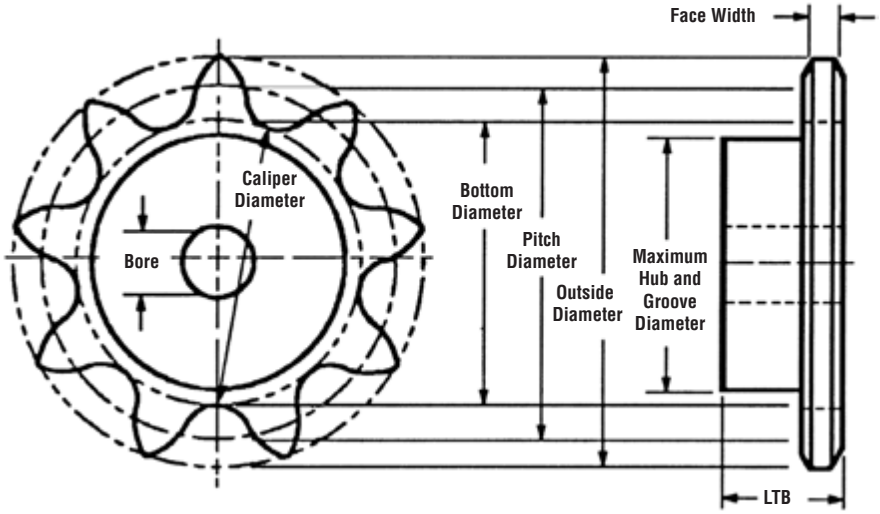

Sprocket Dimensional Specifications

Bottom Diameter (B.D.) – The diameter of a circle tangent to the seating curve at the bottom of the tooth gap of a roller chain sprocket.

Caliper Diameter – Since the bottom diameter of a sprocket with odd number of teeth cannot be measured directly, caliper diameters are the measurement across the tooth gaps nearly opposite.

Pitch Diameter (P.D.) – The diameter across to the pitch circle which is the circle followed by the centers of the chain pins as the sprocket revolves in mesh with the chain.

$$PD = \frac{PITCH}{SIN\ (180/Nt)}$$

Outside Diameter (O.D.) – The measurement from the tip of the sprocket tooth across to the corresponding point directly across the sprocket. It is comparatively unimportant as the tooth length is not vital to proper meshing with the chain. The outside diameter may vary depending on type of cutter used.

OD = (Pitch) (.6 + COT [180 / Nt])

Hub Diameter (HOD) – That distance across the hub from one side to another. This diameter must not exceed the calculated diameter of the inside of the chain side bars.

Maximum Sprocket Bore – Maximum Sprocket Bore is determined by the required hub wall thickness for proper strength. Allowance must be made for keyway and setscrews.

Face Width – Face width is limited in its maximum dimension to allow proper clearance to provide for chain engagement and disengagement. The minimum width is limited to provide the proper strength to carry the imposed loads.

Length Thru Bore (LTB) – Length Thru Bore (or L.T.B.) must be sufficient to allow a long enough key to withstand the torque transmitted by the shaft. This also assures stability of the sprocket on the shaft.

Plastic Sprockets

No. 25 ¼" Pitch

Available with:

- Stock Bore
- Finished Bore Sizes

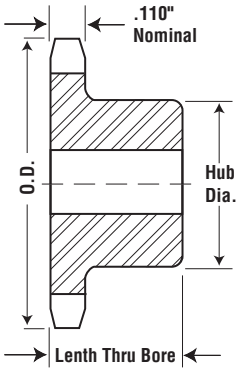

TYPE B

Single-Type B — Nylon

Number of Teeth	Catalog Number	Diameter		Type	Bore (in)		Hub (in)	
		Outside	Pitch		Stock	Max	Diameter	LTB
9	25B9NM	0.837	0.731	B	0.25	0.25	0.594	0.5
10	25B10NM	0.919	0.809	B	0.25	0.313	0.563	0.485
11	25B11NM	1.001	0.887	B	0.25	0.375	0.563	0.485
12	25B12NM	1.083	0.966	B	0.25	0.438	0.688	0.485
13	25B13NM	1.164	1.045	B	0.25	0.5	0.75	0.485
14	25B14NM	1.245	1.123	B	0.375	0.5	0.75	0.485
15	25B15NM	1.326	1.202	B	0.375	0.5	0.75	0.485
16	25B16NM	1.407	1.281	B	0.375	0.5	0.813	0.485
17	25B17NM	1.487	1.361	B	0.375	0.5	0.906	0.485
18	25B18NM	1.568	1.44	B	0.375	0.5	1	0.485
19	25B19NM	1.648	1.519	B	0.375	0.5	1.063	0.485
20	25B20NM	1.728	1.598	B	0.375	0.5	1.156	0.485
21	25B21NM	1.809	1.677	B	0.375	0.5	1.156	0.485
22	25B22NM	1.889	1.757	B	0.375	0.5	1.156	0.485
23	25B23NM	1.969	1.836	B	0.375	0.5	1.156	0.485
24	25B24NM	2.049	1.915	B	0.5	0.188	1.781	0.7
25	25B25NM	2.129	1.995	B	0.5	1	1.86	0.7
26	25B26NM	2.209	2.074	B	0.5	0.188	1.938	0.7
27	25B27NM	2.289	2.153	B	0.5	1	2	0.7
28	25B28NM	2.369	2.233	B	0.5	0.188	1.219	0.7
29	25B29NM	2.449	2.312	B	0.5	1	2	0.7
30	25B30NM	2.529	2.392	B	0.5	1	2	0.7
31	25B31NM	2.609	2.471	B	0.5	1	2	0.7
32	25B32NM	2.688	2.551	B	0.5	1	2	0.7
33	25B33NM	2.688	2.63	B	0.5	1	2	0.7
34	25B34NM	2.848	2.709	B	0.5	1	2	0.7
35	25B35NM	2.928	2.789	B	0.5	1	2	0.7
36	25B36NM	3.008	2.868	B	0.5	1	2	0.7
37	25B37NM	3.087	2.948	B	0.5	1	2	0.7
39	25B39NM	3.167	3.107	B	0.5	1	2	0.7
40	25B40NM	3.327	3.186	B	0.5	1	2	0.7
41	25B41NM	3.406	3.266	B	0.5	1	2	0.7
42	25B42NM	3.486	3.345	B	0.5	1	2	0.7
43	25B43NM	3.566	3.425	B	0.5	1	2	0.7
44	25B44NM	3.646	3.504	B	0.5	1	2	0.7
45	25B45NM	3.725	3.584	B	0.5	1	2	0.7
46	25B46NM	3.805	3.663	B	0.5	1	2	0.7
47	25B47NM	3.885	3.743	B	0.5	1	2	0.7
48	25B48NM	3.964	3.822	B	0.5	1	2	0.7
49	25B49NM	4.044	3.902	B	0.5	1.5	2	0.75
50	25B50NM	4.124	3.981	B	0.5	1.5	2	0.75
54	25B54NM	4.442	4.3	B	0.5	1.5	2	0.75
60	25B60NM	4.92	4.777	B	0.5	0.875	1.375	0.61

Notes:

- Standard Material: Natural Nylon.
- Other numbers of teeth and hub styles available.
- Available as stock drilled bore, finished drive bore with keyway and setscrews, or idler bore.
- A Plate and C Style also available.

No. 35
3/8" Pitch

Plastic Sprockets

Martin

Available with:

- Stock Bore
- Finished Bore Sizes

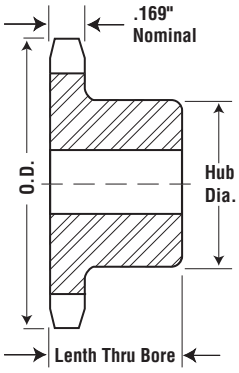

TYPE B

Single-Type B — Nylon

Number of Teeth	Catalog Number	Diameter		Type	Bore (in)		Hub (in)	
		Outside	Pitch		Stock	Max	Diameter	LTB
8	35B8NM	1.13	0.98	B	0.25	0.375	0.75*	0.75
9	35B9NM	1.096	1.096	B	0.25	0.375	0.844*	0.75
10	35B10NM	1.379	1.214	B	0.375	0.438	0.969*	0.75
11	35B11NM	1.502	1.331	B	0.375	0.5	1.063*	0.75
12	35B12NM	1.625	1.449	B	0.5	0.563	1.219*	0.75
13	35B13NM	1.746	1.567	B	0.5	0.5	1.250*	0.75
14	35B14NM	1.868	1.685	B	0.5	0.75	1.25	0.75
15	35B15NM	1.989	1.804	B	0.5	0.813	1.344	0.875
16	35B16NM	2.11	1.922	B	0.5	0.938	1.469	0.875
17	35B17NM	2.231	2.041	B	0.5	0.875	1.594	0.875
18	35B18NM	2.352	2.16	B	0.5	0.688	1.719	0.875
19	35B19NM	2.472	2.278	B	0.5	1	1.844	0.875
20	35B20NM	2.593	2.397	B	0.5	1.188	1.938	0.875
21	35B21NM	2.713	2.516	B	0.5	1	2	0.875
22	35B22NM	2.833	2.635	B	0.5	1	2	0.875
23	35B23NM	2.953	2.754	B	0.5	1	2	0.875
24	35B24NM	3.073	2.873	B	0.5	1.188	2	0.875
25	35B25NM	3.193	2.992	B	0.5	1	2	0.875
26	35B26NM	3.313	3.111	B	0.5	1.438	2	0.875
27	35B27NM	3.433	3.23	B	0.5	1	2	0.875
28	35B28NM	3.553	3.349	B	0.5	1	2	0.875
29	35B29NM	3.673	3.468	B	0.5	1	2	0.875
30	35B30NM	3.793	3.588	B	0.5	1.438	2	0.875
31	35B31NM	3.913	3.707	B	0.5	1	2	0.875
32	35B32NM	4.032	3.826	B	0.5	1.5	2	0.875
33	35B33NM	4.152	3.945	B	0.5	1.5	2.375	0.875
34	35B34NM	4.272	4.064	B	0.5	1.5	2.375	0.875
35	35B35NM	4.392	4.183	B	0.5	1.438	2.375	0.875
36	35B36NM	4.511	4.303	B	0.5	1.438	2.375	0.875
37	35B37NM	4.631	4.422	B	0.5	1.5	2.375	0.875
38	35B38NM	4.751	4.541	B	0.5	1.5	2.375	0.875
39	35B39NM	4.87	4.66	B	0.5	1.5	2.375	0.875
40	35B40NM	4.99	4.78	B	0.5	1.75	2.375	1
41	35B41NM	5.109	4.899	B	0.5	1.5	2.375	1
42	35B42NM	5.229	5.018	B	0.5	1.5	2.375	1
43	35B43NM	5.349	5.137	B	0.5	1.5	2.375	1
44	35B44NM	5.468	5.257	B	0.5	1.5	2.375	1
45	35B45NM	5.588	5.376	B	0.5	1.75	2.375	1
46	35B46NM	5.707	5.495	B	0.5	1.5	2.375	1
47	35B47NM	5.827	5.614	B	0.5	1.5	2.375	1
48	35B48NM	5.946	5.734	B	0.5	1.5	2.375	1

* Has recessed groove for chain clearance.

Notes:
- Standard Material: Natural Nylon.
- Other numbers of teeth and hub styles available.
- Available as stock drilled bore, finished drive bore with keyway and setscrews, or idler bore.
- A Plate and C Style also available.

Plastic Sprockets

No. 40 ½" Pitch

Available with:

- Stock Bore
- Finished Bore Sizes

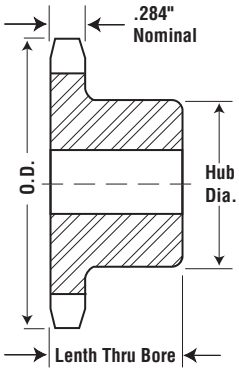

TYPE B

Single-Type B — Nylon

Number of Teeth	Catalog Number	Diameter		Type	Bore (in)		Hub (in)	
		Outside	Pitch		Stock	Max	Diameter	LTB
8	40B8NM	1.507	1.307	B	0.5	0.5	1	0.875
9	40B9NM	1.674	1.462	B	0.5	0.5	1.063	0.875
10	40B10NM	1.839	1.618	B	0.5	0.5	1.25	0.875
11	40B11NM	2.003	1.775	B	0.5	0.5	1.375	0.875
12	40B12NM	2.166	1.932	B	0.5	0.625	1.563	0.875
13	40B13NM	2.329	2.089	B	0.5	0.625	1.563	0.875
14	40B14NM	2.491	2.247	B	0.5	0.75	1.688	0.875
15	40B15NM	2.652	2.405	B	0.5	0.875	1.813	0.875
16	40B16NM	2.814	2.563	B	0.5	0.938	2	0.875
17	40B17NM	2.975	2.721	B	0.5	1	2.125	1
18	40B18NM	3.136	2.879	B	0.5	1.125	2.313	1
19	40B19NM	3.296	3.308	B	0.5	1.25	2.5	1
20	40B20NM	3.457	3.196	B	0.5	1.25	2.625	1
21	40B21NM	3.617	3.355	B	0.5	1.25	2.75	1
22	40B22NM	3.778	3.513	B	0.5	1.375	2.875	1
23	40B23NM	3.938	3.672	B	0.5	1.375	3	1
24	40B24NM	4.098	3.831	B	0.5	1.5	3.25	1
25	40B25NM	4.258	3.989	B	0.5	1.5	3.25	1
26	40B26NM	4.418	4.148	B	0.5	1.5	3.25	1
27	40B27NM	4.578	4.307	B	0.5	1.5	3.25	1
28	40B28NM	4.738	4.466	B	0.5	1.5	3.25	1
29	40B29NM	4.897	4.625	B	0.5	1.5	3.25	1
30	40B30NM	5.057	4.783	B	0.5	1.5	3.25	1
31	40B31NM	5.217	4.942	B	0.5	1.5	3.25	1
32	40B32NM	5.377	5.101	B	0.5	1.5	3.25	1
33	40B33NM	5.536	5.26	B	0.5	1.5	3.25	1
34	40B34NM	5.696	5.419	B	0.5	1.5	3.25	1
35	40B35NM	5.855	5.578	B	0.5	1.5	3.25	1
36	40B36NM	6.015	5.737	B	0.5	1.5	3.25	1
37	40B37NM	6.175	5.896	B	0.5	1.5	3.25	1
38	40B38NM	6.334	6.055	B	0.5	1.5	3.25	1
39	40B39NM	6.494	6.214	B	1	1.5	3.25	1
40	40B40NM	6.653	6.373	B	1	1.75	3.5	1.125
41	40B41NM	6.813	6.532	B	1	1.75	3.5	1.125
42	40B42NM	6.972	6.691	B	1	1.75	3.5	1.125
43	40B43NM	7.131	6.85	B	1	1.75	3.5	1.125
44	40B44NM	7.291	7.009	B	1	1.75	3.5	1.125
45	40B45NM	7.45	7.168	B	1	1.75	3.5	1.125
46	40B46NM	7.61	7.327	B	1	1.75	3.5	1.125
47	40B47NM	7.769	7.486	B	1	1.75	3.5	1.125
48	40B48NM	7.929	7.645	B	1	1.75	3.5	1.125

Notes:

- Standard Material: Natural Nylon.
- Other numbers of teeth and hub styles available.
- Available as stock drilled bore, finished drive bore with keyway and setscrews, or idler bore.
- A Plate and C Style also available.

No. 50
5/8" Pitch

Plastic Sprockets

Martin

Available with:

- Stock Bore
- Finished Bore Sizes

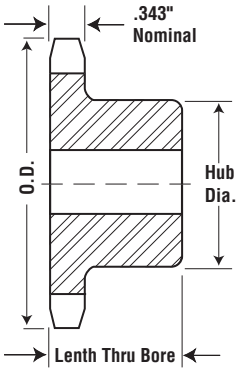

TYPE B

Single-Type B — Nylon

Number of Teeth	Catalog Number	Diameter		Type	Bore (in)		Hub (in)	
		Outside	Pitch		Stock	Max	Diameter	LTB
9	50B9NM	2.092	1.827	B	0.5	0.625	1.375*	1
10	50B10NM	1.839	2.023	B	0.5	0.75	1.563*	1
11	50B11NM	2.504	2.218	B	0.5	0.875	1.75*	1
12	50B12NM	2.708	2.415	B	0.5	1	1.984*	1
13	50B13NM	2.911	2.612	B	0.5	0.875	1.875	1
14	50B14NM	3.113	2.803	B	0.5	1	2.125	1
15	50B15NM	3.315	3.006	B	0.5	1.25	2.375	1
16	50B16NM	3.517	3.204	B	0.5	1.25	2.5	1
17	50B17NM	3.718	3.401	B	0.5	1.375	2.688	1
18	50B18NM	3.92	3.599	B	0.5	1.5	2.875	1
19	50B19NM	4.12	3.797	B	0.5	1.625	3	1
20	50B20NM	4.321	3.995	B	0.5	1.625	3	1
21	50B21NM	4.522	4.193	B	0.5	1.625	3	1
22	50B22NM	4.722	4.392	B	0.5	1.625	3	1
23	50B23NM	4.922	4.59	B	0.5	1.625	3	1
24	50B24NM	5.122	4.788	B	0.5	1.625	3	1.25
25	50B25NM	5.322	4.987	B	0.5	1.625	3	1.25
26	50B26NM	5.522	5.185	B	0.5	1.625	3	1.25
27	50B27NM	5.722	5.384	B	0.5	1.625	3	1.25
28	50B28NM	5.922	5.582	B	0.5	1.625	3	1.25
29	50B29NM	6.122	5.781	B	0.5	1.625	3	1.25
30	50B30NM	6.321	5.979	B	0.5	1.75	3.75	1.25
31	50B31NM	6.521	6.178	B	0.5	1.75	3.75	1.25
32	50B32NM	6.721	6.376	B	0.5	1.75	3.75	1.25
33	50B33NM	6.92	6.575	B	0.5	1.75	3.75	1.25
34	50B34NM	7.12	6.774	B	0.5	1.75	3.75	1.25
35	50B35NM	7.319	6.972	B	0.5	1.75	3.75	1.25
36	50B36NM	7.519	7.171	B	0.5	1.75	3.75	1.25
37	50B37NM	7.718	7.37	B	0.5	1.75	3.75	1.25
38	50B38NM	7.918	7.568	B	0.5	1.75	3.75	1.25
39	50B39NM	8.117	7.767	B	0.5	1.75	3.75	1.25
40	50B40NM	8.316	7.966	B	0.75	2	3.5	1.25
41	50B41NM	8.516	8.165	B	0.75	2	3.5	1.25
42	50B42NM	8.715	8.363	B	0.75	2	3.5	1.25
43	50B43NM	8.914	8.562	B	0.75	2	3.5	1.25
44	50B44NM	9.114	8.761	B	0.75	2	3.5	1.25
45	50B45NM	9.313	8.96	B	0.75	2.375	4	1.25
46	50B46NM	9.512	9.159	B	0.75	2.375	4	1.25
47	50B47NM	9.711	9.357	B	0.75	2.375	4	1.25
48	50B48NM	9.911	9.556	B	0.75	2.375	4	1.25

* Has recessed groove for chain clearance.

Notes:
- Standard Material: Natural Nylon.
- Other numbers of teeth and hub styles available.
- Available as stock drilled bore, finished drive bore with keyway and setscrews, or idler bore.
- A Plate and C Style also available.

Plastic Sprockets

No. 60
¾" Pitch

Available with:

- Stock Bore
- Finished Bore Sizes

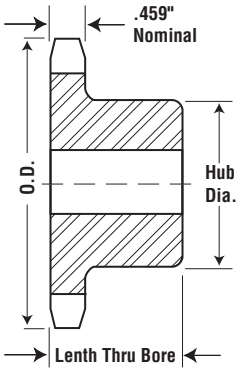

TYPE B

Single-Type B — Nylon

Number of Teeth	Catalog Number	Diameter		Type	Bore (in)		Hub (in)	
		Outside	Pitch		Stock	Max	Diameter	LTB
8	60B8NM	2.261	1.96	B	0.5	0.625	1.5*	1.25
9	60B9NM	2.511	2.193	B	0.5	0.875	1.5*	1.25
10	60B10NM	2.758	2.427	B	0.5	1	0.5	1.25
11	60B11NM	3.004	2.662	B	0.75	1	2*	1.25
12	60B12NM	3.249	2.898	B	0.75	1	2	1.25
13	60B13NM	3.493	3.134	B	0.75	1	2.313	1.25
14	60B14NM	3.736	3.37	B	0.75	1	2.5	1.25
15	60B15NM	3.978	3.607	B	0.75	1	2.875	1.25
16	60B16NM	4.221	3.844	B	0.75	1	3	1.25
17	60B17NM	4.462	4.082	B	1	2	3.25	1.25
18	60B18NM	4.703	4.319	B	1	2	3.5	1.25
19	60B19NM	4.945	4.557	B	1	2	3.5	1.25
20	60B20NM	5.185	4.794	B	1	2	3.875	1.25
21	60B21NM	5.426	5.032	B	1	2	4	1.25
22	60B22NM	5.666	5.27	B	1	2	4	1.25
23	60B23NM	5.907	5.508	B	1	2	4	1.25
24	60B24NM	6.147	5.746	B	1	2	4	1.25
25	60B25NM	6.387	5.984	B	1	2	4	1.25
26	60B26NM	6.627	6.222	B	1	2.5	4	1.25
27	60B27NM	6.867	6.46	B	1	2.5	4	1.25
28	60B28NM	7.106	6.699	B	1	2.5	4	1.25
29	60B29NM	7.346	6.937	B	1	2.5	4	1.25
30	60B30NM	7.586	7.175	B	1	2.5	4	1.25
31	60B31NM	7.825	7.413	B	1	2.5	4	1.25
32	60B32NM	8.065	7.652	B	1	2.5	4	1.25
33	60B33NM	8.304	7.89	B	1	2.5	4	1.25
34	60B34NM	8.544	8.128	B	1	3	4.5	1.25
35	60B35NM	8.783	8.367	B	1	3	4.5	1.25
36	60B36NM	9.023	8.605	B	1	3	4.5	1.25
37	60B37NM	9.262	8.844	B	1	3	4.5	1.25
38	60B38NM	9.501	9.082	B	1	3	4.5	1.25
39	60B39NM	9.74	9.321	B	1	3	4.5	1.25
40	60B40NM	9.98	9.559	B	1	3	4.5	1.25
41	60B41NM	10.219	9.798	B	1	3	4.5	1.25
42	60B42NM	10.458	10.036	B	1	3.5	5	1.25
43	60B43NM	10.697	10.275	B	1	3.5	5	1.25
44	60B44NM	10.936	10.513	B	1	3.5	5	1.25
45	60B45NM	11.175	10.752	B	1	3.5	5	1.25
46	60B46NM	11.415	10.99	B	1	3.5	5	1.25
47	60B47NM	11.654	11.229	B	1	3.5	5	1.25
48	60B48NM	11.893	11.467	B	1	3.5	5	1.25
49	60B49NM	12.132	11.706	B	1	3.5	5	1.25
50	60B50NM	12.371	11.944	B	1	3.5	5	1.25

* Has recessed groove for chain clearance.

Notes:

- Standard Material: Natural Nylon.
- Other numbers of teeth and hub styles available.
- Available as stock drilled bore, finished drive bore with keyway and setscrews, or idler bore.
- A Plate and C Style also available.

No. 80
1" Pitch

Plastic Sprockets

Martin

Available with:

- Stock Bore
- Finished Bore Sizes

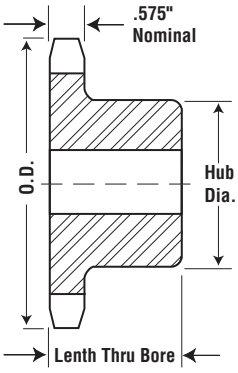

TYPE B

Single-Type B — Nylon

Number of Teeth	Catalog Number	Diameter		Type	Bore (in)		Hub (in)	
		Outside	Pitch		Stock	Max	Diameter	LTB
8	80B8NM	3.014	2.613	B	0.75	1	2*	1.5
9	80B9NM	3.347	2.924	B	0.75	1	2*	1.5
10	80B10NM	3.678	3.236	B	0.75	1	2	1.5
11	80B11NM	4.006	3.549	B	0.75	1	2	1.5
12	80B12NM	4.332	3.864	B	0.75	1	2	1.5
13	80B13NM	4.657	4.179	B	1	2	3.25	1.5
14	80B14NM	4.981	4.494	B	1	2	3.25	1.5
15	80B15NM	5.305	4.81	B	1	2	3.25	1.5
16	80B16NM	5.627	5.126	B	1	2	3.25	1.5
17	80B17NM	5.95	5.442	B	1	2	3.25	1.5
18	80B18NM	6.271	5.759	B	1	2	3.25	1.5
19	80B19NM	6.593	6.076	B	1	2.5	4	1.5
20	80B20NM	6.914	6.392	B	1	2.5	4	1.5
21	80B21NM	7.235	6.71	B	1	2.5	4	1.75
22	80B22NM	7.555	7.027	B	1	2.5	4	1.75
23	80B23NM	7.876	7.344	B	1	2.5	4	1.75
24	80B24NM	8.196	7.661	B	1	2.5	4	1.75
25	80B25NM	8.516	7.979	B	1	2.5	4	1.75
26	80B26NM	8.836	8.296	B	1	3	4.5	2
27	80B27NM	9.156	8.614	B	1	3	4.5	2
28	80B28NM	9.475	8.931	B	1	3	4.5	2
29	80B29NM	9.795	9.249	B	1	3	4.5	2
30	80B30NM	10.114	9.567	B	1	3	4.5	2
31	80B31NM	10.434	9.885	B	1	3	4.5	2
32	80B32NM	10.753	10.202	B	1	3.5	5	2
33	80B33NM	11.072	10.52	B	1	3.5	5	2
34	80B34NM	11.392	10.838	B	1	3.5	5	2
35	80B35NM	11.711	11.156	B	1	3.5	5	2
36	80B36NM	12.03	11.474	B	1	3.5	5	2
37	80B37NM	12.349	11.792	B	1	3.5	5	2
38	80B38NM	12.668	12.11	B	1	4	5.5	2
39	80B39NM	12.987	12.428	B	1	4	5.5	2
40	80B40NM	13.306	12.746	B	1	4	5.5	2
41	80B41NM	13.625	13.063	B	1	4	5.5	2
42	80B42NM	13.944	13.382	B	1	4	5.5	2
43	80B43NM	14.263	13.7	B	1	4	5.5	2
44	80B44NM	14.582	14.018	B	1	4	6	2
45	80B45NM	14.901	14.336	B	1	4	6	2
46	80B46NM	15.219	14.654	B	1	4	6	2
47	80B47NM	15.538	14.972	B	1	4	6	2
48	80B48NM	15.857	15.29	B	1	4	6	2
49	80B49NM	16.176	15.608	B	1	4	6	2
50	80B50NM	16.495	15.926	B	1	4	6	2

* Has recessed groove for chain clearance.

Notes:

- Standard Material: Natural Nylon.
- Other numbers of teeth and hub styles available.
- Available as stock drilled bore, finished drive bore with keyway and setscrews, or idler bore.
- A Plate and C Style also available.

Plastic Sprockets

No. 100 1¼" Pitch

Available with:

- Stock Bore
- Finished Bore Sizes

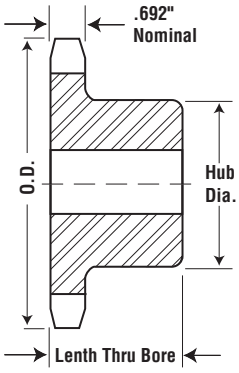

TYPE B

Single-Type B — Nylon

Number of Teeth	Catalog Number	Diameter		Type	Bore (in)		Hub (in)	
		Outside	Pitch		Stock	Max	Diameter	LTB
8	100B8NM	3.768	3.266	B	0.75	1	2	1.75
9	100B9NM	4.184	3.655	B	0.75	1	2	1.75
10	100B10NM	4.597	4.045	B	1	2.25	3.25	1.75
11	100B11NM	5.007	4.437	B	1	2.25	3.25	1.75
12	100B12NM	5.415	4.83	B	1	2.25	3.25	1.75
13	100B13NM	5.821	5.223	B	1	2.25	3.25	1.75
14	100B14NM	6.227	5.617	B	1	2.25	3.25	1.75
15	100B15NM	6.631	6.012	B	1	2.5	4	1.75
16	100B16NM	7.034	6.407	B	1	2.5	4	1.75
17	100B17NM	7.437	6.803	B	1	2.5	4	1.75
18	100B18NM	7.839	7.198	B	1	2.5	4	1.75
19	100B19NM	8.241	7.594	B	1	2.5	4	2
20	100B20NM	8.642	7.991	B	1	2.5	4	2
21	100B21NM	9.043	8.387	B	1	3	4.5	2
22	100B22NM	9.444	8.783	B	0.5	3	4.5	2
23	100B23NM	9.844	9.18	B	0.5	3	4.5	2
24	100B24NM	10.245	9.577	B	0.5	3	4.5	2
25	100B25NM	10.645	9.973	B	0.5	3	4.5	2
26	100B26NM	11.045	10.37	B	0.5	3.5	5	2
27	100B27NM	11.444	10.767	B	0.5	3.5	5	2
28	100B28NM	11.844	11.164	B	0.5	3.5	5	2
29	100B29NM	12.244	11.561	B	0.5	3.5	5	2
30	100B30NM	12.643	11.958	B	0.5	3.5	5	2
31	100B31NM	13.043	12.356	B	0.5	4	5.5	2
32	100B32NM	13.441	12.753	B	0.5	4	5.5	2
33	100B33NM	13.841	13.15	B	0.5	4	5.5	2
34	100B34NM	14.24	13.547	B	0.5	4	5.5	2
35	100B35NM	14.639	13.945	B	0.5	4	5.5	2.5
36	100B36NM	15.038	14.342	B	1	4	5.5	2.5
37	100B37NM	15.436	14.74	B	1	4	6	2.5
38	100B38NM	15.835	15.137	B	1	4	6	2.5
39	100B39NM	16.234	15.534	B	1	4	6	2.5
40	100B40NM	16.633	15.932	B	1	4	6	2.5
41	100B41NM	17.031	16.329	B	1	4	6	2.5
42	100B42NM	17.43	16.727	B	1	4	6	2.5
43	100B43NM	17.829	17.124	B	1	4	6	2.5
44	100B44NM	18.228	17.522	B	1	4	6	2.5
45	100B45NM	18.626	17.919	B	1	4	6	2.5
46	100B46NM	19.024	18.317	B	1	4	6	2.5
47	100B47NM	19.423	18.715	B	1	4	6	2.5
48	100B48NM	19.821	19.112	B	1	4	6	2.5
49	100B49NM	20.22	19.51	B	1	4	6	2.5
50	100B50NM	20.619	19.907	B	1	4	6	2.5

Notes:

- Standard Material: Natural Nylon.
- Other numbers of teeth and hub styles available.
- Available as stock drilled bore, finished drive bore with keyway and setscrews, or idler bore.
- A Plate and C Style also available.

Metric
Plastic Sprockets

ISO **08B-1**
METRIC **40**

0.500 INCH (12.70mm) PITCH SIMPLEX

CHAIN DATA:
BS 228/7ISO
08B-1PITCH: 12.70mm (0.500 in.)
ROLLER DIAMETER: 8.51mm (0.335 in.)
ROLLER WIDTH: 7.75mm (0.305 in.)
TENSILE: 1820 kilos (4000 lbs.)

TYPE B

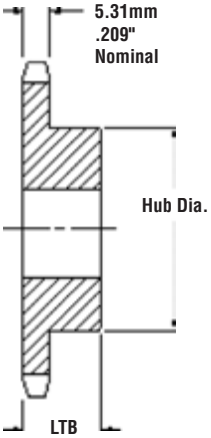

Single-Type B — Nylon

Number of Teeth	Catalog Number	Diameter		Type	Bore (mm)		Hub (mm)	
		Outside	Pitch		Stock	Max	Diameter	LTB
11	08B11NM	52.4	45	B	12	20	34.93	22.23
12	08B12NM	56.4	49.1	B	12	25	39.67	22.23
13	08B13NM	60.4	53.1	B	12	25	39.67	22.23
14	08B14NM	64.4	57.1	B	12	25	42.86	22.23
15	08B15NM	68.4	61.1	B	12	30	46.02	22.23
16	08B16NM	72.5	65.1	B	15	35	50.8	22.23
17	08B17NM	76.5	69.1	B	15	40	53.98	25.4
18	08B18NM	80.5	73.1	B	15	40	58.72	25.4
19	08B19NM	84.5	77.2	B	15	45	63.5	25.4
20	08B20NM	88.6	81.2	B	15	45	66.68	25.4
21	08B21NM	92.6	85.2	B	15	45	69.85	25.4
22	08B22NM	96.6	89.2	B	15	45	73.03	25.4
23	08B23NM	100.6	93.3	B	15	50	76.2	25.4
24	08B24NM	104.7	97.3	B	15	50	82.55	25.4
25	08B25NM	108.7	101.3	B	15	55	82.55	25.4
26	08B26NM	112.7	105.3	B	15	55	82.55	25.4
27	08B27NM	116.8	109.4	B	15	55	82.55	25.4
28	08B28NM	120.8	113.4	B	15	55	82.55	25.4
29	08B29NM	124.8	117.5	B	15	55	82.55	25.4
30	08B30NM	128.9	121	B	15	55	82.55	25.4

Notes:

- Standard Material: Natural Nylon.
- Other numbers of teeth and hub styles available.
- Available as stock drilled bore, finished drive bore with keyway and setscrews, or idler bore.
- A Plate and C Style also available.
- Maximum bores shown will accommodate standard keyseat and setscrew over keyseat. Slightly larger bores are possible with no keyseat, shallow keyseat, or setscrew at angle to keyseat.

Metric Plastic Sprockets

0.625 INCH (15.88mm) PITCH SIMPLEX

ISO **10B-1**
METRIC **50**

CHAIN DATA:
BS 228/11ISO 10B-1
PITCH: 15.88mm (0.625 in.)
ROLLER DIAMETER: 10.16mm (0.400 in.)
ROLLER WIDTH: 9.65mm (0.380 in.)
TENSILE: 2270 kilos (4500 lbs.)

TYPE B

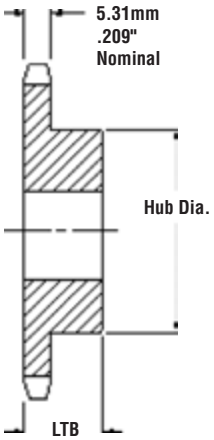

Single-Type B — Nylon

Number of Teeth	Catalog Number	Diameter		Type	Bore (mm)		Hub (mm)	
		Outside	Pitch		Stock	Max	Diameter	LTB
11	10B11NM	66	56.4	B	15	25	44.45	25.4
12	10B12NM	71	61.3	B	15	30	50.39	25.4
13	10B13NM	76	66.3	B	15	30	47.63	25.4
14	10B14NM	81	71.3	B	15	35	53.98	25.4
15	10B15NM	86	76.4	B	15	35	60.33	25.4
16	10B16NM	91.1	81.4	B	15	40	63.5	25.4
17	10B17NM	96.1	86.4	B	15	40	68.25	25.4
18	10B18NM	101.1	91.4	B	15	45	73.03	25.4
19	10B19NM	106.1	96.4	B	15	50	76.2	25.4
20	10B20NM	111.2	101.5	B	20	50	76.2	25.4
21	10B21NM	116.2	106.5	B	20	50	76.2	25.4
22	10B22NM	121.2	111.6	B	20	50	76.2	25.4
23	10B23NM	126.3	116.6	B	20	50	76.2	25.4
24	10B24NM	131.3	121.6	B	20	50	76.2	31.75
25	10B25NM	136.3	126.7	B	20	50	76.2	31.75
26	10B26NM	141.4	131.7	B	20	50	76.2	31.75
27	10B27NM	146.4	136.8	B	20	50	76.2	31.75
28	10B28NM	151.5	141.8	B	20	50	76.2	31.75
29	10B29NM	155.49	146.8	B	20	50	76.2	31.75
30	10B30NM	161.6	151.9	B	20	55	82.55	31.75

Notes:

- Standard Material: Natural Nylon.
- Other numbers of teeth and hub styles available.
- Available as stock drilled bore, finished drive bore with keyway and setscrews, or idler bore.
- A Plate and C Style also available.
- Maximum bores shown will accommodate standard keyseat and setscrew over keyseat. Slightly larger bores are possible with no keyseat, shallow keyseat, or setscrew at angle to keyseat.

Metric
Plastic Sprockets

ISO **12B-1**
METRIC **60**

0.750 INCH (19.05mm) PITCH SIMPLEX

CHAIN DATA:
BS 228/13ISO 12B-1
PITCH: 19.05mm (0.750 in.)
ROLLER DIAMETER: 12.07mm (0.475 in.)
ROLLER WIDTH: 11.68mm (0.460 in.)
TENSILE: 2950 kilos (6500 lbs.)

TYPE B

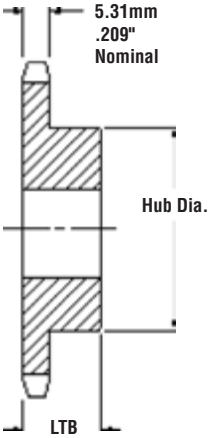

Single-Type B — Nylon

Number of Teeth	Catalog Number	Diameter		Type	Bore (mm)		Hub (mm)	
		Outside	Pitch		Stock	Max	Diameter	LTB
11	12B11NM	79.4	67.64	B	18	30	52.37	31.75
12	12B12NM	85.4	73.61	B	18	35	60.32	31.75
13	12B13NM	91.3	79.6	B	18	35	59.51	31.75
14	12B14NM	97.4	85.6	B	18	40	65.07	31.75
15	12B15NM	103.4	91.6	B	18	45	73.03	31.75
16	12B16NM	109.4	97.6	B	18	50	77.77	31.75
17	12B17NM	115.4	103.7	B	18	55	82.55	31.75
18	12B18NM	121.5	109.7	B	18	60	88.9	31.75
19	12B19NM	127.5	115.7	B	18	60	88.9	31.75
20	12B20NM	133.5	121.8	B	18	65	98.43	31.75
21	12B21NM	139.6	127.9	B	18	70	101.6	31.75
22	12B22NM	145.6	133.9	B	18	70	101.6	31.75
23	12B23NM	151.6	139.9	B	18	70	101.6	31.75
24	12B24NM	157.7	145.9	B	18	70	101.6	31.75
25	12B25NM	163.7	152	B	18	70	101.6	31.75
26	12B26NM	169.8	158	B	18	70	101.6	31.75
27	12B27NM	175.8	164.1	B	18	70	101.6	31.75
28	12B28NM	181.9	170.2	B	18	70	101.6	31.75
29	12B29NM	186.6	176.2	B	18	70	101.6	31.75
30	12B30NM	194	182.2	B	18	70	101.6	31.75

Notes:

- Standard Material: Natural Nylon.
- Other numbers of teeth and hub styles available.
- Available as stock drilled bore, finished drive bore with keyway and setscrews, or idler bore.
- A Plate and C Style also available.
- Maximum bores shown will accommodate standard keyseat and setscrew over keyseat. Slightly larger bores are possible with no keyseat, shallow keyseat, or setscrew at angle to keyseat.

Non-Metallic Teeth – Ball Bearing Type

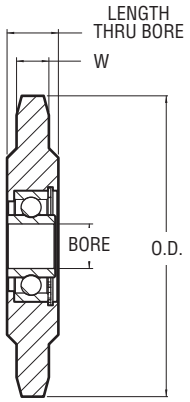

Ball Bearing Idler Sprockets — Non Metallic Teeth

No. Teeth	Catalog Number	Bearing Type	Chain Size	O.D	Stock Bore	Length Thru Bore	W	Wt. Lbs.
17	40BB17NM 1/2	Ball	40	2.97	0.510	0.72	0.284	0.24
18	40BB18NM 5/8	Ball	40	3.14	0.638	0.72	0.284	0.23
17	50BB17NM 1/2	Ball	50	3.72	0.510	0.72	0.343	0.29
18	50BB18NM 5/8	Ball	50	3.92	0.638	0.72	0.343	0.29
15	60BB15NM 1/2	Ball	60	3.98	0.510	0.72	0.459	0.32
16	60BB16NM 5/8	Ball	60	4.22	0.638	0.72	0.459	0.33
12	80BB12NM 3/4	Ball	80	4.33	0.750	0.61	0.575	0.44

Note: .510 Stock Bore is +.005 .000; .638 Stock Bore Is +.005 .000;
.750 Stock Bore Is +.005 .000

Radial Load Capacity in Pounds at Various Speeds Ball Bearings

Idler Size	RPM					
	100	500	1000	1500	2000	2500
.375" Bore	620	363	288	252	229	212
.5" & .625" Bore	800	460	360	320	290	270
.75" Bore	1290	755	600	523	478	440

Ratings shown above are based on an average bearing life of 2500 hours.

Double Pitch
Plastic Sprockets

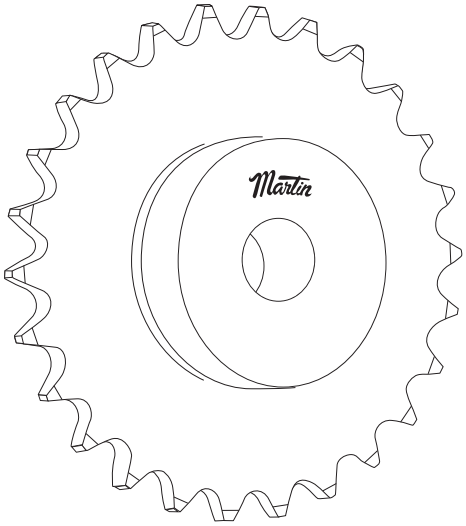

Standard Roller
Double Duty

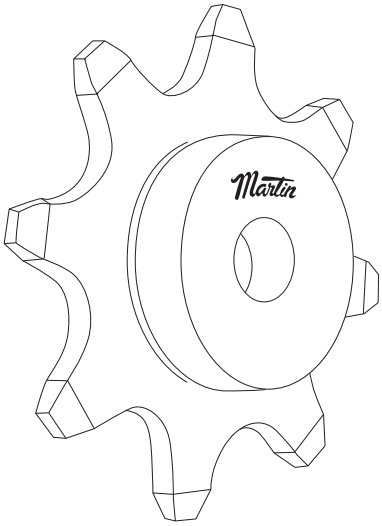

Carrier
Roller

Double-Pitch Sprockets

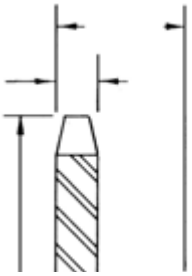

Standard Rollers

Carrier Rollers

Series C-2000 chains have rollers of the same diameters and widths as American Standard Roller Chains of one half the conveyor chain pitch. Engaged by every other tooth, double duty sprockets have two teeth per chain pitch. During each revolution only half the teeth function effectively. Sprockets with odd numbers of teeth will allow any given tooth to engage only on every other revolution, automatically increasing sprocket life. Double duty sprockets with even number of teeth may be manually advanced one tooth periodically to increase sprocket life. Martin Stock C-2000 series sprockets are furnished double duty only.

Sprockets for the C-2002 series chain with carrier rollers are cut with space cutters or standard hobs for the American Standard roller Chain of the same diameter. Each sprocket tooth meshes with these chains. Double-duty sprockets cannot be made for double pitch chain with Carrier Rollers.

NOTE: For drives of 31 teeth or more we recommend using Standard sprockets with series C-2000 chains.

All altered double pitch sprockets requiring a keyway will be furnished with keyway on center line of tooth, unless otherwise specified.

Double Pitch Plastic Sprockets

Martin manufactures sprockets for double pitch roller chain. Double Pitch Sprockets reduce sprocket contact with the chain by half, engaging every other sprocket tooth. This reduces wear and thus increases sprocket longevity.

The standard material used on Martin's non-metallic Double Pitch Sprocket is UHMW. Other materials such as nylon or acetal may be requested. Consult Martin for selection assistance when special applications are required.

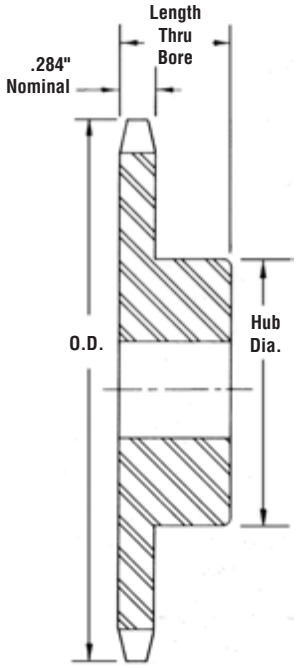

TYPE B

1-Inch Double-Pitch Conveyor or Drive Series — Standard Roller Double Pitch — 2040/C2040 — Nylon

Number of Teeth	Catalog Number	Diameter		Type	Bore (in)		Hub (in)	
		Outside	Pitch		Stock	Max	Diameter	LTB
11	2040B11NM	1.85	2	B	0.5	0.813	1.375*	0.875
12	2040B12NM	2	2.17	B	0.5	0.813	1.563*	0.875
13	2040B13NM	2.15	2.33	B	0.5	0.656	1.563*	0.875
14	2040B14NM	2.31	2.49	B	0.5	1.031	1.688*	0.875
15	2040B15NM	2.46	2.65	B	0.5	1.219	1.719	0.875
16	2040B16NM	2.61	2.81	B	0.5	1.281	1.875	0.875
17	2040B17NM	2.77	2.98	B	0.5	1.313	2.047	1
18	2040B18NM	2.92	3.14	B	0.5	1.469	2.219	1
19	2040B19NM	3.08	3.3	B	0.5	1.625	2.375	1
20	2040B20NM	3.24	3.46	B	0.5	1.625	2.547	1
21	2040B21NM	3.39	3.62	B	0.5	1.781	2.703	1
22	2040B22NM	3.55	3.78	B	0.5	1.875	2.875	1
23	2040B23NM	3.71	3.94	B	0.5	2	3	1
24	2040B24NM	3.86	4.1	B	0.5	2.25	3.25	1
25	2040B25NM	4.02	4.26	B	0.5	2.25	3.25	1
26	2040B26NM	4.18	4.42	B	0.5	2.25	3.25	1
28	2040B28NM	4.49	4.74	B	0.5	2.25	3.25	1
30	2040B30NM	4.81	5.06	B	0.5	2.25	3.25	1

* Recessed groove in hub for chain clearance.

Conveyor or Drive Series — Carrier Roller Double Pitch — 2042/C2042 — Nylon

Number of Teeth	Catalog Number	Diameter		Type	Bore (in)		Hub (in)	
		Outside	Pitch		Stock	Max	Diameter	LTB
8	2042B8NM	2.61	3.01	B	0.5	1.281	1.875	0.875
9	2042B9NM	2.92	3.35	B	0.5	1.469	2.219	0.875
10	2042B10NM	3.24	3.68	B	0.5	1.75	2.547	1
11	2042B11NM	3.55	4	B	0.5	1.875	2.625	1
12	2042B12NM	3.86	4.33	B	0.5	2.25	3.063	1
13	2042B13NM	4.18	3.66	B	0.5	2.25	3.25	1
14	2042B14NM	4.49	4.98	B	0.5	2.25	3.25	1
15	2042B15NM	4.81	5.3	B	0.5	2.25	3.25	1
16	2042B16NM	5.13	5.63	B	0.5	2.25	3.25	1
17	2042B17NM	5.44	5.95	B	0.5	2.25	3.25	1
18	2042B18NM	5.76	6.27	B	0.5	2.25	3.25	1
19	2042B19NM	6.08	6.59	B	0.5	2.25	3.25	1
20	2042B20NM	6.39	6.91	B	0.5	2.375	3.5	1.125
21	2042B21NM	6.71	7.24	B	0.5	2.375	3.5	1.125
22	2042B22NM	7.01	7.56	B	0.5	2.375	3.5	1.125
23	2042B23NM	7.34	7.88	B	0.5	2.375	3.5	1.125
24	2042B24NM	7.66	8.2	B	0.5	2.375	3.5	1.125
25	2042B25NM	7.98	8.52	B	0.5	2.375	3.5	1.125
26	2042B26NM	8.3	8.84	B	0.5	2.375	3.5	1.125
28	2042B28NM	8.93	9.48	B	0.5	2.375	3.5	1.125
30	2042B30NM	9.57	10.11	B	0.5	2.375	3.5	1.125

* Recessed groove in hub for chain clearance.

- Maximum bores shown will accommodate standard keyseat and setscrew over keyseat. Slightly larger bores are possible with no keyseat, shallow keyseat, or setscrew at angle to keyseat.

Double Pitch
Plastic Sprockets

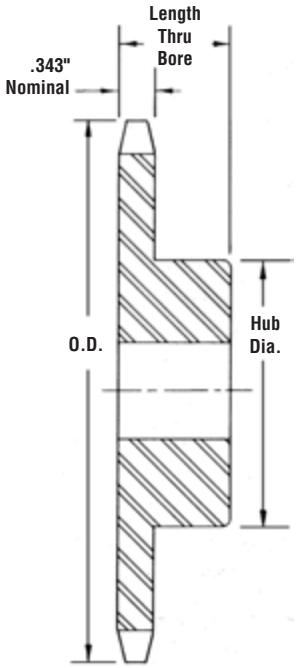

TYPE B

1¼-Inch Double-Pitch
Conveyor or Drive Series — Standard Roller
Double Pitch — 2050/C2050 — Nylon

Number of Teeth	Catalog Number	Diameter		Type	Bore (in)		Hub (in)	
		Outside	Pitch		Stock	Max	Diameter	LTB
11	2050B11NM	2.315	2.5	B	0.5	0.813	1.750*	1
12	2050B12NM	2.5	2.71	B	0.5	1	1.984	1
13	2050B13NM	2.69	2.91	B	0.5	1.219	1.719	1
14	2050B14NM	2.881	3.11	B	0.5	1.281	1.938	1
15	2050B15NM	3.073	3.32	B	0.5	1.406	2.156	1
16	2050B16NM	3.266	3.52	B	0.5	1.594	2.359	1
17	2050B17NM	3.46	3.72	B	0.5	1.75	2.563	1
18	2050B18NM	3.655	3.92	B	0.5	1.781	2.781	1
19	2050B19NM	3.85	4.12	B	0.5	1.969	2.984	1
20	2050B20NM	4.045	4.32	B	0.5	2	3	1
21	2050B21NM	4.241	4.52	B	0.5	2	3	1
22	2050B22NM	4.437	4.72	B	0.5	2	3	1
23	2050B23NM	4.633	4.92	B	0.5	2	3	1
24	2050B24NM	4.83	5.12	B	0.5	2	3	1.25
25	2050B25NM	5.026	5.32	B	0.5	2	3	1.25
26	2050B26NM	5.223	5.52	B	0.5	2	3	1.25
28	2050B28NM	5.617	5.92	B	0.5	2	3	1.25
30	2050B30NM	6.012	6.32	B	0.5	2.25	3.25	1.25

* Recessed groove in hub for chain clearance.

Conveyor or Drive Series — Carrier Roller
Double Pitch — 2052/C2052 — Nylon

Number of Teeth	Catalog Number	Diameter		Type	Bore (in)		Hub (in)	
		Outside	Pitch		Stock	Max	Diameter	LTB
8	2052B08NM	3.266	3.77	B	0.5	1.594	2.359	1
9	2052B09NM	3.655	4.19	B	0.5	1.781	2.781	1
10	2052B10NM	4.045	4.6	B	0.5	2	3	1
11	2052B11NM	4.437	5.01	B	0.5	2	3	1
12	2052B12NM	4.83	5.42	B	0.5	2	3	1.25
13	2052B13NM	5.223	5.82	B	0.5	2	3	1.25
14	2052B14NM	5.617	6.23	B	0.5	2	3	1.25
15	2052B15NM	6.012	6.63	B	0.5	2.25	3.25	1.25
16	2052B16NM	6.407	7.03	B	0.5	2.25	3.25	1.25
17	2052B17NM	6.803	7.44	B	0.5	2.25	3.25	1.25
18	2052B18NM	7.198	7.84	B	0.5	2.25	3.25	1.25
19	2052B19NM	7.595	8.24	B	0.5	2.25	3.25	1.25
20	2052B20NM	7.991	8.64	B	0.5	2.25	3.25	1.25
21	2052B21NM	8.387	9.04	B	0.5	2.25	3.25	1.25
22	2052B22NM	8.783	9.44	B	0.5	2.25	3.25	1.25
23	2052B23NM	9.18	9.85	B	0.5	2.75	3.75	1.25
24	2052B24NM	9.577	10.25	B	0.5	2.75	3.75	1.25
25	2052B25NM	9.973	10.65	B	0.5	2.75	3.75	1.25
26	2052B26NM	10.37	11.05	B	0.5	2.75	3.75	1.25
28	2052B28NM	11.164	11.84	B	0.5	2.75	3.75	1.25
30	2052B30NM	11.958	12.64	B	0.5	2.75	3.75	1.25

* Recessed groove in hub for chain clearance.

- Maximum bores shown will accommodate standard keyseat and setscrew over keyseat. Slightly larger bores are possible with no keyseat, shallow keyseat, or setscrew at angle to keyseat.

1½-Inch Double-Pitch
Conveyor or Drive Series — Standard Roller
Double Pitch — 2060/C2060 — Nylon

Number of Teeth	Catalog Number	Diameter		Type	Bore (in)		Hub (in)	
		Outside	Pitch		Stock	Max	Diameter	LTB
11	2060B11NM	2.773	3	B	0.5	1	2.063*	1.25
12	2060B12NM	3	3.25	B	0.5	1.25	2.375*	1.25
13	2060B13NM	3.228	3.49	B	0.5	1.313	2.078	1.25
14	2060B14NM	3.457	3.74	B	0.5	1.563	2.328	1.25
15	2060B15NM	3.699	3.98	B	0.5	1.75	2.594	1.25
16	2060B16NM	3.92	4.22	B	0.5	1.844	2.844	1.25
17	2060B17NM	4.152	4.46	B	0.5	2.094	3.094	1.25
18	2060B18NM	4.386	4.7	B	0.5	2.281	3.344	1.25
19	2060B19NM	4.62	4.94	B	0.5	2.344	3.5	1.25
20	2060B20NM	4.854	5.19	B	0.5	2.563	3.875	1.25
21	2060B21NM	5.089	5.43	B	0.5	2.75	4	1.25
22	2060B22NM	5.324	5.67	B	0.5	2.75	4	1.25
23	2060B23NM	5.56	5.91	B	0.5	2.75	4	1.25
24	2060B24NM	5.796	6.15	B	0.5	2.75	4	1.25
25	2060B25NM	6.032	6.39	B	0.5	2.75	4	1.25
26	2060B26NM	6.268	6.63	B	0.5	2.75	4	1.25
28	2060B28NM	6.741	7.11	B	0.5	2.75	4	1.25
30	2060B30NM	7.215	7.59	B	0.5	2.75	4	1.25

* Recessed groove in hub for chain clearance.

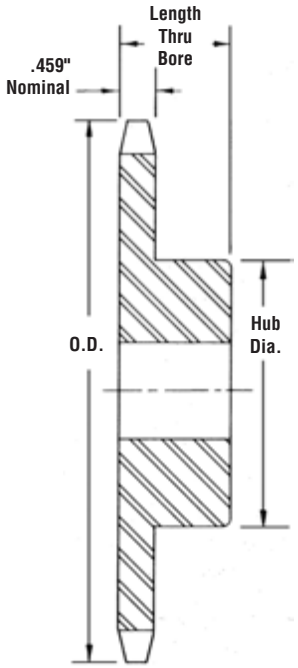

TYPE B

Conveyor or Drive Series — Carrier Roller
Double Pitch — 2062/C2062 — Nylon

Number of Teeth	Catalog Number	Diameter		Type	Bore (in)		Hub (in)	
		Outside	Pitch		Stock	Max	Diameter	LTB
8	2062B08NM	3.92	4.52	B	0.5	1.844	2.844	1.25
9	2062B09NM	4.386	5.02	B	0.5	2.281	3.344	1.25
10	2062B10NM	4.854	5.52	B	0.5	2.563	3.828	1.25
11	2062B11NM	5.324	6.01	B	0.5	2.75	4	1.25
12	2062B12NM	5.796	6.5	B	0.5	2.75	4	1.25
13	2062B13NM	6.268	6.99	B	0.5	2.75	4	1.25
14	2062B14NM	6.741	7.47	B	0.5	2.75	4	1.25
15	2062B15NM	7.215	7.96	B	0.5	2.25	4	1.25
16	2062B16NM	7.689	8.44	B	0.5	2.25	4	1.25
17	2062B17NM	8.163	8.92	B	0.5	2.25	4	1.25
18	2062B18NM	8.638	9.41	B	0.5	2.25	4	1.25
19	2062B19NM	9.113	9.89	B	0.5	2.25	4.25	1.25
20	2062B20NM	9.589	10.37	B	0.5	2.25	4.25	1.25
21	2062B21NM	10.064	10.85	B	0.5	2.25	4.25	1.25
22	2062B22NM	10.54	11.33	B	0.5	2.25	4.25	1.25
23	2062B23NM	11.016	11.81	B	0.5	2.75	4.25	1.25
24	2062B24NM	11.492	12.29	B	0.5	2.75	4.25	1.25
25	2062B25NM	11.968	12.77	B	0.5	2.75	4.25	1.25
26	2062B26NM	12.444	13.25	B	0.5	2.75	4.25	1.75
28	2062B28NM	13.397	14.21	B	0.5	2.75	4.25	1.75
30	2062B30NM	14.35	15.17	B	0.5	2.75	4.25	1.75

* Recessed groove in hub for chain clearance.

- Maximum bores shown will accommodate standard keyseat and setscrew over keyseat. Slightly larger bores are possible with no keyseat, shallow keyseat, or setscrew at angle to keyseat.

Double Pitch
Plastic Sprockets

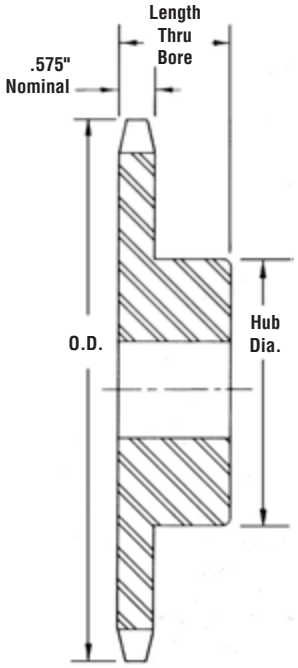

TYPE B

2-Inch Double-Pitch
Conveyor or Drive Series — Standard Roller
Double Pitch — 2080/C2080 — Nylon

Number of Teeth	Catalog Number	Diameter		Type	Bore (in)		Hub (in)	
		Outside	Pitch		Stock	Max	Diameter	LTB
11	2080B11NM	3.694	4.01	B	0.5	1.5	2.813*	1.625
12	2080B12NM	4	4.33	B	0.5	1.688	3.125*	1.625
13	2080B13NM	4.304	4.66	B	0.5	1.781	2.75	1.5
14	2080B14NM	4.61	4.98	B	0.5	2.125	3.125	1.5
15	2080B15NM	4.917	5.3	B	0.5	2.281	3.438	1.5
16	2080B16NM	5.226	5.63	B	0.5	2.531	3.75	1.5
17	2080B17NM	5.53	5.95	B	0.5	2.75	4	1.5
18	2080B18NM	5.848	6.27	B	0.5	2.75	4.25	1.5
19	2080B19NM	6.16	6.59	B	0.5	2.75	4.25	1.5
20	2080B20NM	6.472	6.91	B	0.5	2.75	4.25	1.5
21	2080B21NM	6.785	7.23	B	0.5	2.75	4.25	1.5
22	2080B22NM	7.099	7.56	B	0.5	2.75	4.25	1.75
23	2080B23NM	7.413	7.88	B	0.5	2.75	4.25	1.75
24	2080B24NM	7.727	8.2	B	0.5	2.75	4.25	1.75
25	2080B25NM	8.042	8.52	B	0.5	2.75	4.25	1.75
26	2080B26NM	8.357	8.84	B	0.5	3.25	4.75	2
28	2080B28NM	8.988	9.48	B	0.5	3.25	4.75	2
30	2080B30NM	9.62	10.11	B	0.5	3.25	4.75	2

* Recessed groove in hub for chain clearance.

Conveyor or Drive Series — Carrier Roller
Double Pitch — 2082/C2082 — Nylon

Number of Teeth	Catalog Number	Diameter		Type	Bore (in)		Hub (in)	
		Outside	Pitch		Stock	Max	Diameter	LTB
8	2082B08NM	5.226	6.03	B	0.5	2.531	3.75	1.75
9	2082B09NM	5.848	6.7	B	0.5	2.75	4.25	1.75
10	2082B10NM	6.472	7.36	B	0.5	2.75	4.25	1.75
11	2082B11NM	7.099	8.01	B	0.5	2.75	4.25	1.75
12	2082B12NM	7.727	8.66	B	0.5	2.75	4.25	1.75
13	2082B13NM	8.357	9.31	B	0.5	2.75	4.75	2
14	2082B14NM	8.988	9.96	B	0.5	2.75	4.75	2
15	2082B15NM	9.62	10.61	B	0.5	2.75	4.75	2
16	2082B16NM	10.252	11.25	B	0.5	2.75	4.75	2
17	2082B17NM	10.885	11.9	B	0.5	2.75	4.75	2
18	2082B18NM	11.518	12.54	B	0.5	2.75	4.75	2
19	2082B19NM	12.151	13.19	B	0.5	2.75	4.75	2
20	2082B20NM	12.785	13.83	B	0.5	2.75	4.75	2
21	2082B21NM	13.419	14.47	B	0.5	2.75	4.75	2
22	2082B22NM	14.053	15.11	B	0.5	2.75	4.75	2
23	2082B23NM	14.688	15.75	B	0.5	2.75	4.75	2
24	2082B24NM	15.323	16.39	B	0.5	2.75	4.75	2
25	2082B25NM	15.958	17.03	B	0.5	2.75	4.75	2
26	2082B26NM	16.593	17.67	B	0.5	3.5	5.25	2
28	2082B28NM	17.863	18.95	B	0.5	3.5	5.25	2
30	2082B30NM	19.134	20.23	B	0.5	3.5	5.25	2

* Recessed groove in hub for chain clearance.

- Maximum bores shown will accommodate standard keyseat and setscrew over keyseat. Slightly larger bores are possible with no keyseat, shallow keyseat, or setscrew at angle to keyseat.

Mill Duty Plastic Sprockets

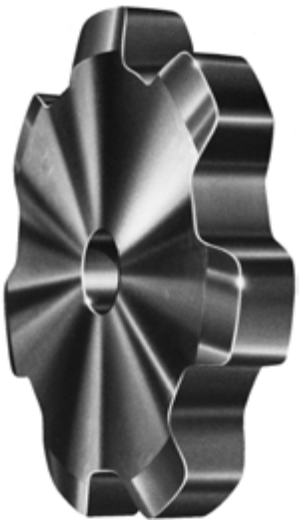

Conveyor Style Tooth for Chains:
78 — 82 — 124 — 132

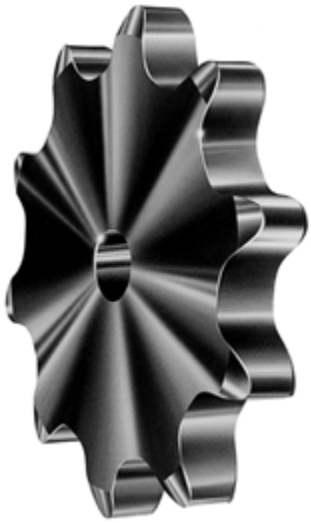

Driver Style Tooth for Chains:
55 — 1030

Typical "Drive" & "Conveyor" Sprocket Tooth Form

NOTE: All Martin Accu-Torch Sprockets have chamfered teeth for proper chain engagement.

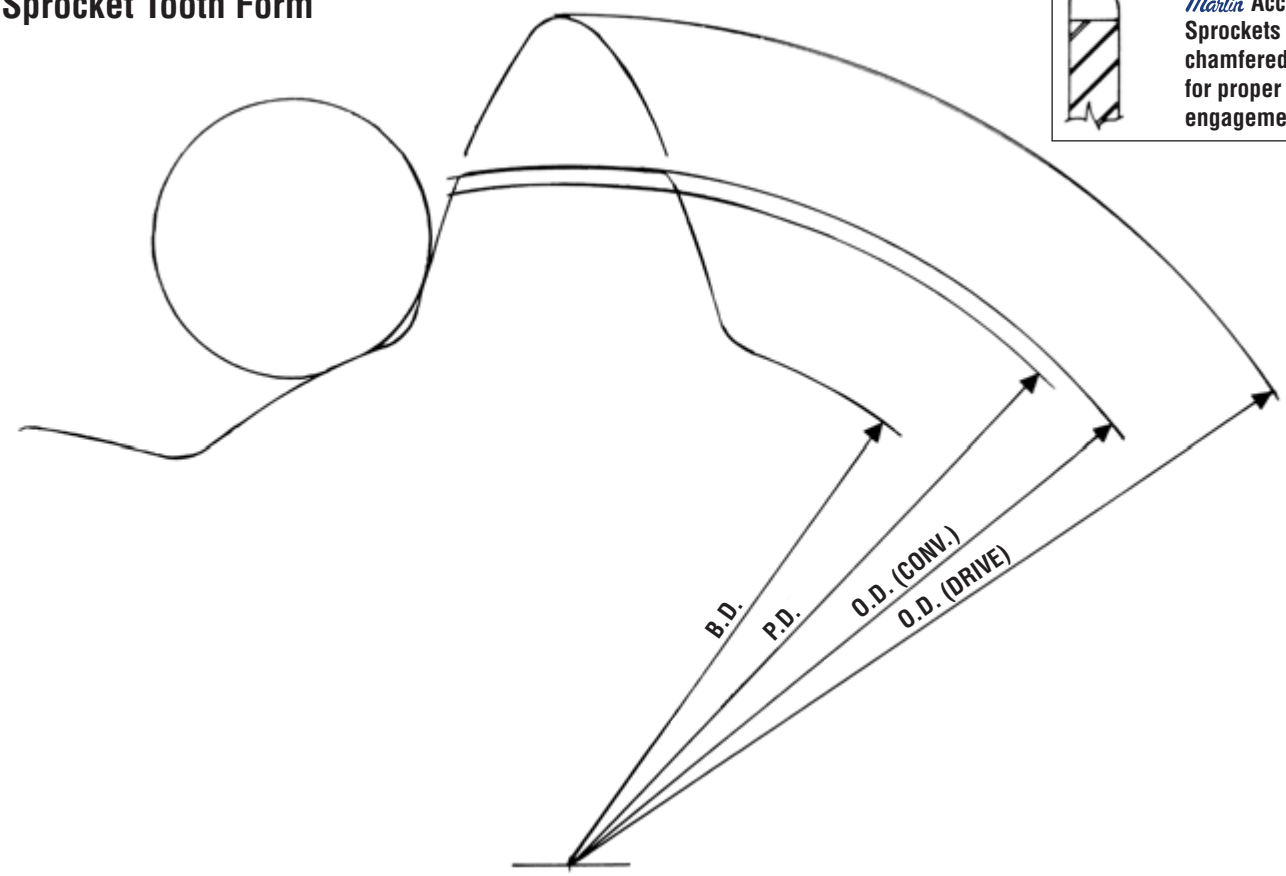

Mill Duty Sprockets are not intended to replace cut tooth roller chain sprockets.

Mill Duty
Plastic Sprockets

Mill Duty (also known as Agricultural Chain or AG Chain) Sprockets are machined from UHMW. These non-metallic sprockets are lighter in weight than standard steel sprockets. Non-metallic sprockets are also corrosion resistant, require little or no lubrication, and are generally more durable than traditional steel sprockets.

Martin offers Mill Duty Sprockets in all popular sizes as well as custom made-to-order sprockets. Standard sizes include 55 Series, 78 Series, 82 Series, and 132 Series. Sprockets can be manufactured in A, B, C. & D styles, as well as Split and special sprockets styles.

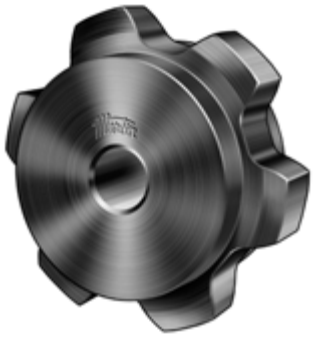

Sprockets Available to fit Standard Chain Sizes

25	95R	WD-120	458	CS730	D963R
32	102B	H121	468	823	E963R
42	H102	SD121	WD-480	825	F963R
45	102.5	WD-122	483	830	998
S51	103	WD-123	520	844	1030
51	H104	WD-124	531	856	1036
52	W-106	130	625R	859	1113
55	S-110	132	667	F912R	1120
D60	WD-110	183	678	E922	1131
62	111SP	188	698	F922	F1222
67	111	194	CS720S	925R	2124
78	WD-112	196	720S	933	2180
W-78	WD-116	197	730	951	4850
94R	WD-119	348	A730	B963R	9250

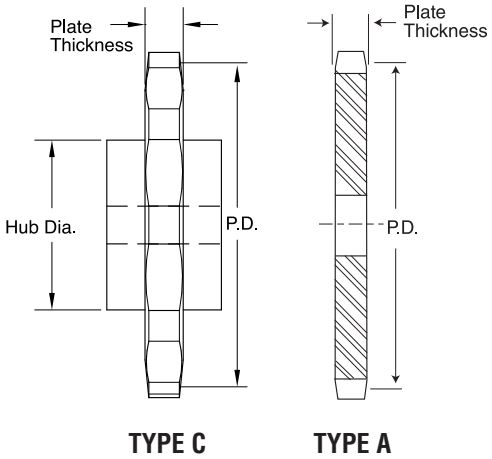

55 **SERIES PLASTIC SPROCKETS FOR CHAINS:**
C55, CA550, CA555, 55, 16D

PLATE THICKNESS 0.625"
ROLLER DIAMETER 0.7187"

Type C — 1.631" Pitch								Type A		
Number of Teeth	Catalog Number	Pitch Diameter	Type	Stock Bore	Max. Bore	Hub Diameter	LTB	Catalog Number	Type	Stock Bore
6	55C6NM	3.26	C	0.5	1	1.75	1.75	55A6NM	A	0.5
7	55C7NM	3.76	C	0.5	1	2	1.75	55A7NM	A	0.5
8	55C8NM	4.26	C	0.5	1.25	2.75	2	55A8NM	A	0.5
9	55C9NM	4.77	C	0.5	1.5	3	2.625	55A9NM	A	0.5
10	55C10NM	5.28	C	0.5	2	3.5	2	55A10NM	A	0.5
11	55C11NM	5.79	C	1	2.5	4	2.625	55A11NM	A	1
12	55C12NM	6.3	C	1	2.5	4	2.688	55A12NM	A	1
13	55C13NM	6.82	C	1	2.5	4	2.688	55A13NM	A	1
14	55C14NM	7.33	C	1	2.5	4	2.625	55A14NM	A	1
15	55C15NM	7.84	C	1	2.5	4	2.625	55A15NM	A	1
16	55C16NM	8.36	C	1	2.5	4	2.625	55A16NM	A	1
17	55C17NM	8.88	C	1	3	4.5	2.625	55A17NM	A	1
18	55C18NM	9.39	C	1	3	4.5	2.625	55A18NM	A	1
19	55C19NM	9.9	C	1	3	4.5	2.625	55A19NM	A	1
20	55C20NM	10.43	C	1	3.5	5	3.188	55A20NM	A	1
21	55C21NM	10.94	C	1	3.5	5	3.125	55A21NM	A	1
22	55C22NM	11.43	C	1	3.5	5	3.188	55A22NM	A	1
23	55C23NM	11.97	C	1	3.5	5	3.188	55A23NM	A	1
24	55C24NM	12.5	C	1	3.5	5	3.188	55A24NM	A	1

Mill Duty Plastic Sprockets

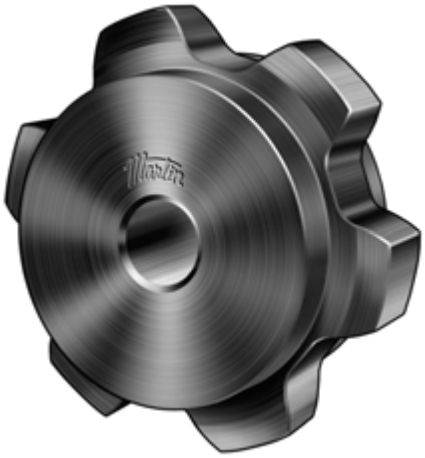

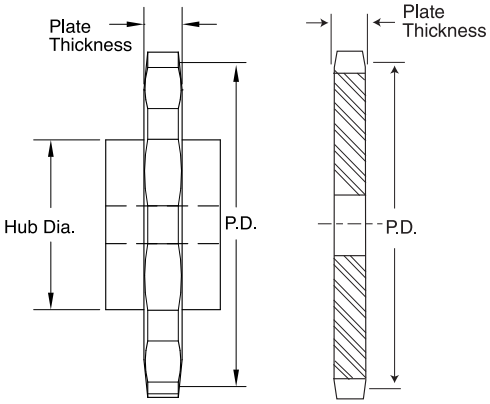

TYPE C **TYPE A**

78 **SERIES PLASTIC SPROCKETS FOR CHAINS:** 78, H74, 75, H75, H78, H78LR, (14, 18 TEETH ONLY), H78RT, H78SR, H79, 88, 188, S188, S78, R588, RR588, R778, RR778, 988, IS880, 87R, IS881, 81X, IS882, 433½, LXS881, LXS886, US881, LXS887, LXS882, 488, XS578, SS188, C188, US278R, US882, 578R, 588R

Type C — 2.609" Pitch

PLATE THICKNESS 0.875"
ROLLER DIAMETER 0.875"

Type A

Number of Teeth	Catalog Number	Pitch Diameter	Type	Stock Bore	Max. Bore	Hub Diameter	LTB	Catalog Number	Type	Stock Bore
6	78C6NM	5.22	C	0.750	1.250	3.400	2.000	78A6NM	A	0.5
7	78C7NM	6.01	C	0.750	1.250	3.500	2.000	78A7NM	A	0.5
8	78C8NM	6.82	C	0.750	2.000	4.750	4.000	78A8NM	A	0.5
9	78C9NM	7.63	C	0.755	2.000	5.250	4.000	78A9NM	A	0.5
10	78C10NM	8.44	C	0.755	2.500	5.250	4.000	78A10NM	A	0.5
11	78C11NM	9.26	C	0.755	2.500	5.250	4.000	78A11NM	A	0.5
12	78C12NM	10.08	C	0.755	3.000	5.250	4.000	78A12NM	A	0.5
13	78C13NM	10.9	C	0.755	3.000	5.500	4.000	78A13NM	A	0.5
14	78C14NM	11.72	C	0.755	3.000	5.500	4.000	78A14NM	A	0.5
15	78C15NM	12.55	C	0.755	3.500	5.500	3.750	78A15NM	A	0.5
16	78C16NM	13.37	C	1.000	3.500	5.563	3.765	78A16NM	A	0.5
17	78C17NM	14.2	C	1.000	3.500	6.000	3.765	78A17NM	A	0.5
19	78C19NM	15.85	C	1.000	3.500	6.000	3.750	78A19NM	A	0.5
21	78C21NM	17.51	C	1.000	3.500	6.000	3.750	78A21NM	A	0.5
24	78C24NM	19.99	C	1.000	3.500	7.000	3.875	78A24NM	A	0.5
25	78C25NM	20.82	C	1.000	4.000	7.000	3.875	78A25NM	A	0.5
28	78C28NM	23.3	C	1.000	4.000	7.000	3.875	78A28NM	A	0.5
30	78C30NM	24.96	C	1.000	4.000	9.000	3.875	78A30NM	A	0.5
35	78C35NM	29.11	C	1.000	5.000	9.000	4.875	78A35NM	A	0.5
40	78C40NM	33.25	C	1.000	5.000	9.000	3.750	78A40NM	A	0.5
42	78C42NM	34.91	C	1.000	5.000	9.000	4.875	78A42NM	A	0.5
46	78C46NM	38.23	C	1.000	5.000	9.000	3.750	78A46NM	A	0.5

Mill Duty Plastic Sprockets – Split

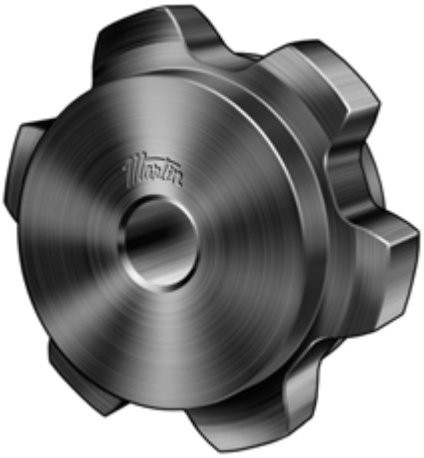

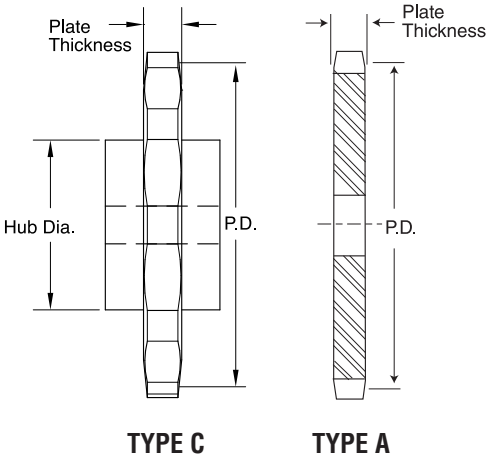

78 **SERIES PLASTIC SPROCKETS FOR CHAINS:** 78, H74, 75, H75, H78, H78LR, (14, 18 TEETH ONLY), H78RT, H78SR, H79, 88, 188, S188, S78, R588, RR588, R778, RR778, 988, IS880, 87R, IS881, 81X, IS882, 433½, LXS881, LXS886, US881, LXS887, LXS882, 488, XS578, SS188, C188, US278R, US882, 578R, 588R

Type C — 2.609" Pitch

PLATE THICKNESS 0.875"
ROLLER DIAMETER 0.875"

Number of Teeth	Catalog Number	Pitch Diameter	Type	Stock Bore	Max. Bore	Hub Diameter	LTB
6	78C6NMS	5.22	C	1	1.5	3.39	2.875
7	78C7NMS	6.01	C	1	2	4	2.875
8	78C8NMS	6.82	C	1	2	4	2.875
9	78C9NMS	7.63	C	1	2.125	5	2.875
10	78C10NMS	8.44	C	1	2.75	5	2.875
11	78C11NMS	9.26	C	1	2.75	5	2.875
12	78C12NMS	10.08	C	1	2.75	5	2.875
13	78C13NMS	10.09	C	1	2.75	5	2.875
14	78C14NMS	11.72	C	1	2.75	5	2.875
15	78C15NMS	12.55	C	1	2.75	5	2.875
16	78C16NMS	13.37	C	1	4	7	3.75
17	78C17NMS	14.2	C	1	4	7	3.875
18	78C18NMS	15.02	C	1	4	7	3.875
19	78C19NMS	15.85	C	1	4	7	3.875
21	78C21NMS	17.51	C	1.75	4.5	8.875	3.875
22	78C22NMS	18.33	C	1.75	4.5	8.875	3.875
24	78C24NMS	19.99	C	1.75	4.5	8.875	3.781
25	78C25NMS	20.82	C	1.75	4.5	8.875	3.875
27	78C27NMS	22.47	C	1.75	4.5	8.875	3.875
28	78C28NMS	23.3	C	1.75	4.5	8.875	3.875
30	78C30NMS	24.96	C	1.75	4.5	8.875	3.875
34	78C34NMS	28.28	C	1.75	4.5	8.875	3.875
40	78C40NMS	33.25	C	1.75	4.5	8.875	3.875
45	78C45NMS	37.4	C	1.75	6.5	12	3.875

Mill Duty Plastic Sprockets – Chainsaver

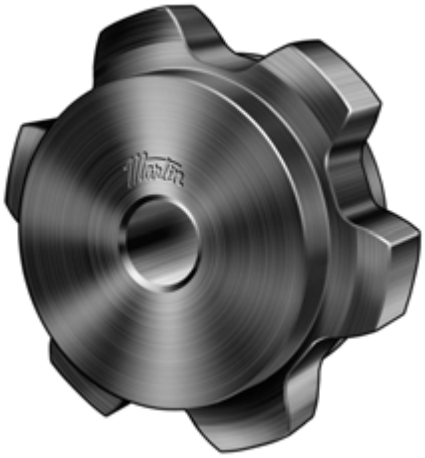

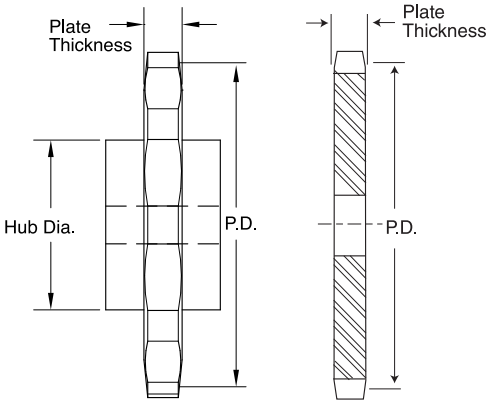

78 **SERIES PLASTIC SPROCKETS FOR CHAINS:** 78, H74, 75, H75, H78, H78LR, (14, 18 TEETH ONLY), H78RT, H78SR, H79, 88, 188, S188, S78, R588, RR588, R778, RR778, 988, IS880, 87R, IS881, 81X, IS882, 433½, LXS881, LXS886, US881, LXS887, LXS882, 488, XS578, SS188, C188, US278R, US882, 578R, 588R

Type C — 2.609" Pitch

PLATE THICKNESS 0.875"
ROLLER DIAMETER 0.875"

Number of Teeth	Catalog Number	Pitch Diameter	Type	Stock Bore	Max. Bore	Hub Diameter	LTB
4	78CS4NM	3.69	C	0.5	0.75	1.48	2
5	78CS5NM	4.44	C	0.75	1	2.46	2
6	78CS6NM	5.22	C	0.75	1.25	3.39	2
7	78CS7NM	6.01	C	0.75	1.75	4.29	2
8	78CS8NM	6.82	C	0.75	2.5	5.17	2
9	78CS9NM	7.63	C	0.75	3	6.04	2

Mill Duty
Plastic Sprockets

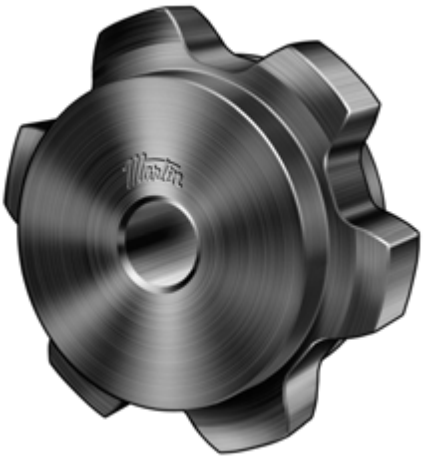

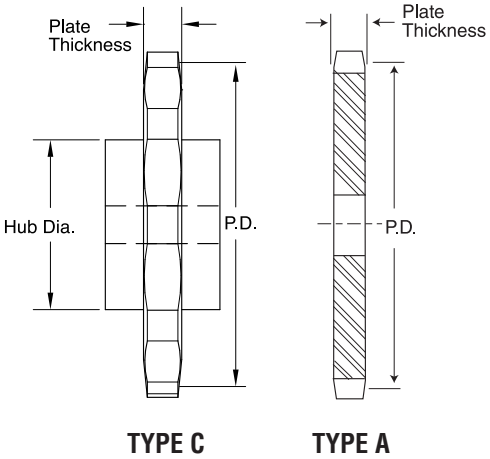

82 **SERIES PLASTIC SPROCKETS FOR CHAINS:**
H82, 131, 527R, 4103, WH82, S131, 527RX, C131, WR82, WS62, C9103, 382, 103 —SS131 —6131

Type C — 3.075" Pitch | **PLATE THICKNESS 1"** **ROLLER DIAMETER 1.2187"** | **Type A**

Number of Teeth	Catalog Number	Pitch Diameter	Type	Stock Bore	Max. Bore	Hub Diameter	LTB	Catalog Number	Type	Stock Bore
7	82C7NM	7.09	C	1	2.5	4	3.75	82A7NM	A	1
8	82C8NM	8.04	C	1	3	4.5	3.75	82A8NM	A	1
9	82C9NM	8.99	C	1	3	4.5	3.75	82A9NM	A	1
10	82C10NM	9.95	C	1	3	4.5	3.75	82A10NM	A	1
11	82C11NM	10.91	C	1	3.5	5	3.75	82A11NM	A	1
12	82C12NM	11.88	C	1	3.5	5	3.75	82A12NM	A	1
13	82C13NM	12.85	C	1	4	5	3.75	82A13NM	A	1
14	82C14NM	13.82	C	1	4	5.5	3.75	82A14NM	A	1
15	82C15NM	14.79	C	1	4	6	3.75	82A15NM	A	1
16	82C16NM	15.76	C	1	4	6	3.75	82A16NM	A	1
17	82C17NM	16.73	C	1	4	6	3.75	82A17NM	A	1
18	82C18NM	17.71	C	1	4	6	3.75	82A18NM	A	1

Mill Duty Plastic Sprockets

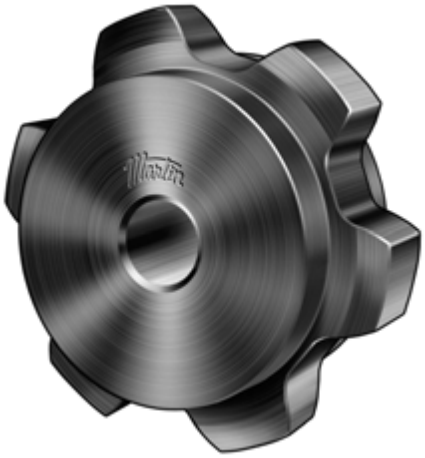

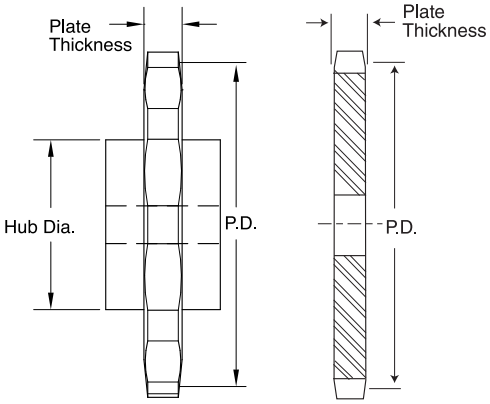

TYPE C **TYPE A**

1030 **SERIES PLASTIC SPROCKETS FOR CHAINS:** 1030, CHAMPIONNO.3, R1033, R1035, 1037, 1539, SS40, LXS1031, API3, LXS1032, SS40Hyp, IS1030, IS1031, IS1032, IS1037, US1031, 1190, SXX, 1190R, US1032

Type C — 3.075" Pitch

PLATE THICKNESS 1.25"
ROLLER DIAMETER 1.25"

Type A

Number of Teeth	Catalog Number	Pitch Diameter	Type	Stock Bore	Max. Bore	Hub Diameter	LTB	Catalog Number	Type	Stock Bore
8	1030C8NM	8.04	C	1	3	4.5	3.75	1030A8NM	A	1
9	1030C9NM	8.99	C	1	3	4.5	3.75	1030A9NM	A	1
10	1030C10NM	9.95	C	1	3	4.5	3.75	1030A10NM	A	1
11	1030C11NM	10.91	C	1	3.5	5	3.75	1030A11NM	A	1
12	1030C12NM	11.88	C	1	3.5	5	3.75	1030A12NM	A	1
13	1030C13NM	12.85	C	1	4	5.5	3.75	1030A13NM	A	1
15	1030C15NM	14.79	C	1	4	6	3.75	1030A15NM	A	1
17	1030C17NM	16.73	C	1	4	6	3.75	1030A17NM	A	1
19	1030C19NM	18.68	C	1	4	6	3.75	1030A19NM	A	1
21	1030C21NM	20.63	C	1	5	7	3.75	1030A21NM	A	1
24	1030C24NM	23.56	C	1	5	7	3.75	1030A24NM	A	1
25	1030C25NM	24.53	C	1	5	7	3.75	1030A25NM	A	1
28	1030C28NM	27.46	C	1	6	8	3.75	1030A28NM	A	1
30	1030C30NM	29.42	C	1	6	8	3.75	1030A30NM	A	1
35	1030C35NM	34.3	C	1	6	8	3.75	1030A35NM	A	1
40	1030C40NM	39.19	C	1	6	9	3.75	1030A40NM	A	1

Mill Duty
Plastic Sprockets

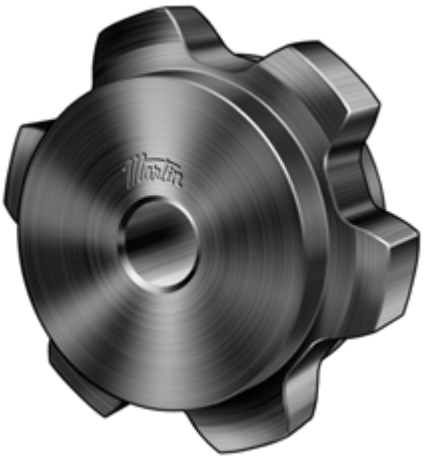

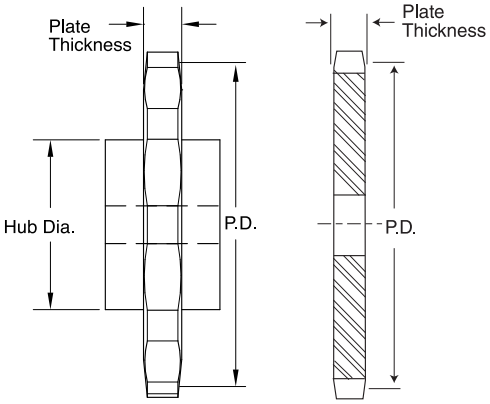

TYPE C **TYPE A**

124 SERIES PLASTIC SPROCKETS FOR CHAINS:
H124, W124, WS124, WR124, WH124

Type C — 4.000" Pitch

PLATE THICKNESS 1.5"
ROLLER DIAMETER 1.5"

Type A

Number of Teeth	Catalog Number	Pitch Diameter	Type	Stock Bore	Max. Bore	Hub Diameter	LTB	Catalog Number	Type	Stock Bore
6	124C6NM	8	C	1	3	4.5	3.75	124A6NM	A	1
7	124C7NM	9.22	C	1	3	5.75	4.5	124A7NM	A	1
8	124C8NM	10.45	C	1	3.5	5	4	124A8NM	A	1
9	124C9NM	11.7	C	1	3.5	5.75	4.5	124A9NM	A	1
10	124C10NM	12.94	C	1	4	5.75	4.5	124A10NM	A	1
11	124C11NM	14.2	C	1	4	6	4.5	124A11NM	A	1
12	124C12NM	15.45	C	1	4	6	4.5	124A12NM	A	1
13	124C13NM	16.71	C	1	4	6	4.5	124A13NM	A	1
14	124C14NM	17.98	C	1	4	7	4.5	124A14NM	A	1
15	124C15NM	19.24	C	1	4	6	4.5	124A15NM	A	1
16	124C16NM	20.5	C	1	5	7	4.5	124A16NM	A	1

Mill Duty Plastic Sprockets

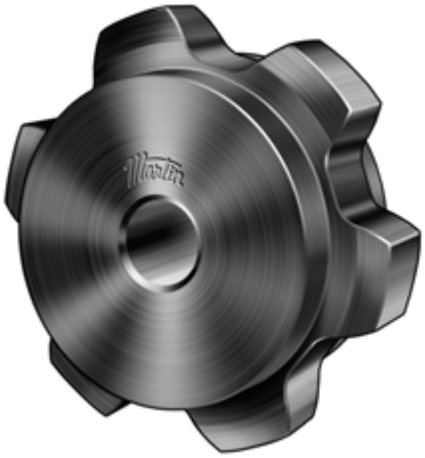

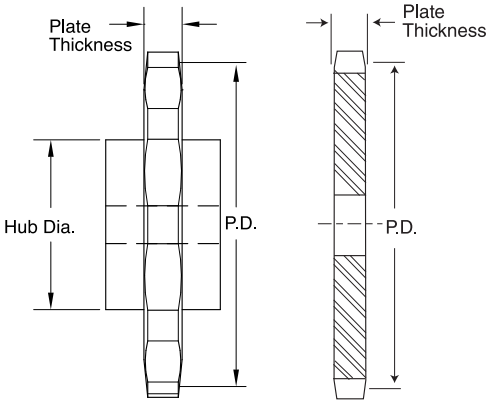

TYPE C **TYPE A**

132 **SERIES PLASTIC SPROCKETS FOR CHAINS:** C132, A132, A132WS, WS132, C132M, C132W, SX150, SXA150, 150X, 6150, W157, WH157, WR157

Type C — 6.050" Pitch

PLATE THICKNESS 2.75"
ROLLER DIAMETER 1.7187"

Type A

Number of Teeth	Catalog Number	Pitch Diameter	Type	Stock Bore	Max. Bore	Hub Diameter	LTB	Catalog Number	Type	Stock Bore
6	132C6NM	12.1	C	1	3	6.5	6	132A6NM	A	1
7	132C7NM	13.94	C	1	3	6.5	6	132A7NM	A	1
8	132C8NM	15.81	C	1	3	7	5.75	132A8NM	A	1
9	132C9NM	17.69	C	1	3	9	6.75	132A9NM	A	1
10	132C10NM	19.58	C	1	3.75	9	6.75	132A10NM	A	1
11	132C11NM	21.47	C	1	3.75	9	6.75	132A11NM	A	1
12	132C12NM	23.38	C	1	3.75	9	6.75	132A12NM	A	1

Plastic Flat-Top Conveyor Sprockets

Martin manufacturers Flat Top Conveyor Sprockets from USDA / FDA grade UHMW and thermoplastics. These sprockets are completely interchangeable with cast, steel, or other types of plastic sprockets. Martin's Non-metallic Flat Top Conveyor Sprockets are lightweight, chemical resistant, and require no lubrication. They are designed for use with both steel and plastic chain. Most popular sizes and styles are available. For special applications, Martin offers quick turnaround times on custom orders.

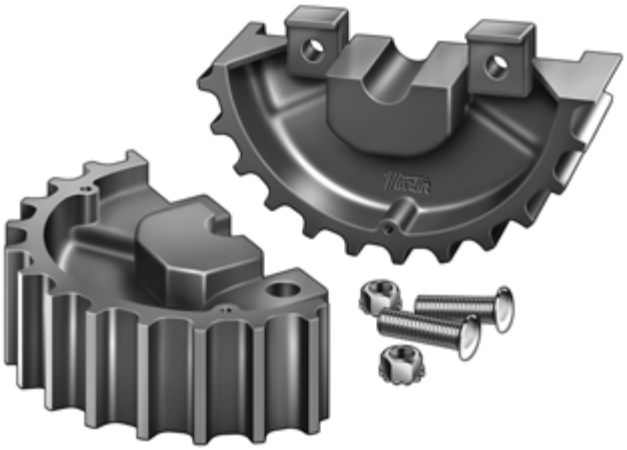

Plastic Flat-Top Conveyor Sprockets

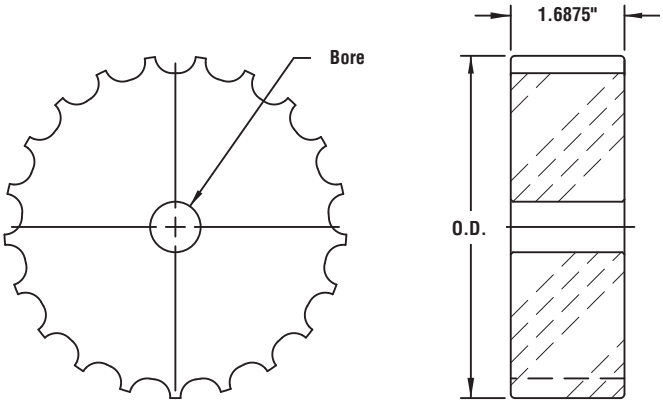

Series 815 Sprocket

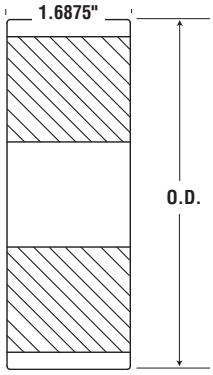

Solid Face

Series 815 Sprocket — UHMW

Catalog Number	No. of Teeth		Pitch Diameter	Outside Diameter	Bore (in)	
	Actual	Effective			Stock	Max
815A19NM	19	9.5	4.62	4.61	0.75	1.25
815A20NM	20	10	4.854	4.86	0.75	1.25
815A21NM	21	10.5	5.089	5.12	0.75	1.75
815A22NM	22	11	5.324	5.35	0.75	1.75
815A23NM	23	11.5	5.56	5.59	0.75	1.75
815A24NM	24	12	5.796	5.83	0.75	2
815A25NM	25	12.5	6.032	6.07	0.75	2
815A27NM	27	13.5	6.504	6.56	0.75	2
815A29NM	29	14.5	6.978	7.05	0.75	2.5
815A31NM	31	15.5	7.452	7.53	0.75	2.5
815A41NM	41	20.5	9.826	9.93	0.75	2.5

Series 815 — Split Thermoplastic

Catalog Number	No. of Teeth		Pitch Diameter	Outside Diameter	Bore (in)		Weight
	Actual	Effective			Stock	Max	
QRS815A21P	21	10.5	5.089 (129.26)	5.12 (130)	0.75 (19.1)	1.5 (38.1)	0.94 (0.43)
QRS815A23P	23	11.5	5.560 (141.22)	5.59 (142)	0.75 (19.1)	1.5 (38.1)	1 (0.45)
QRS815A25P	25	12.5	6.032 (153.21)	6.07 (154.2)	0.75 (19.1)	1.5 (38.1)	1.1 (0.5)
QRS815A27P	27	13.5	6.504 (165.20)	6.56 (166.6)	0.75 (19.1)	1.5 (38.1)	1.25 (0.57)

Thermoplastic temperature operating range –20°F to +300°F

• NOTE: Supplied with 5/16-18 plated setscrew @ 90° to split.

Plastic Flat-Top Conveyor Sprockets

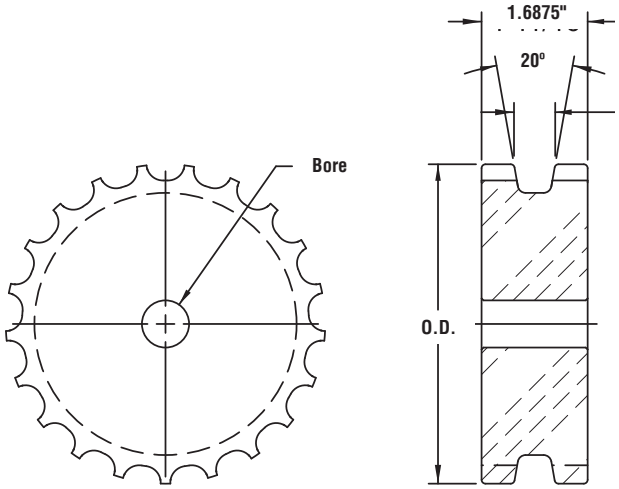

Series 820 Sprocket

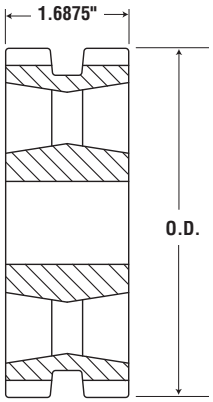

Grooved Face

Series 820 Sprocket — UHMW

Catalog Number	No. of Teeth		Pitch Diameter	Outside Diameter	Bore (in)	
	Actual	Effective			Stock	Max
820A19NM	19	9.5	4.62	4.61	0.75	1.25
820A20NM	20	10	4.854	4.86	0.75	1.25
820A21NM	21	10.5	5.089	5.12	0.75	1.75
820A22NM	22	11	5.324	5.35	0.75	1.75
820A23NM	23	11.5	5.56	5.59	0.75	1.75
820A24NM	24	12	5.796	5.83	0.75	2
820A25NM	25	12.5	6.032	6.07	0.75	2
820A27NM	27	13.5	6.504	6.56	0.75	2
820A29NM	29	14.5	6.978	7.05	0.75	2.5
820A31NM	31	15.5	7.452	7.53	0.75	2.5
820A41NM	41	20.5	9.826	9.93	0.75	2.5

Series 820 — Split Thermoplastic

Catalog Number	No. of Teeth		Pitch Diameter	Outside Diameter	Bore (in)		Weight
	Actual	Effective			Stock	Max	
QRS820A21P	21	10.5	5.089	5.12	0.75	1.5	.94
			(129.26)	(130.0)	(19.1)	(38.1)	(.43)
QRS820A23P	23	11.5	5.560	5.59	0.75	1.5	1.00
			(141.22)	(142.0)	(19.1)	(38.1)	(.45)
QRS820A25P	25	12.5	6.032	6.07	0.75	1.5	1.10
			(153.21)	(154.2)	(19.1)	(38.1)	(.50)
QRS820A27P	27	13.5	6.504	6.56	0.75	1.5	1.25
			(165.20)	(166.6)	(19.1)	(38.1)	(.57)

Thermoplastic temperature operating range –20°F to +300°F

• NOTE: Supplied with 5/16-18 plated setscrew @ 90° to split.

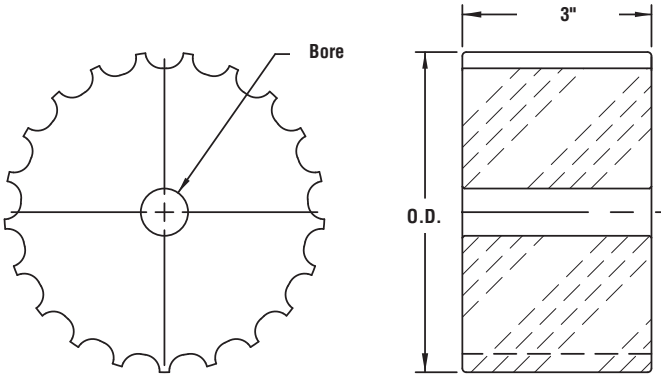

Series 821 Sprocket

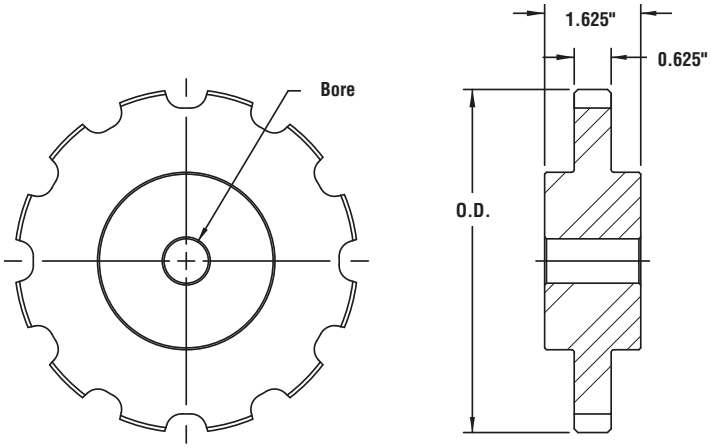

Series 821 Sprocket

Series 821 Sprocket — UHMW

Catalog Number	No. of Teeth		Pitch Diameter	Outside Diameter	Bore (in)	
	Actual	Effective			Stock	Max
821A21NM	21	10.5	5.089	5.12	0.75	1.75
821A23NM	23	11.5	5.56	5.59	0.75	1.75
821A25NM	25	12.5	6.032	6.07	0.75	2
821A27NM	27	13.5	6.504	6.56	0.75	2
821A29NM	29	14.5	6.978	7.05	0.75	2.5

Series 880 Sprocket — UHMW

Catalog Number	No. of Teeth		Pitch Diameter	Outside Diameter	Bore (in)	
	Actual	Effective			Stock	Max
880C9NM	9	9	4.386	4.33	0.75	1.75
880C10NM	10	10	4.854	4.82	0.75	1.75
880C11NM	11	11	5.325	5.31	0.75	1.75
880C12NM	12	12	5.796	5.8	0.75	1.75
880C15NM	15	15	7.215	7.26	0.75	1.75

Natural Nylon Sprockets

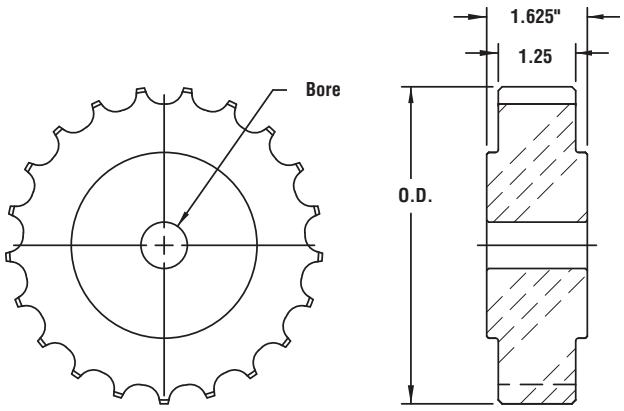

Series 881 Sprocket

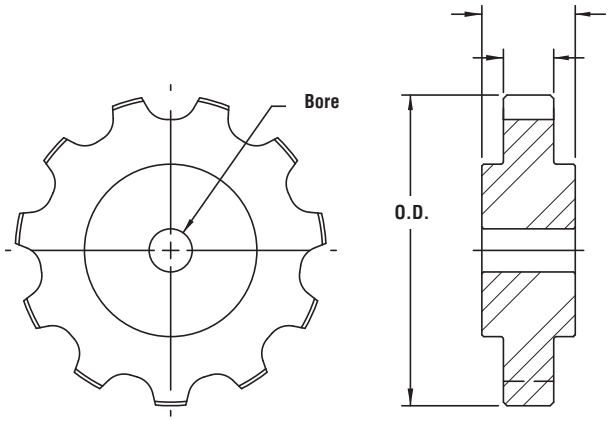

Series 882 Sprocket

Series 881 Sprocket — UHMW

Catalog Number	No. of Teeth		Pitch Diameter	Outside Diameter	Bore (in)	
	Actual	Effective			Stock	Max
881C21NM	21	10.5	5.089	5.124	0.75	1.75
881C23NM	23	11.5	5.56	5.59	0.75	1.75
881C25NM	25	12.5	6.032	6.07	0.75	1.75

Series 882 Sprocket — UHMW

Catalog Number	No. of Teeth		Pitch Diameter	Outside Diameter	Bore (in)	
	Actual	Effective			Stock	Max
882C9NM	9	9	4.386	4.43	0.75	1.75
882C10NM	10	10	4.854	4.92	0.75	1.75
882C11NM	11	11	5.325	5.41	0.75	1.75
882C12NM	12	12	5.796	5.9	0.75	1.75
882C15NM*	15	15	7.215	7.36	0.75	1.75

Plastic Gears Introduction

Martin offers "B" Style Nylon Spur Gears. Other styles and materials are available as Made-to-Order. Spur gears are available with stock bore, idler bore, or finished bore with keyway and setscrews. Standard material of construction is UHMW, Nylon and Acetal. Gear rack is supplied in nominal 48" lengths, however other lengths can be supplied upon request.

Plastic gears have been used successfully without lubrication in many of todays open gear applications. Many will work lubrication free in demanding applications where steel gears will rust or require continuous maintenance.

One key issue in selecting a plastic gear is proper sizing. Plastics have different properties than metals and are sensitive to changing operating conditions. In addition to load data, attention to drive geometry, environmental and operating conditions and plastic material properties is critical.

Martin's dedicated sales staff has the experience and knowledge to help you identify and specify the proper gear for your application.

Benefits of Plastic:

- Cost Effective
- Noise Reduction
- Ability to Absorb Shock and Vibration
- Relatively Low Coefficient of Friction
- Corrosion Resistance - elimination of plating, or protective coatings
- Tolerances often less critical than metal due to greater resilience

4 DP
2" Face

Nylon Stock Spur Gears
14½°Pressure Angle

Martin

Our Spur Gears are machined from solid plates of material, resulting in a spur gear that you can count on to get the job done.

- Standard Material: Natural Oil-Filled Nylon
- Other numbers of teeth and hub styles available
- Available as finished bore with Keyway and Set Screws

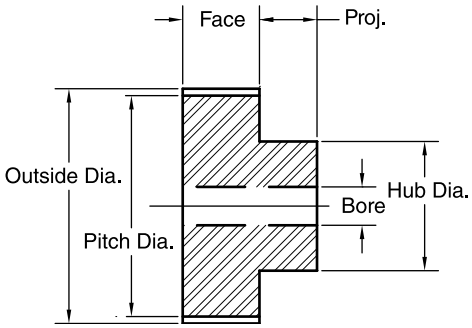

Natural Oil-Filled Nylon Spur Gears

Number of Teeth	Catalog Number	4DP		Type	Bore (in)		Hub (in)	
		Pitch	Outside		Stock	Max.*	Diameter	Project
11	NM411	3	3.5	B	0.75	1.25	2.25	0.875
12	NM412	3	3.5	B	0.75	1.25	2.25	0.875
13	NM413	3.25	3.75	B	0.75	1.25	2.25	0.875
14	NM414	3.5	4	B	0.75	1.625	2.75	0.875
15	NM415	3.75	4.25	B	0.75	1.75	3	0.875
16	NM416	4	4.5	B	0.75	1.75	3.25	0.875
17	NM417	4.25	4.75	B	0.75	2	3.5	0.875
18	NM418	4.5	5	B	0.75	2	3.5	0.875
19	NM419	4.75	5.25	B	0.75	2	3.5	0.875
20	NM420	5	5.5	B	0.75	2.125	3.75	0.875
21	NM421	5.25	5.75	B	0.75	2.375	4	0.875
22	NM422	5.5	6	B	0.75	2.625	4.5	0.875
24	NM424	6	6.5	B	0.75	2.875	4.5	1.5
26	NM426	6.5	7	B	0.75	2.875	4.5	1.5
28	NM428	7	7.5	B	0.75	2.875	4.5	1.5
30	NM430	7.5	8	B	0.75	2.875	4.5	1.5
32	NM432	8	8.5	B	0.75	2.875	4.5	1.5
36	NM436	9	9.5	B	0.75	2.875	4.5	1.5
40	NM440	10	10.5	B	0.75	3.375	5.125	1.5
42	NM442	10.5	11	B	0.75	3.375	5.125	1.5
44	NM444	11	11.5	B	0.75	3.375	5.125	1.5
48	NM448	12	12.5	B	0.75	3.375	5.125	1.5
54	NM454	13.5	14	B	0.75	3.375	5	1.5
56	NM456	14	14.5	B	0.75	3.375	5	1.5
60	NM460	15	15.5	B	0.75	3.375	5	1.5
64	NM464	16	16.5	B	0.75	3.375	5	1.5
72	NM472	18	18.5	B	0.75	3.375	5.5	1.5
80	NM480	20	20.5	B	0.75	3.375	5.5	1.5
84	NM484	21	21.5	B	0.75	3.375	5.5	1.5
88	NM488	22	22.5	B	0.75	3.375	6.125	1.5
96	NM496	24	24.5	B	0.75	3.375	6.125	1.5

* Recommended Maximum Bore With Keyway and Setscrew.

14½° P.A. Gears Will Not Operate With 20° P.A.

Nylon Stock Spur Gears

14½°Pressure Angle

5 DP

1¾" Face

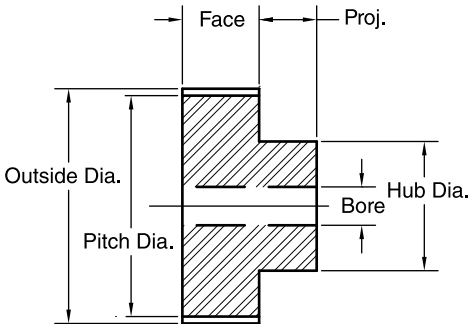

Natural Oil-Filled Nylon Spur Gears

Number of Teeth	Catalog Number	4DP		Type	Bore (in)		Hub (in)	
		Pitch	Outside		Stock	Max.*	Diameter	Project
11	NM511	2.4	2.8	B	0.75	1	1.781	0.875
12	NM512	2.4	2.8	B	0.75	1	1.781	0.875
13	NM513	2.6	3	B	0.75	1	2	0.875
14	NM514	2.8	3.2	B	0.75	1	2.188	0.875
15	NM515	3	3.4	B	0.75	1	2.375	0.875
16	NM516	3.2	3.6	B	0.75	1	2.594	0.875
17	NM517	3.4	3.8	B	0.75	1.5	2.875	0.875
18	NM518	3.6	4	B	0.75	1.75	3	0.875
19	NM519	3.8	4.2	B	0.75	2	3.25	0.875
20	NM520	4	4.4	B	0.75	2	3.375	0.875
21	NM521	4.2	4.6	B	0.75	2	3.375	0.875
22	NM522	4.4	4.8	B	0.75	2	3.375	0.875
23	NM523	4.6	5	B	0.75	2	3.375	0.875
24	NM524	4.8	5.2	B	0.75	2	3.75	0.875
25	NM525	5	5.4	B	0.75	2	3.75	0.875
26	NM526	5.2	5.6	B	0.75	2	3.75	0.875
28	NM528	5.6	6	B	0.75	2	3.75	0.875
30	NM530	6	6.4	B	0.75	2	3.75	0.875
35	NM535	7	7.4	B	0.75	2.5	3.75	1.25
40	NM540	8	8.4	B	0.75	2.5	3.75	1.25
45	NM545	9	9.4	B	0.75	2.5	3.75	1.25
50	NM550	10	10.4	B	0.75	2.5	3.75	1.25
55	NM555	11	11.4	B	0.75	3	3.75	1.25
60	NM460	12	12.4	B	0.75	3	3.75	1.25
70	NM570	14	14.4	B	0.75	3	5	1.5
80	NM580	16	16.4	B	0.75	3	5	1.5
90	NM590	18	18.4	B	0.75	3.5	5	1.5

* Recommended Maximum Bore With Keyway and Setscrew.

14½° P.A. Gears Will Not Operate With 20° P.A.

6 DP
1½" Face

Nylon Stock Spur Gears
14½°Pressure Angle

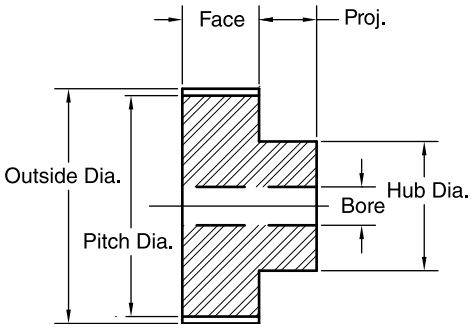

Natural Oil-Filled Nylon Spur Gears

Number of Teeth	Catalog Number	4DP		Type	Bore (in)		Hub (in)	
		Pitch	Outside		Stock	Max.*	Diameter	Project
11	NM611	2	2.333	B	0.5	0.75	1.5	0.875
12	NM612	2	2.333	B	0.5	0.75	1.5	0.875
14	NM614	2.333	2.666	B	0.5	0.875	1.813	0.875
15	NM615	2.5	2.833	B	0.75	1.125	2	0.875
16	NM616	2.666	3	B	0.75	1.25	2.156	0.875
18	NM618	3	3.333	B	0.75	1.375	2.5	0.875
20	NM620	3.333	3.666	B	0.75	1.625	2.844	0.875
21	NM621	3.5	3.833	B	0.75	1.75	3	0.875
22	NM622	3.666	4	B	0.75	1.75	3	0.875
24	NM624	4	4.333	B	0.75	1.75	3	1
27	NM627	4.5	4.833	B	0.75	1.75	3	1
28	NM628	4.666	5	B	0.75	1.75	3	1
30	NM630	5	5.333	B	0.75	1.75	3.125	1
32	NM632	5.333	5.666	B	0.75	1.75	3.125	1
33	NM633	5.5	5.833	B	0.75	1.75	3.25	1
36	NM636	6	6.333	B	0.75	2.375	4	1
39	NM639	6.5	6.833	B	0.75	2.375	4	1
40	NM640	6.666	7	B	0.75	2.375	4	1
42	NM642	7	7.333	B	0.75	2.375	4	1
45	NM645	7.5	7.833	B	0.75	2.375	4	1
48	NM648	8	8.333	B	0.75	2.5	4.125	1
52	NM652	8.666	9	B	0.75	2.625	4.25	1
54	NM654	9	9.333	B	0.75	2.75	4.375	1
58	NM658	9.666	10	B	0.75	2.75	4.375	1
60	NM660	10	10.333	B	0.75	2.75	4.375	1.25
64	NM664	10.666	11	B	0.75	2.75	4.375	1.25
66	NM666	11	11.333	B	0.75	2.75	4.375	1.25
72	NM672	12	12.333	B	0.75	2.75	4.375	1.25
84	NM684	14	14.333	B	0.75	2.875	4.5	1.25
96	NM696	16	16.333	B	0.75	3.375	5.125	1.25

* Recommended Maximum Bore With Keyway and Setscrew.

14½° P.A. Gears Will Not Operate With 20° P.A.

Nylon Stock Spur Gears

14½°Pressure Angle

8 DP

1¼" Face

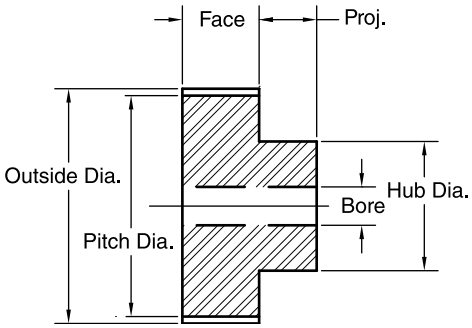

Natural Oil-Filled Nylon Spur Gears

Number of Teeth	Catalog Number	4DP		Type	Bore (in)		Hub (in)	
		Pitch	Outside		Stock	Max.*	Diameter	Project
11	NM811	1.5	1.75	B	0.5	0.75	1.125	0.75
12	NM812	1.5	1.75	B	0.5	0.75	1.125	0.75
13	NM813	1.625	1.875	B	0.5	0.75	1.25	0.75
14	NM814	1.75	2	B	0.5	0.625	1.375	0.75
15	NM815	1.875	2.125	B	0.5	0.75	1.5	0.75
16	NM816	2	2.25	B	0.5	0.875	1.625	0.75
17	NM817	2.125	2.375	B	0.5	0.875	1.75	0.75
18	NM818	2.25	2.5	B	0.75	1	1.875	0.75
19	NM819	2.375	2.625	B	0.75	1.125	2	0.75
20	NM820	2.5	2.75	B	0.75	1.125	2.125	0.75
21	NM821	2.625	2.875	B	0.75	1.25	2.25	0.75
22	NM822	2.75	3	B	0.75	1.25	2.375	0.75
24	NM824	3	3.25	B	0.75	1.5	2.625	1
26	NM826	3.25	3.5	B	0.75	1.5	2.625	1
28	NM828	3.5	3.75	B	0.75	1.625	2.75	1
30	NM830	3.75	4	B	0.75	1.75	2.875	1
32	NM832	4	4.25	B	0.75	1.75	3	1
36	NM836	4.5	4.75	B	0.75	1.75	3	1
40	NM840	5	5.25	B	0.75	1.75	3	1
42	NM842	5.25	5.5	B	0.75	1.75	3	1
44	NM844	5.5	5.75	B	0.75	1.75	3	1
48	NM848	6	6.25	B	0.75	1.75	3	1

* Recommended Maximum Bore With Keyway and Setscrew.

14½° P.A. Gears Will Not Operate With 20° P.A.

10 DP
1" Face

Nylon Stock Spur Gears
14½°Pressure Angle

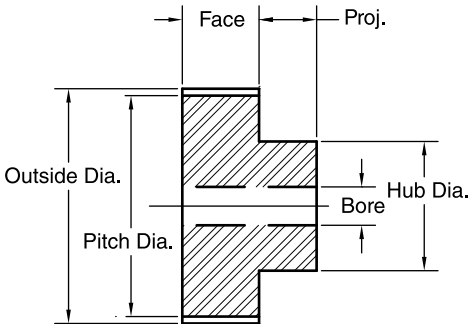

Natural Oil-Filled Nylon Spur Gears

Number of Teeth	Catalog Number	4DP		Type	Bore (in)		Hub (in)	
		Pitch	Outside		Stock	Max.*	Diameter	Project
11	NM1011	1.2	1.4	B	0.25	0.5	0.938	0.625
12	NM1012	1.2	1.4	B	0.25	0.5	0.938	0.625
13	NM1013	1.3	1.5	B	0.25	0.5	1	0.625
14	NM1014	1.4	1.6	B	0.5	0.5	1.125	0.625
15	NM1015	1.5	1.7	B	0.5	0.75	1.219	0.625
16	NM1016	1.6	1.8	B	0.5	0.75	1.313	0.625
17	NM1017	1.7	1.9	B	0.5	0.75	1.375	0.625
18	NM1018	1.8	2	B	0.5	0.75	1.531	0.625
19	NM1019	1.9	2.1	B	0.5	0.75	1.563	0.625
20	NM1020	2	2.2	B	0.5	0.875	1.719	0.625
21	NM1021	2.1	2.3	B	0.5	0.875	1.75	0.625
22	NM1022	2.2	2.4	B	0.75	1	1.875	0.625
24	NM1024	2.4	2.6	B	0.75	1.125	2.125	0.625
25	NM1025	2.5	2.7	B	0.75	1.25	2.219	0.625
26	NM1026	2.6	2.8	B	0.75	1.25	2.125	0.625
28	NM1028	2.8	3	B	0.75	1.25	2.125	0.875
30	NM1030	3	3.2	B	0.75	1.25	2.125	0.875
32	NM1032	3.2	3.4	B	0.75	1.25	2.125	0.875
35	NM1035	3.5	3.7	B	0.75	1.25	2.25	0.875
36	NM1036	3.6	3.8	B	0.75	1.25	2.25	0.875
38	NM1038	3.8	4	B	0.75	1.25	2.25	0.875
40	NM1040	4	4.2	B	0.75	1.25	2.25	0.875
42	NM1042	4.2	4.4	B	0.75	1.25	2.25	0.875
45	NM1045	4.5	4.7	B	0.75	1.375	2.5	0.875
48	NM1048	4.8	5	B	0.75	1.375	2.5	0.875
50	NM1050	5	5.2	B	0.75	1.375	2.5	0.875
54	NM1054	5.4	5.6	B	0.75	1.375	2.5	0.875
55	NM1055	5.5	5.7	B	0.75	1.375	2.5	0.875
60	NM1060	6	6.2	B	0.75	1.375	2.5	0.875

* Recommended Maximum Bore With Keyway and Setscrew.

14½° P.A. Gears Will Not Operate With 20° P.A.

Nylon Stock Spur Gears

14½°Pressure Angle

12 DP

¾" Face

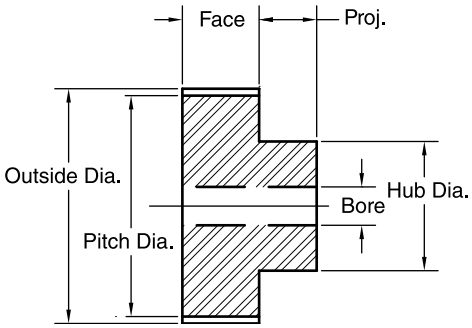

Natural Oil-Filled Nylon Spur Gears

Number of Teeth	Catalog Number	4DP		Type	Bore (in)		Hub (in)	
		Pitch	Outside		Stock	Max.*	Diameter	Project
11	NM1211	1	1.167	B	0.25	0.5	0.75	0.5
12	NM1212	1	1.167	B	0.25	0.5	0.75	0.5
13	NM1213	1.083	1.25	B	0.25	0.5	0.813	0.5
14	NM1214	1.167	1.333	B	0.25	0.5	0.906	0.5
15	NM1215	1.25	1.417	B	0.25	0.5	1	0.5
16	NM1216	1.333	1.5	B	0.5	0.5	1.063	0.5
17	NM1217	1.413	1.58	B	0.5	0.5	1.125	0.5
18	NM1218	1.5	1.667	B	0.5	0.5	1.25	0.5
19	NM1219	1.583	1.75	B	0.5	0.75	1.313	0.5
20	NM1220	1.667	1.833	B	0.5	0.875	1.813	0.5
21	NM1221	1.75	1.917	B	0.5	0.75	1.5	0.5
22	NM1222	1.833	2	B	0.5	0.875	1.563	0.5
23	NM1223	1.917	2.083	B	0.5	0.875	1.625	0.5
24	NM1224	2	2.166	B	0.5	0.875	1.75	0.5
25	NM1225	2.083	2.25	B	0.5	0.875	1.844	0.5
26	NM1226	2.167	2.333	B	0.5	1	1.938	0.625
28	NM1228	2.333	2.5	B	0.5	1.25	2.063	0.625
30	NM1230	2.5	2.667	B	0.5	1.25	2.25	0.625
32	NM1232	2.667	2.833	B	0.5	1.25	2.25	0.625
34	NM1234	2.833	3	B	0.5	1.25	2.25	0.625
36	NM1236	3	3.167	B	0.5	1.375	2.5	0.625
39	NM1239	3.167	3.333	B	0.5	1.375	2.5	0.625
40	NM1240	3.333	3.5	B	0.5	1.375	2.5	0.625
42	NM1242	3.5	3.666	B	0.5	1.375	2.5	0.625
44	NM1244	3.667	3.833	B	0.5	1.375	2.5	0.625
48	NM1248	4	4.166	B	0.5	1.375	2.5	0.75
54	NM1254	4.5	4.666	B	0.75	1.625	2.75	0.75
56	NM1256	4.667	4.833	B	0.75	1.625	2.75	0.75
60	NM1260	5	5.166	B	0.75	1.625	2.75	0.75
64	NM1264	5.333	5.5	B	0.75	1.625	2.75	0.75
66	NM1266	5.5	5.666	B	0.75	1.625	2.75	0.75
72	NM1272	6	6.166	B	0.75	1.625	2.75	0.75

* Recommended Maximum Bore With Keyway and Setscrew.

14½° P.A. Gears Will Not Operate With 20° P.A.

16 DP
½" Face

Nylon Stock Spur Gears
14½°Pressure Angle

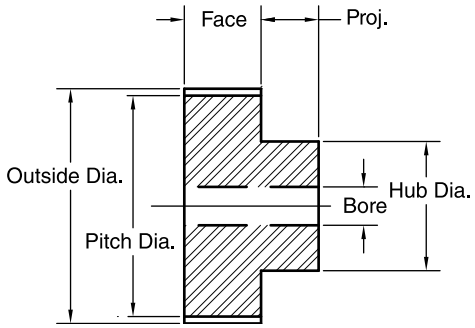

Natural Oil-Filled Nylon Spur Gears

Number of Teeth	Catalog Number	4DP		Type	Bore (in)		Hub (in)	
		Pitch	Outside		Stock	Max.*	Diameter	Project
11	NM1611	0.75	0.875	B	0.25	0.375	0.563	0.438
12	NM1612	0.75	0.875	B	0.25	0.375	0.563	0.438
13	NM1613	0.812	0.937	B	0.25	0.375	0.625	0.438
14	NM1614	0.875	1	B	0.25	0.375	0.688	0.438
15	NM1615	0.937	1.062	B	0.25	0.5	0.75	0.438
16	NM1616	1	1.125	B	0.25	0.5	0.813	0.438
17	NM1617	1.062	1.187	B	0.25	0.5	0.875	0.438
18	NM1618	1.125	1.25	B	0.25	0.5	0.938	0.438
19	NM1619	1.187	1.312	B	0.25	0.5	1	0.438
20	NM1620	1.25	1.375	B	0.5	0.5	1.063	0.438
21	NM1621	1.312	1.438	B	0.5	0.5	1.125	0.438
22	NM1622	1.375	1.5	B	0.5	0.5	1.188	0.438
23	NM1623	1.437	1.562	B	0.5	0.5	1.25	0.438
24	NM1624	1.5	1.625	B	0.5	0.625	1.313	0.438
26	NM1626	1.625	1.75	B	0.5	0.75	1.438	0.438
28	NM1628	1.75	1.875	B	0.5	0.75	1.5	0.5
30	NM1630	1.875	2	B	0.5	0.875	1.625	0.5
32	NM1632	2	2.125	B	0.5	1	1.75	0.5
34	NM1634	2.125	2.25	B	0.5	1.125	1.875	0.5
36	NM1636	2.25	2.375	B	0.5	1.125	2	0.5
38	NM1638	2.375	2.5	B	0.5	1.125	2	0.5
40	NM1640	2.5	2.626	B	0.75	1.125	2	0.5
44	NM1644	2.75	2.875	B	0.5	1.125	2	0.5
48	NM1648	3	3.125	B	0.5	1.125	2	0.5
52	NM1652	3.25	3.375	B	0.5	1.125	2	0.5
54	NM1654	3.375	3.5	B	0.5	1.125	2	0.5
56	NM1656	3.5	3.625	B	0.5	1.125	2	0.5
60	NM1660	3.75	3.875	B	0.5	1.125	2	0.5
64	NM1664	4	4.125	B	0.5	1.125	2	0.625
68	NM1668	4.25	4.375	B	0.5	1.25	2.25	0.625
72	NM1672	4.5	4.625	B	0.5	1.25	2.25	0.625
80	NM1680	5	5.125	B	0.5	1.25	2.25	0.625
84	NM1684	5.25	5.375	B	0.5	1.25	2.25	0.625
88	NM1688.	5.5	5.625	B	0.5	1.25	2.25	0.625
96	NM1696	6	6.125	B	0.5	1.25	2.25	0.625

* Recommended Maximum Bore With Keyway and Setscrew.

14½° P.A. Gears Will Not Operate With 20° P.A.

Nylon Stock Spur Gears

14½°Pressure Angle

20 DP

⅜" Face

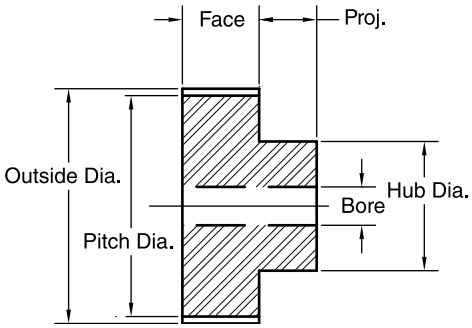

Natural Oil-Filled Nylon Spur Gears

Number of Teeth	Catalog Number	4DP		Type	Bore (in)		Hub (in)	
		Pitch	Outside		Stock	Max.*	Diameter	Project
11	NM2011	0.55	0.65	B	0.25	0.313	0.406	0.375
12	NM2012	0.6	0.7	B	0.25	0.313	0.469	0.375
14	NM2014	0.7	0.8	B	0.25	0.313	0.547	0.375
15	NM2015	0.75	0.85	B	0.25	0.375	0.609	0.375
18	NM2018	0.9	1	B	0.25	0.375	0.75	0.375
20	NM2020	1	1.1	B	0.25	0.375	0.859	0.375
24	NM2024	1.2	1.3	B	0.375	0.563	1.063	0.375
30	NM2030	1.5	1.6	B	0.375	0.813	1.359	0.375
32	NM2032	1.6	1.7	B	0.375	0.875	1.438	0.5

* Recommended Maximum Bore With Keyway and Setscrew.

14½° P.A. Gears Will Not Operate With 20° P.A.

Machined Nylon Gear Rack

- Standard Material: Natural Oil-Filled Nylon
- Other dimensions available
- Supplied as nominal 48" lengths.
- Matched ends available upon request

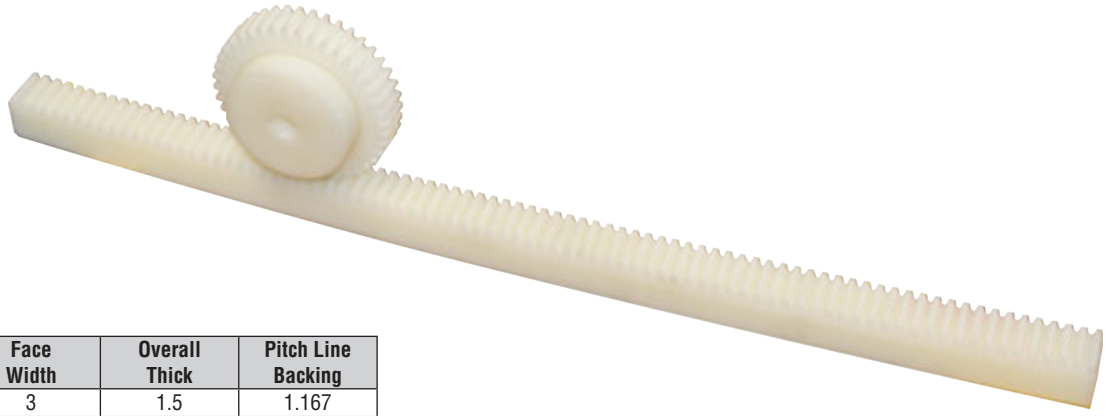

Gear Rack
14½° PA

Pitch	Catalog Number	Face Width	Overall Thick	Pitch Line Backing
3	R3X4NM	3	1.5	1.167
4	R4X4NM	2	1.5	1.25
4	RA4X4NM	2	2	1.75
5	R5X4NM	1.75	1.25	1.05
5	RA5X4NM	1.75	1.5	1.3
6	R6X4NM	1.5	1	0.833
6	RA6X4NM	1.5	1.5	1.333
8	R8X4NM	1.25	0.75	0.625
8	RA8X4NM	1.25	1.25	1.125
10	R10X4NM	1	0.625	0.525
10	RA10X4NM	1	1	0.9
12	R12X4NM	0.75	0.5	0.417
12	RA12X4NM	0.75	0.75	0.667
16	RA16X4NM	0.5	0.5	0.438
20	RA20X4NM	0.375	0.375	0.325

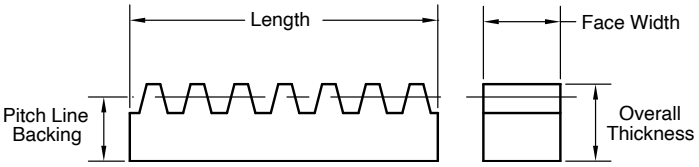

Gear Rack
20° PA

Pitch	Catalog Number	Face Width	Overall Thick	Pitch Line Backing
3	R3X4NM	3	1.5	1.167
4	R4X4NM	2	1.5	1.25
4	RA4X4NM	2	2	1.75
5	R5X4NM	1.75	1.25	1.05
5	RA5X4NM	1.75	1.5	1.3
6	R6X4NM	1.5	1	0.833
6	RA6X4NM	1.5	1.5	1.333
8	R8X4NM	1.25	0.75	0.625
8	RA8X4NM	1.25	1.25	1.125
10	R10X4NM	1	0.625	0.525
10	RA10X4NM	1	1	0.9
12	R12X4NM	0.75	0.5	0.417
12	RA12X4NM	0.75	0.75	0.667
16	RA16X4NM	0.5	0.5	0.438
20	RA20X4NM	0.375	0.375	0.325

Wheels & Rollers

UHMW – White

Martin Wheels may be used as a direct replacement for conventional steel or aluminum wheels in many applications. These industrial plastic wheels are quiet operating, non-marking and corrosion resistant while maintaining a high load capacity.

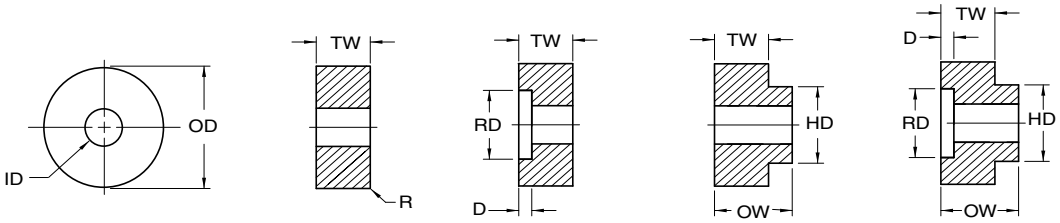

SHARP CORNER EDGE | TYPE E | TYPE F | TYPE G | TYPE H

Wheels & Roller – Sharp Corner Edges

Part Number	Type	Outside Diameter	Inside Diameter	TW Tread Width	OW Overall Width	HD Hub Diameter	RD Recess Diameter	D Recess Depth
WRS1001NM	E	0.438	0.125	0.25	–	–	–	–
WRS1002NM	G	0.438	0.125	0.25	0.313	0.313	–	–
WRS1003NM	F	0.438	0.139	0.313	–	–	0.219	0.063
WRS1004NM	F	0.438	0.139	0.313	–	–	0.313	0.125
WRS1005NM	E	0.5	0.201	0.313	–	–		
WRS1006NM	F	0.563	0.264	0.313	–	–	0.469	0.063
WRS1007NM	E	0.625	0.201	0.5	–	–		
WRS1008NM	H	0.688	0.389	0.188	0.25	0.5	0.5	0.063
WRS1009NM	E	0.75	0.264	0.781	–	–	–	–
WRS1010NM	E	0.75	0.264	1	–	–	–	–
WRS1011NM	E	0.875	0.187	0.5	–	–	–	–
WRS1012NM	F	0.875	0.327	0.469			0.625	0.188
WRS1013NM	H	0.875	0.201	0.313	0.375	0.688	0.625	0.125
WRS1014NM	F	1	0.38	0.375	–	–	0.813	0.063
WRS1015NM	E	1.125	0.26	0.375	–	–	–	–
WRS1016NM	F	1.5	0.317	0.406	–		1.25	0.156
WRS1017NM	G	2.5	0.326	1.375	1.5	0.75	–	–
WRS1018NM	G	3	0.505	1.375	1.25	0.875	–	–

NOTE: Dimensions in inches.

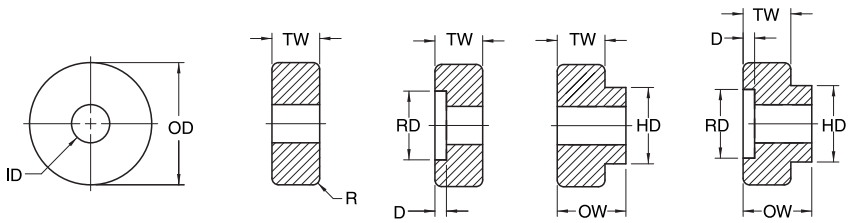

Radius Edge | TYPE E | TYPE F | TYPE G | TYPE H

Wheels & Roller – Radius Edges

Part Number	Type	Outside Diameter	Inside Diameter	TW Tread Width	OW Overall Width	HD Hub Diameter	RD Recess Diameter	D Recess Depth	R Radius
WRR2001NM	F	0.375	0.095	0.375	–	–	0.188	0.125	0.125
WRR2002NM	F	0.5	0.19	0.375	–	–	0.375	0.063	0.063
WRR2003NM	F	0.625	0.187	0.313	–	–	0.313	0.125	0.063
WRR2004NM	H	0.75	0.201	0.25	0.281	0.313	0.656	0.063	0.063
WRR2005NM	E	0.75	0.264	0.5	–	–	–	–	0.125
WRR2006NM	G	0.875	0.139	0.375	0.438	0.5	–	–	0.125
WRR2007NM	F	1	0.201	0.5	–	–	0.563	0.094	0.063
WRR2008NM	E	1.125	0.264	0.375	–	–	–	–	0.125
WRR2009NM	H	1.125	0.326	0.375	0.438	0.5	0.625	0.063	0.125
WRR2010NM	E	2	0.641	0.125	–	–	–	–	0.063
WRS1018NM	G	3	0.505	1.375	1.25	0.875	–		–

NOTE: Dimensions in inches.

Wheels & Rollers

UHMW – White

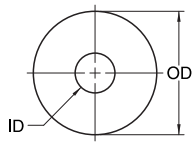

FULL RADIUS EDGES

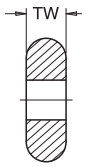

TYPE M

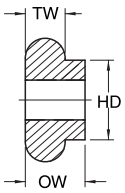

TYPE N

Wheels & Roller – Full Radius Edges

Part Number	Type	Outside Diameter	Inside Diameter	TW Tread Width	OW Overall Width	HD Hub Diameter
WRFR4001NM	M	0.75	0.264	0.25	–	–
WRFR4002NM	N	0.75	0.264	0.25	0.313	0.375
WRFR4003NM	N	0.75	0.312	0.25	0.5	0.5
WRFR4004NM	N	0.938	0.375	0.188	0.25	0.5
WRFR4005NM	M	1	0.201	0.25	–	–
WRFR4006NM	M	1.5	0.389	0.75	–	–
WRFR4007NM	N	1.5	0.389	0.75	1	0.75
WRFR4008NM	M	2	0.389	1	–	–

NOTE: Dimensions in inches.

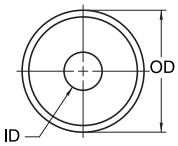

CHAMFERED EDGES

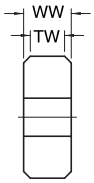

TYPE I

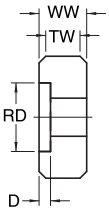

TYPE J

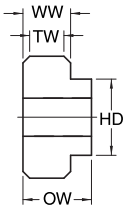

TYPE K

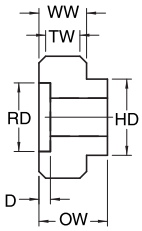

TYPE L

- Trolley Wheels
- Guide Wheels
- Spools
- Crowned Wheels
- Pallet Jack Wheels

Wheels & Roller – Chamfered Edges

Part Number	Type	Outside Diameter	Inside Diameter	TW Tread Width	OW Overall Width	HD Hub Diameter	RD Recess Diameter	D Recess Depth	Chamfer
WRC3001NM	L	0.75	0.326	0.219	0.5	0.5	0.563	0.031	45° × .031
WRC3002NM	I	0.875	0.326	0.25	–	–	–	–	45° × .031
WRC3003NM	L	0.875	0.375	0.188	0.375	0.5	0.5	0.031	45° × .031
WRC3004NM	K	0.875	0.389	0.188	0.375	0.5	–	–	45° × .031
WRC3005NM	J	0.938	0.375	0.313	–	–	–	–	45° × .031
WRC3006NM	K	0.938	0.389	0.188	0.375	0.5	0.5	0.063	45° × .031
WRC3007NM	I	1	0.75	0.5	–	–	–	–	45° × .063
WRC3008NM	J	1	0.389	0.188	–	–	0.813	0.063	45° × .031
WRC3009NM	I	1.063	0.326	0.25	–	–	–	–	45° × .063
WRC3010NM	L	1.063	0.389	0.094	0.563	0.625	0.625	0.063	45° × .094
WRC3011NM	I	1.5	0.505	1	–	–	–	–	45° × .125

NOTE: Dimensions in inches.
Other sizes are available upon request.
Other materials, such as Acetal, Teflon® and Nylon, are also available.

78 Series Shear Pin Sprocket

- Nylon Body & Nylon Sprocket
- Includes Trip Indicator

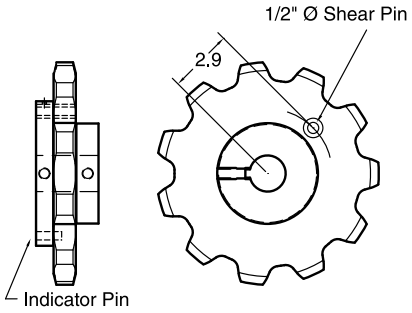

No. Teeth	Part Number	Pitch Dia.	Type	Bore Max.	A	B	C	D
10	78SP10NM	8.44	C	2	4.875	3.25	3.75	8
11	78SP11NM	9.26	C	2.5	4.875	3.25	3.75	8
13	78SP13NM	10.9	C	3	5.875	3.75	4.438	9

NOTE: Dimensions in inches.

78 Series Jaw Clutch Sprocket

- Nylon Body & Nylon Sprocket
- Includes Trip Indicator

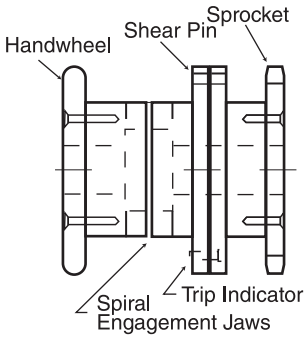

No. Teeth	Part Number	Pitch Dia.	Type	Bore Max.	A	B	C	D
11	78JC11	9.26	C	2.5	3.5	2.75	3	14.25

NOTE: Dimensions in inches.

720 Series Split Sprocket

- UHMW sprocket plates & hubs
- 304 Stainless Steel hardware as standard
- 316 Stainless Steel hardware optional
- Standard Rim and Chain-saver rim available
- Other Numbers of Teeth Available

6.0" Pitch, 1" Nominal Plate Width
4" Length Thru Bore, C- Hub

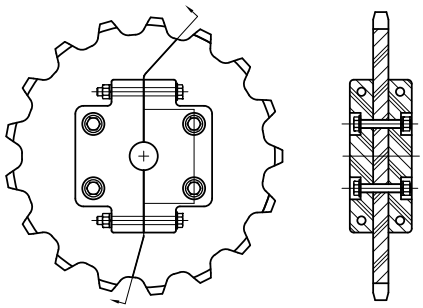

No. Teeth	Part Number	Pitch Dia.	Outside Dia.	Bore Stock	Max Drive	Max Idler	Hub Dia.	Nom LTB
13	720C13NMS	12.91	13.5	1	3.25	3.625	7	4
17	720C17NMS	16.59	17.09	1.75	3.938	5	8.875	4
19	720C19NMS	18.45	18.95	1.75	3.938	5	8.875	4
21	720C21NMS	20.33	20.83	1.75	3.938	5	8.875	4
23	720C23NMS	22.21	22.71	1.75	3.938	5	8.875	4
25	720C25NMS	24.1	24.6	1.75	4.5	6	10.5	4

NOTE: Dimensions in inches.

720 Series Split Sprocket

6.0" Pitch, 1" Nominal Plate Width
4" Length Thru Bore, C- Hub

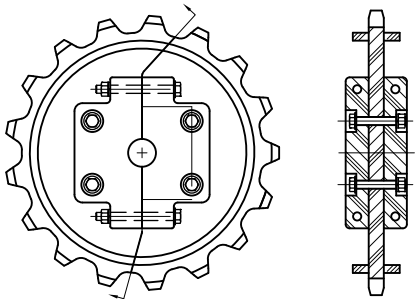

No. Teeth	Part Number	Pitch Dia.	Outside Dia.	Chainsaver Hub Dia.	Bore Stock	Max Drive	Max Idler	Hub Dia.	Nom LTB
13	720CS13NMS	12.89	13.39	10.03	1	3.25	3.625	7	4
17	720CS17NMS	16.59	17.09	14.07	1.75	3.938	5	8.875	4
19	720CS19NMS	18.45	18.95	16.06	1.75	3.938	5	8.875	4
21	720CS21NMS	20.33	20.83	18.04	1.75	3.938	5	8.875	4
23	720CS23NMS	22.21	22.71	20	1.75	3.938	5	8.875	4
25	720CS25NMS	24.1	24.6	22.03	1.75	4.5	6	10.5	4

NOTE: Dimensions in inches.

Wastewater Treatment Components

Static Shaft Bushings

These static shaft bushings protect expensive shafts from damage caused by idler sprockets. Manufactured from green oil-filled nylon with stainless steel hardware. They are as durable as stainless steel counterparts at a fraction of the cost. They are chemical, corrosion, moisture and abrasive resistant. Custom sizes and materials available.

Part Number	Max. Shaft Size	A	B	D
WTB4700	2.938	4.13	6.125	4.5
WTB6400	4	4.13	6.125	6
WTB7200	4.5	4.13	6.125	6.25
WTB8400	5.25	4.13	6.125	7

NOTE: Dimensions in inches.

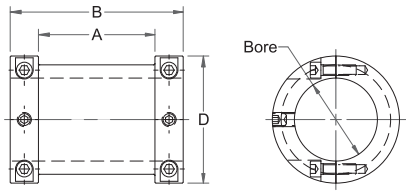

Static Shaft Bushing-Split

Shaft Collars – Regular Duty

Part Number	W	Outside Diameter	Bore	
			Stock	Max.
WTSC600	1	6	1.75	4
WTSC800	1	8	3.25	5

Shaft Collars – Heavy Duty

Part Number	W	Outside Diameter	Bore	
			Stock	Max.
WTSC2600	2.5	6	1.75	4
WTSC2800	2.5	8	3.25	5

NOTE: Dimensions in inches.

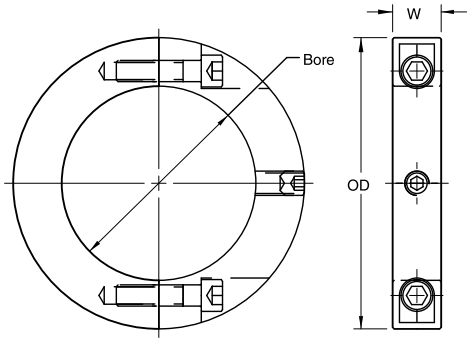

Shaft Collar

Wear Strips

These wear strips are easy to install and provide superior protection for rails and other moving machinery. Strips include slots for weld washer installations. We can easily accommodate any special spacing or size requirement for the strips and slots.

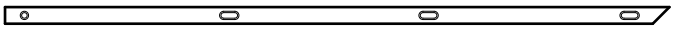

Starter Strip

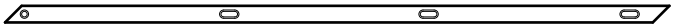

Filler Strip

Filler Wear Strips / Starter Wear Strips

Part Number	Thickness	Width	Length	Center Line	Part Number	Thickness	Width	Length	Center Line
WTF1000	0.38	2.63	120	1.31	WTS1100	0.38	2.63	120	1.31
WTF1002	0.38	3	120	1.5	WTS1102	0.38	3	120	1.5
WTF1003	0.5	2.5	120	1.25	WTS1103	0.5	2.5	120	1.25
WTF1004	0.5	3	120	1.5	WTS1104	0.5	3	120	1.5
WTF1005	0.5	3.5	120	1.75	WTS1105	0.5	3.5	120	1.75
WTF1006	0.5	4	120	2	WTS1106	0.5	4	120	2
WTF1007	0.5	5	120	2.5	WTS1107	0.5	5	120	2.5
WTF1008	0.63	2.5	120	1.25	WTS1108	0.63	2.5	120	1.25
WTF1009	0.63	3	120	1.5	WTS1109	0.63	3	120	1.5
WTF1010	0.63	4	120	2	WTS1110	0.63	4	120	2
WTF1011	0.63	5	120	2.5	WTS1111	0.63	5	120	2.5

NOTE: Dimensions in inches.

Weld Washers

Used to fasten wear strips to rails and tank floors.

Part Number	Material	Diameter
WTWW1375SS	Stainless Steel	1.375

NOTE: Dimensions in inches.

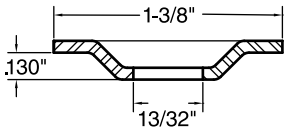

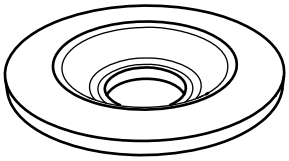

Wear Shoes

Wear Shoes may be manufactured to fit your particular application. For custom wear shoes, please provide your Martin representative with specifications.

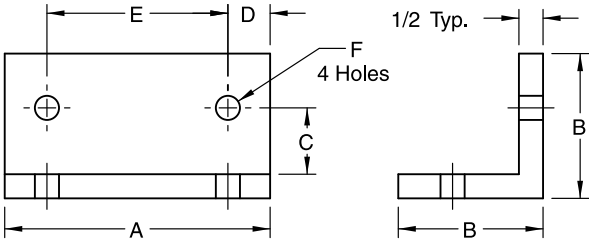

Carrying Wear Shoes

Carrying Wear Shoes

Part Number	A	B	C	D	E	F
WTWS1001	5.5	3	1.31	0.88	3.75	0.5
WTWS1550	5.5	3	1.38	0.88	3.75	0.5
WTWS1600	6	3	1.38	1.13	3.75	0.5

NOTE: Dimensions in inches.

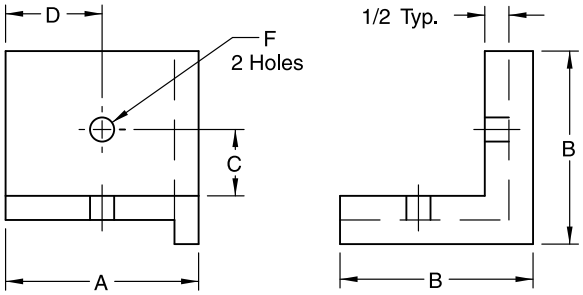

Single Hole Return Wear Shoes

Single Hole Return Wear Shoes

Part Number	A	B	C	D	E	F
WTWS2001	4	3.5	1.31	2	–	0.5
WTWS2450	4	3.5	1.38	2	–	0.5
WTWS2550	4.5	3.5	1.38	2.25	–	0.5

NOTE: Dimensions in inches.

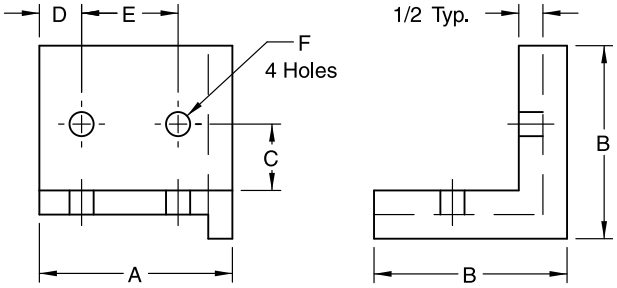

Double Hole Return Wear Shoes

Double Hole Return Wear Shoes

Part Number	A	B	C	D	E	F
WTWS3400	4	3.5	1.38	0.88	2	0.5
WTWS3450	4.5	3.5	1.38	0.88	1	0.5
WTWS3600	6	3.5	1.38	1.13	3.75	0.5

NOTE: Dimensions in inches.

Replacement Parts
For Bottling & Packaging Plant

Martin manufactures star wheels, guides and associated components in a variety of engineering plastics as well as metals, providing you with a single source for all your processing and packaging components.

Martin's 31 branch locations and vast manufacturing capabilities mean we can provide you with the convenience of working with one manufacturer who understands your needs and can ensure all parts work together as required as well as offering fast turnaround on all custom work.

Application:

- Beverage Bottling
- Pharmaceutical Packaging
- Canning
- Food Processing
- Glass Inspection Machines
- Labeling Machines
  - – Cappers
  - – Cleaners
  - – Steamers
  - – Fillers
  - – Labelers
  - – Coders
  - – Pluggers
  - – Pump Placers
  - – Monoblock
  - – Cottoners

Benefits of Plastic Components:

- Exceptional resistance to wear and abrasion
- Food grade approved material – FDA compliant
- High impact strength
- Corrosion and chemical resistance
- Self-lubricating, eliminating routine/costly maintenance
- Low co-efficient of friction
- Light weight – typically 1/7th the weight of steel
- High visibility colors for increased safety - Makes for easy identification of parts
- Significant noise reduction
- No loose hardware

Mounting Options:

- **Standard** - Using OEM original bolt on method of securing and positioning parts.
- **Quick Change** - Requires one-time modifications to your machines to utilize quick change securing methods.

For a Fast & Free Quote

Contact your Martin Distributor

or visit martinsprocket.com

SolidTrack®
Corner Track - Tab Design

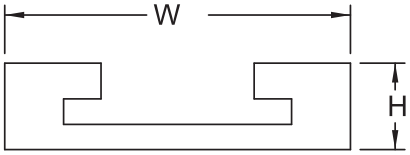

Corner Track – Tab Design

SolidTrack 90º Corners
Tab Design with Extensions — UHMW — White

Part Number	Chain Number	Standard Radius R	W	H
CHNGCT1111NM	SS881T, D880T, D879T, K3-1/4	18", 24", 30"	4	1
CHNGCT1211NM	SS881T, D880T, D879T, K4-1/2	24", 30", 36"	5	1
CHNGCT1221NM	D882TLW K4-1/2	24", 30", 36"	5	1 – 3/8
CHNGCT1421NM	D882TLW K7-1/2	24", 30", 36"	8	1 – 3/8
CHNGCT1521NM	D882TLW K10	24", 30", 36"	10 - _	1 – 3/8
CHNGCT1621NM	D882TLW K12	24", 30", 36"	12 - _	1 – 3/8
CHNGCT1131NM	1873T, 1874T, K3-1/4	18", 24", 30"	4	1 – 3/8
CHNGCT1231NM	1873T, 1874T, K4-1/2	18", 24", 30"	5	1 – 3/8
CHNGCT1331NM	1873T, 1874T, K6	18", 24", 30"	6 - _	1 – 3/8
CHNGCT1431NM	1873T, 1874T, K7-1/2	18", 24", 30"	8	1 – 3/8
CHNGCT1531NM	1873T K10	18", 24", 30"	10 - _	1 – 3/8
CHNGCT1631NM	1873T K12	18", 24", 30"	12 - _	1 – 3/8

NOTE: 4" straight extensions on each end.
Specify radius when ordering.
30" corner radius and above are furnished in two 45° segments.

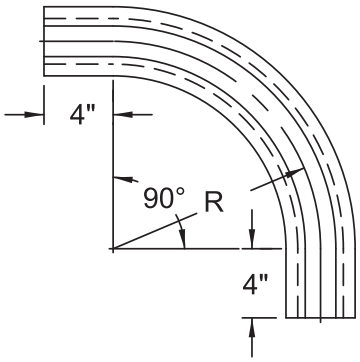

Corner Track – Tab Design with Extensions

SolidTrack 90º Corners
Tab Design without Extensions — UHMW — White

Part Number	Chain Number	Standard Radius R	W	H
CHNGCT1113NM	SS881T, D880T, D879T, K3-1/4	18", 24", 30"	4	1
CHNGCT1213NM	SS881T, D880T, D879T, K4-1/2	24", 30", 36"	5	1
CHNGCT1223NM	D882TLW K4-1/2	24", 30", 36"	5	1 – 3/8
CHNGCT1423NM	D882TLW K7-1/2	24", 30", 36"	8	1 – 3/8
CHNGCT1523NM	D882TLW K10	24", 30", 36"	10 - _	1 – 3/8
CHNGCT1623NM	D882TLW K12	24", 30", 36"	12 - _	1 – 3/8
CHNGCT1133NM	1873T, 1874T, K3-1/4	18", 24", 30"	4	1 – 3/8
CHNGCT1233NM	1873T, 1874T, K4-1/2	18", 24", 30"	5	1 – 3/8
CHNGCT1333NM	1873T, 1874T, K6	18", 24", 30"	6 - _	1 – 3/8
CHNGCT1433NM	1873T, 1874T, K7-1/2	18", 24", 30"	8	1 – 3/8
CHNGCT1533NM	1873T K10	18", 24", 30"	10 - _	1 – 3/8
CHNGCT1633NM	1873T K12	18", 24", 30"	12 - _	1 – 3/8

NOTE: Specify radius when ordering.
30" corner radius and above are furnished in two 45° segments.

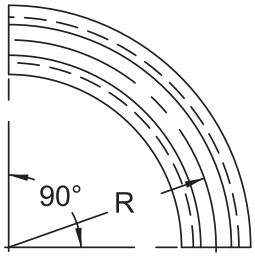

Corner Track – Tab Design without Extensions

SolidTrack® is a registered trademark of Quandrant EPP AG, a Poly Hi Solidur, Inc. Company

SolidTrack®
Corner Track - Bevel Design

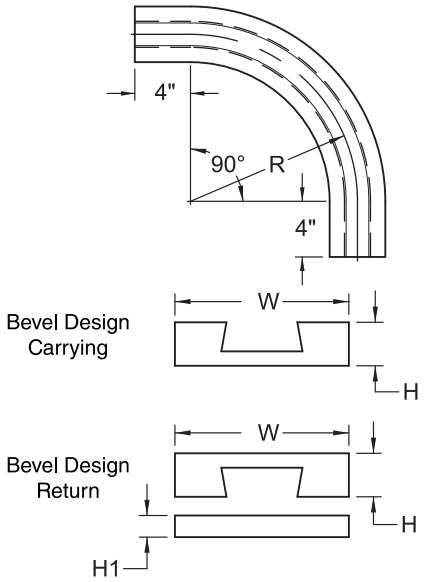

Corner Track – Bevel Design with Extensions

SolidTrack 90º Corners – Carrying

Bevel Design with Extensions — UHMW — White

Part Number	Chain Number	Standard Radius R	W	H
CHNGCB2111-18NM	SS881, D880, D879 K3-1/4	18'	4	1
CHNGCB2111-24NM	SS881, D880, D879 K3-1/4	24"	4	1
CHNGCB2111-30NM	SS881, D880, D879 K3-1/4	30"	4	1
CHNGCB2211-24NM	SS881, D880, D879 K4-1/2	24"	5	1
CHNGCB2211-30NM	SS881, D880, D879 K4-1/2	30"	5	1
CHNGCB2211-36NM	SS881, D880, D879 K4-1/2	36"	5	1

NOTE: 4" straight extensions on each end.
30" corner radius and above are furnished in two 45° segments.

SolidTrack 90º Corners – Return

Bevel Design with Extensions — UHMW — White

Part Number	Chain Number	Standard Radius R	W	H	H1
CHNGCB311118NM	SS881, D880, D879 K3-1/4	18'	4	1	0.625
CHNGCB311124NM	SS881, D880, D879 K3-1/4	24"	4	1	0.625
CHNGCB311130NM	SS881, D880, D879 K3-1/4	30"	4	1	0.625
CHNGCB321124NM	SS881, D880, D879 K4-1/2	24"	5	1	0.625
CHNGCB321130NM	SS881, D880, D879 K4-1/2	30"	5	1	0.625
CHNGCB321136NM	SS881, D880, D879 K4-1/2	36"	5	1	0.625

NOTE: 4" straight extensions on each end.
30" corner radius and above are furnished in two 45° segments.

SolidTrack® is a registered trademark of Quandrant EPP AG, a Poly Hi Solidur, Inc. Company

SolidTrack®
Corner Track - Bevel Design

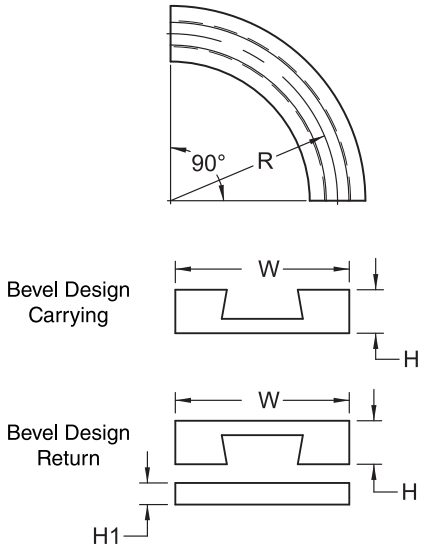

Corner Track – Bevel Design without Extensions

SolidTrack 90º Corners – Carrying

Bevel Design without Extensions

UHMW — White

Part Number	Chain Number	Standard Radius R	W	H
CHNGCB211318NM	SS881, D880, D879 K3-1/4	18'	4	1
CHNGCB211324NM	SS881, D880, D879 K3-1/4	24"	4	1
CHNGCB211330NM	SS881, D880, D879 K3-1/4	30"	4	1
CHNGCB221324NM	SS881, D880, D879 K4-1/2	24"	5	1
CHNGCB221330NM	SS881, D880, D879 K4-1/2	30"	5	1
CHNGCB221336NM	SS881, D880, D879 K4-1/2	36"	5	1

NOTE: 30" corner radius and above are furnished in two 45° segments.

SolidTrack 90º Corners – Return

Bevel Design without Extensions

UHMW — White

Part Number	Chain Number	Standard Radius R	W	H	H1
CHNGCB311318NM	SS881, D880, D879 K3-1/4	18'	4	1	0.625
CHNGCB311324NM	SS881, D880, D879 K3-1/4	24"	4	1	0.625
CHNGCB311330NM	SS881, D880, D879 K3-1/4	30"	4	1	0.625
CHNGCB321324NM	SS881, D880, D879 K4-1/2	24"	5	1	0.625
CHNGCB321330NM	SS881, D880, D879 K4-1/2	30"	5	1	0.625
CHNGCB321336NM	SS881, D880, D879 K4-1/2	36"	5	1	0.625

NOTE: 30" corner radius and above are furnished in two 45° segments.

SolidTrack® is a registered trademark of Quandrant EPP AG, a Poly Hi Solidur, Inc. Company

SolidTrack®
Corner Track - Combination Design

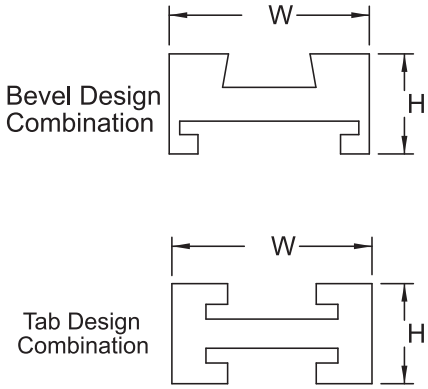

Corner Track Combination Design

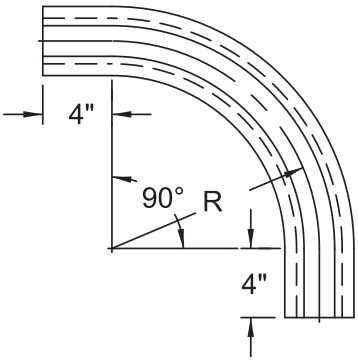

Corner Track – Tab Design with Extensions

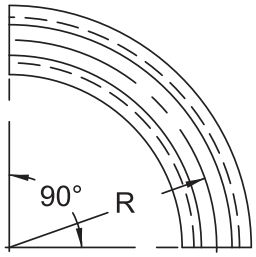

Corner Track – Tab Design without Extensions

SolidTrack 90º Corners – Combination

Tab Design without Extensions

UHMW — White

Part Number	Chain Number	Standard Radius R	W	H
CHNGCCT1113NM	SS881T, D880T, D879T K3-1/4	18", 24", 30"	4	2.00
CHNGCCT1213NM	SS881T, D880T, D879T K4-1/2	24", 30", 36"	5	2.00
CHNGCCT1223NM	D882TLW K4-1/2	24", 30", 36"	5	2.63
CHNGCCT1423NM	D882TLW K7-1/2	24", 30", 36"	8	2.63
CHNGCCT1523NM	D882TLW K10	24", 30", 36"	10 - _	2.63
CHNGCCT1623NM	D882TLW K12	24", 30", 36"	12 - _	2.63
CHNGCCT1133NM	1873T, 1874T K3-1/4	18", 24", 30"	4	2.63
CHNGCCT1233NM	1873T, 1874T K4-1/2	18", 24", 30"	5	2.63
CHNGCCT1333NM	1873T, 1874T K6	18", 24", 30"	6 - _	2.63
CHNGCCT1433NM	1873T, 1874T K7-1/2	18", 24", 30"	8	2.63
CHNGCCT1533NM	1873T, 1874T K10	18", 24", 30"	10 - _	2.63
CHNGCCT1633NM	1873T, 1874T K12	18", 24", 30"	12 – _	2.63

NOTE: 4" straight extensions on each end.
30" corner radius and above are furnished in two 45° segments.

SolidTrack 90º Corners – Combination

Bevel Design without Extensions

UHMW — White

Part Number	Chain Number	Standard Radius R	W	H
CHNGCCB2113NM	SS881, D880, D879 K3-1/4	18", 24", 30"	4	2.00
CHNGCCB2213NM	SS881, D880, D879 K4-1/2	24", 30", 36"	5	2.00

NOTE: 4" straight extensions on each end.
30" corner radius and above are furnished in two 45° segments.

SolidTrack® is a registered trademark of Quandrant EPP AG, a Poly Hi Solidur, Inc. Company

SolidTrack®
Corner Track - Combination Design

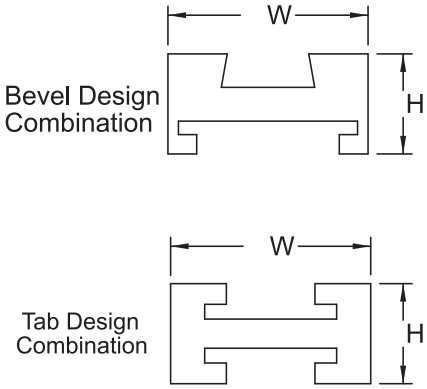

Corner Track Combination Design

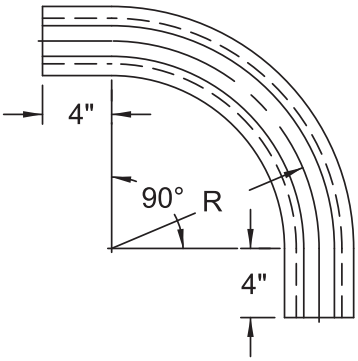

Corner Track – Tab Design with Extensions

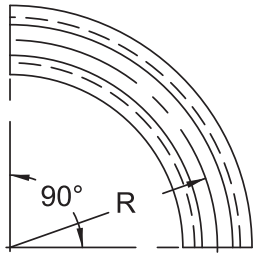

Corner Track – Tab Design without Extensions

SolidTrack 90º Corners – Combination

Tab Design with Extensions — UHMW — White

Part Number	Chain Number	Standard Radius R	W	H
CHNGCCT1111NM	SS881T, D880T, D879T K3-1/4	18", 24", 30"	4	2.00
CHNGCCT1211NM	SS881T, D880T, D879T K4-1/2	24", 30", 36"	5	2.00
CHNGCCT1221NM	D882TLW K4-1/2	24", 30", 36"	5	2.63
CHNGCCT1421NM	D882TLW K7-1/2	24", 30", 36"	8	2.63
CHNGCCT1521NM	D882TLW K10	24", 30", 36"	10 - _	2.63
CHNGCCT1621NM	D882TLW K12	24", 30", 36"	12 - _	2.63
CHNGCCT1131NM	1873T, 1874T K3-1/4	18", 24", 30"	4	2.63
CHNGCCT1231NM	1873T, 1874T K4-1/2	18", 24", 30"	5	2.63
CHNGCCT1331NM	1873T, 1874T K6	18", 24", 30"	6 - _	2.63
CHNGCCT1431NM	1873T, 1874T K7-1/2	18", 24", 30"	8	2.63
CHNGCCT1531NM	1873T K10	18", 24", 30"	10 - _	2.63
CHNGCCT1631NM	1873T K12	18", 24", 30"	12 – _	2.63

NOTE: 4" straight extensions on each end.
30" corner radius and above are furnished in two 45° segments.

SolidTrack 90º Corners – Combination

Bevel Design with Extensions — UHMW — White

Part Number	Chain Number	Standard Radius R	W	H
CHNGCCB2111NM	SS881, D880, D879 K3-1/4	18", 24", 30"	4	2.00
CHNGCCB2211NM	SS881, D880, D879 K4-1/2	24", 30", 36"	5	2.00

NOTE: 4" straight extensions on each end.
30" corner radius and above are furnished in two 45° segments.

SolidTrack® is a registered trademark of Quandrant EPP AG, a Poly Hi Solidur, Inc. Company

SolidTrack® Straight Track - Tab, Bevel & Combination Design

SolidTrack – Straight Tab Design UHMW — White

Part Number	Chain Number	Standard Radius R	W	H
CHNGST1112NM	SS881T, D880T, D879T K3-1/4	10'	4	1.00
CHNGST1212NM	SS881T, D880T, D879T K4-1/2	10'	5	1.00
CHNGST1222NM	D882TLW K4-1/2	10'	5	1.38
CHNGST1422NM	D882TLW K7-1/2	10'	8	1.38
CHNGST1522NM	D882TLW K10	10'	10 - _	1.38
CHNGST1622NM	D882TLW K12	10'	12 - _	1.38
CHNGST1132NM	1873T, 1874T, K3-1/4	10'	4	1.38
CHNGST1232NM	1873T, 1874T, K4-1/2	10'	5	1.38
CHNGST1332NM	1873T, 1874T, K6	10'	6 - _	1.38
CHNGST1432NM	1873T, 1874T, K7-1/2	10'	8	1.38
CHNGST1532NM	1873T K10	10'	10 - _	1.38
CHNGST1632NM	1873T K12	10'	12 - _	1.38

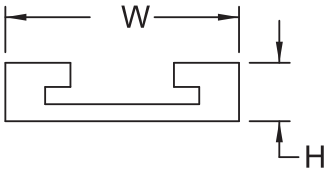

Straight Track – Tab Design

SolidTrack Straight – Carrying Bevel Design UHMW — White

Part Number	Chain Number	Standard Radius R	W	H
CHNGSB2112NM	SS881, D880, D879, K3-1/4	10'	4	1.00
CHNGSB2212NM	SS881, D880, D879, K4-1/2	10'	5	1.00

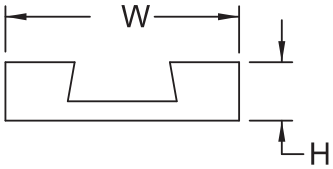

SolidTrack Straight – Return Bevel Design UHMW — White

Part Number	Chain Number	Standard Radius R	W	H	H1
CHNGSB3112NM	SS881, D880, D879, K3-1/4	10'	4	1.00	0.625
CHNGSB3212NM	SS881, D880, D879, K4-1/2	10'	5	1.00	0.625

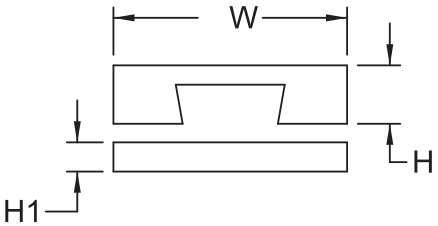

Straight Track – Bevel Design

SolidTrack Straight – Combination Tab Design UHMW — White

Part Number	Chain Number	Standard Lengths
CHNGSC1112NM	SS881T, D880T, D879T K3-1/4	10'
CHNGSC1212NM	SS881T, D880T, D879T K4-1/2	10'
CHNGSC1222NM	D882TLW K4-1/2	10'
CHNGSC1422NM	D882TLW K7-1/2	10'
CHNGSC1522NM	D882TLW K10	10'
CHNGSC1622NM	D882TLW K12	10'
CHNGSC1132NM	1873T, 1874T, K3-1/4	10'
CHNGSC1232NM	1873T, 1874T, K4-1/2	10'
CHNGSC1332NM	1873T, 1874T, K6	10'
CHNGSC1432NM	1873T, 1874T, K7-1/2	10'
CHNGSC1532NM	1873T K10	10'
CHNGSC1632NM	1873T K12	10'

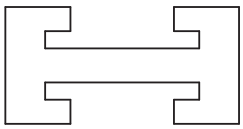

Straight Track – Tab Design Combination

SolidTrack Straight – Combination Bevel Design UHMW — White

Part Number	Chain Number	Standard Lengths
CHNGSC2112NM	SS881, D880, D879, K3-1/4	10'
CHNGSC2212NM	SS881, D880, D879, K4-1/2	10'

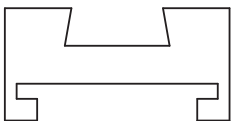

Straight Track – Bevel Design Combination

SolidTrack® is a registered trademark of Quandrant EPP AG, a Poly Hi Solidur, Inc. Company

Radius Curve Wearstrip For Flat Top Chain

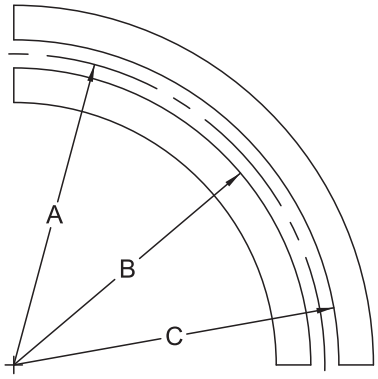

Radius Curve Wearstrip

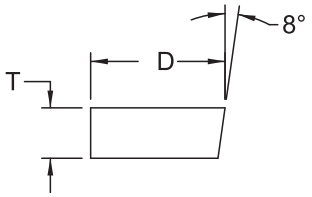

Bevel Chain Design

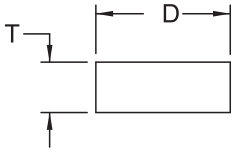

Tab Chain Design

Radius Curve Wearstrip — Bevel Design — UHMW — White

Part Number	Wearstrip No.	Chain No.	Nom. Corner Radius A	Track Radius		Width D	Thickness T (+0, -1/16)
				Inside B	Outside C		
CHNGWB1813NM	U18B3	880, 881	18	17.1875	18.8125	1.00	0.375
CHNGWB2413NM	U24B3	880, 881	24	23.1875	24.8125	1.00	0.375
CHNGWB3013NM	U30B3	880, 881	30	29.1875	30.8125	1.50	0.375
CHNGWB2415NM	U24B5	882	24	22.859375	25.140625	1.50	0.625
CHNGWB3015NM	U30B5	882	30	28.859375	31.140625	1.50	0.625

NOTE: 30" radius furnished in two 45° segments to make one 90° segment. All others are 90° segment.
Dimensions in inches.

Radius Curve Wearstrip — Tab Design — UHMW — White

Part Number	Wearstrip No.	Chain No.	Nom. Corner Radius A	Track Radius		Width D	Thickness T (+0, -1/16)
				Inside B	Outside C		
CHNGWT1803NM	U18R3	880, 881	18	17.125	18.875	1.50	0.375
CHNGWT2403NM	U24R3	880, 881	24	23.125	24.875	1.50	0.375
CHNGWT3003NM	U30R3	880, 881	30	29.125	30.875	1.50	0.375
CHNGWT2405NM	U24R5	882	24	22.859375	25.140625	1.50	0.625
CHNGWT3005NM	U30R5	882	30	28.859375	31.140625	1.50	0.625
CHNGWT1806NM	U18R6	1873, 1874, 3873	18	17.3125	18.6875	1.50	0.75
CHNGWT2406NM	U24R6	1873, 1874, 3873	24	23.3125	24.6875	1.50	0.75
CHNGWT3006NM	R30R6	1873, 1874, 3873	30	29.3125	30.6875	1.50	0.75

NOTE: 30" radius furnished in two 45° segments to make one 90° segment. All others are 90° segment.
Dimensions in inches.

SolidTrack® Straight Track - Tab, Bevel & Combination Design

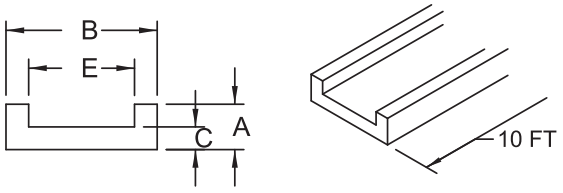

Type A

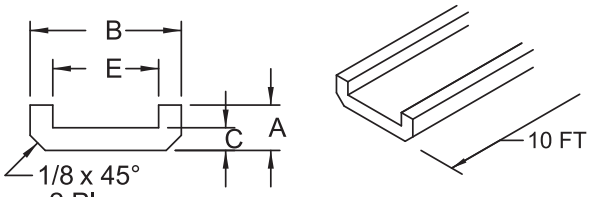

Type B

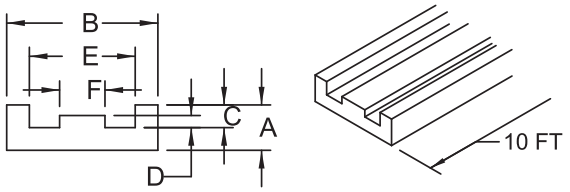

Type B

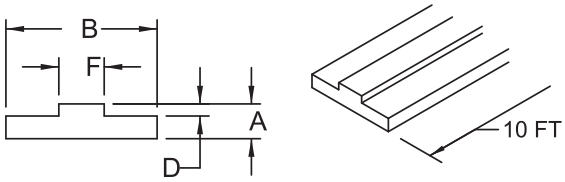

Type D

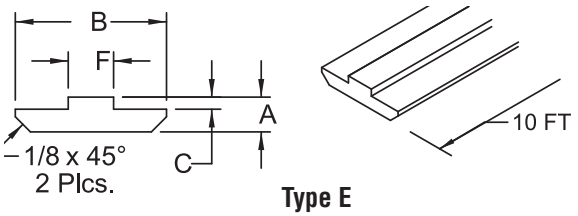

Type E
for use with U channel

Chain Guide Raceway

UHMW — White

Part Number	Type	ANSI Chain No.	A Minimum	B Minimum	C	D	E	F
CHNGR1040NM	A	2040	0.31	1.25	0.19	–	0.88	–
CHNGR1050NM	A	2050	0.38	1.25	0.22	–	1.00	–
CHNGR1060NM	A	2060	0.38	1.50	0.19	–	1.25	–
CHNGR1080NM	A	2080	0.50	2.00	0.25	–	1.56	–
CHNGR1100NM	A	2100	0.63	2.25	0.31	–	1.88	–
CHNGR1120NM	A	2120	0.63	2.75	0.25	–	2.25	–
CHNGR1003NM	A	H78/S188	1.25	4.25	0.38	–	3.50	–
CHNGR1004NM	A	81X/1578	1.00	3.00	0.38	–	2.50	–
CHNGR0040NM	B	2040	0.31	1.25	0.19	–	0.88	–
CHNGR0050NM	B	2050	0.38	1.25	0.22	–	1.00	–
CHNGR0060NM	B	2060	0.38	1.50	0.19	–	1.25	–
CHNGR0080NM	B	2080	0.50	2.00	0.25	–	1.56	–
CHNGR0100NM	B	2100	0.63	2.25	0.31	–	1.88	–
CHNGR0120NM	B	2120	0.63	2.75	0.25	–	2.25	–
CHNGR2040NM	C	2040	0.31	1.00	0.14	0.08	0.69	0.25
CHNGR2050NM	C	2050	0.38	1.25	0.81	0.10	0.81	0.31
CHNGR2060NM	C	2060	0.50	1.50	0.21	0.12	1.13	0.44
CHNGR2080NM	C	2080	0.50	2.00	0.25	0.13	1.44	0.56
CHNGR5040NM	D	2040	0.31	1.00	0.08	–	–	0.25
CHNGR5050NM	D	2050	0.31	1.25	0.10	–	–	0.31
CHNGR5060NM	D	2060	0.31	1.25	0.12	–	–	0.44
CHNGR5080NM	D	2080	0.38	1.50	0.13	–	–	0.56
CHNGR5100NM	D	2100	0.50	2.00	0.21	–	–	0.69
CHNGR5120NM	D	2120	0.50	2.25	0.26	–	–	0.94
CHNGR6040NM	E	2040	0.31	1.00	0.80	–	–	0.25
CHNGR6050NM	E	2050	0.31	1.25	0.10	–	–	0.31
CHNGR6060NM	E	2060	0.31	1.25	0.12	–	–	0.44
CHNGR6080NM	E	2080	0.38	1.50	0.13	–	–	0.56
CHNGR6100NM	E	2100	0.50	2.00	0.21	–	–	0.69
CHNGR6120NM	E	2120	0.50	2.25	0.26	–	–	0.94

NOTE: 30" radius furnished in two 45° segments to make one 90° segment. All others are 90° segment.
Dimensions in inches.

UltraTrac Chain Guides
For ANSI Standard Roller Chain

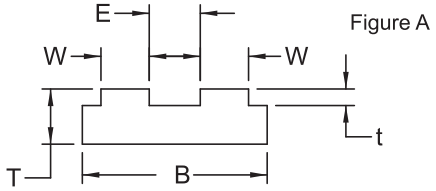

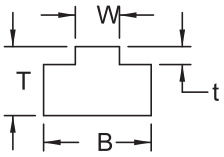

UltraTrac Chain Guide – Type T

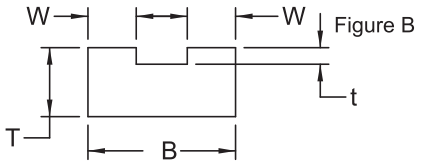

UltraTrac Chain Guide – Type TD

Type T
For ANSI Standard Roller Chain — UHMW — White

Part Number	ANSI Chain No.	B	T	W	t
CHNGUTT2825NM	25	0.78	0.59	0.10	0.09
CHNGUTT2835NM	35	0.78	0.59	0.17	0.10
CHNGUTT2840NM	40	0.78	0.59	0.29	0.10
CHNGUTT2850NM	50	0.78	0.59	0.36	0.12
CHNGUTT2860NM	60	1.10	0.59	0.47	0.15
CHNGUTT2880NM	80	1.34	0.71	0.60	0.18
CHNGUTT2810NM	100	1.61	1.00	0.72	0.26
CHNGUTT2812NM	120	2.01	1.25	0.96	0.31
CHNGUTT2814NM	140	2.17	1.50	0.96	0.36
CHNGUTT2816NM	160	2.61	1.50	1.21	0.42
CHNGUTT2818NM	180	2.88	1.50	1.35	0.47

NOTE: Standard guide length is 10 ft.
Diimensions in inches

Type TD
For Double Strand ANSI Standard Roller Chain — UHMW — White

Part Number	ANSI Chain No.	B	T	W	t	E	Fig.
CHNGUTTD2925NM	25-2	0.78	0.59	0.1	0.09	0.15	A
CHNGUTTD2935NM	35-2	0.78	0.59	0.17	0.1	0.23	A
CHNGUTTD2940NM	40-2	0.85	0.59	0.29	0.1	0.27	B
CHNGUTTD2950NM	50-2	1.07	0.59	0.35	0.12	0.37	B
CHNGUTTD2960NM	60-2	1.34	0.59	0.47	0.15	0.4	B
CHNGUTTD2980NM	80-2	1.75	0.71	0.6	0.18	0.55	B

NOTE: Standard guide length is 10 ft.
Diimensions in inches

UltraTrac Chain Guides
For ANSI Standard Roller Chain

Type U
For ANSI Standard Roller Chain — UHMW — White

Part Number	ANSI Chain No.	B	T	T2	T3	D2	H
CHNGUTU3025NM	25	0.78	0.59	0.09	0.13	0.12	0.27
CHNGUTU3035NM	35	0.78	0.59	0.15	0.22	0.16	0.39
CHNGUTU3040NM	40/2040	0.78	0.59	0.18	0.26	0.21	0.51
CHNGUTU3050NM	50/2050	1.10	0.71	0.24	0.35	0.28	0.67
CHNGUTU3060NM	60/2060	1.10	0.71	0.28	0.41	0.32	0.78
CHNGUTU3080NM	80/2080	1.50	0.79	0.30	0.47	0.43	1.04

NOTE: Standard guide length is 10 ft.
Diimensions in inches.

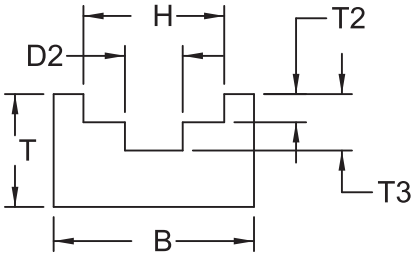

UltraTrac Chain Guide – Type U

Type K
For ANSI Standard Roller Chain — UHMW — White

Part Number	ANSI Chain No.	B	T	T2	T3	D1	H
CHNGUTK3125NM	25	0.78	0.88	0.10	0.24	0.15	0.27
CHNGUTK3135NM	35	0.78	0.88	0.17	0.40	0.22	0.39
CHNGUTK3140NM	40/2040	1.10	1.05	0.29	0.52	0.33	0.51
CHNGUTK3150NM	50/2050	1.50	1.43	0.35	0.61	0.42	0.67
CHNGUTK3160NM	60/2060	1.50	1.85	0.47	0.88	0.49	0.78
CHNGUTK3180NM	80/2080	1.50	2.45	0.60	1.19	0.65	1.04

NOTE: Standard guide length is 10 ft.
Diimensions in inches.

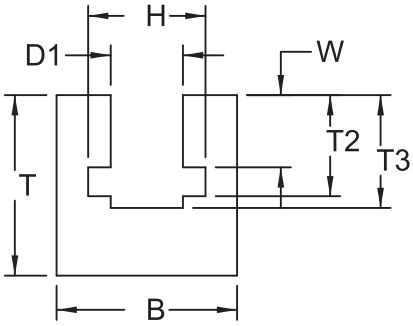

UltraTrac Chain Guide – Type U

Type U
For ANSI Standard Roller Chain — UHMW — White

Part Number	ANSI Chain No.	B	T	T2	T3	D1	H
CHNGUTU3025NM	25	0.78	0.59	0.09	0.13	0.12	0.27
CHNGUTU3035NM	35	0.78	0.59	0.15	0.22	0.16	0.39
CHNGUTU3040NM	40/2040	0.78	0.59	0.18	0.26	0.21	0.51
CHNGUTU3050NM	50/2050	1.10	0.71	0.24	0.35	0.28	0.67
CHNGUTU3060NM	60/2060	1.10	0.71	0.28	0.41	0.32	0.78
CHNGUTU3080NM	80/2080	1.50	0.79	0.30	0.47	0.43	1.04

NOTE: Standard guide length is 10 ft.
Diimensions in inches.

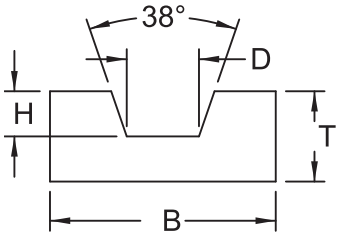

UltraTrac Chain Guide – Type U

UltraTrac Chain Guides For ANSI Standard Roller Chain

MATERIAL	COMMON APPLICATIONS
UHMW	
• Excellent abrasion resistance • Low co-efficient of friction • Shear strength of approximately 3,500 psi • Flexural mod. of approximately 125,000 psi • Economical • Floats in water • Two common types: » Natural virgin – Food applications » Black reprocessed – Resistant to UV degradation – Slightly less expensive – May have multi-colored specks	• Wear strips • Chain guide • Conveyor beds • Large structural components • RC sprockets (usually 50 series and larger) • Mill Sprockets (Engineering Class) (nearly always black reprocessed UHMW) • Bushings
Nylon	
• Good abrasion resistance • Excellent PV value for bearing applications • Shear strength of approximately 10,500 psi • Flexural mod. of approximately 500,000 psi • Mid-priced • Does not float in water • Will absorb moisture resulting in dimensional changes and reduced strength • Several common types: » Natural – Food applications » MD filled (dark grey color) – High load bushings » Oil-filled (natural or green color) – Gears, bushings, other sliding wear components	• High temperature wear strips • Small structural components • Bushings • Spur Gears • RC sprockets (usually 50 series and smaller)
Acetal	
• Typically used for structural components • Not great for wear applications • Shear strength of approximately 8,000 psi • Flexural mod. of approximately 400,000 psi • Mid-priced • Does not float in water • Does not absorb moisture, good dimensional stability • Also known as DuPont® Delrin® acetal resin. • Available in white, or black.	• High temperature wear strips • Small structural components • RC sprockets (usually 50 series and smaller). • Bushings • Spur gears • Components of food processing equipment exposed to wet environments clamps, rollers, dies.

DuPont® and Delrin® is a registered trademarks or trademarks of E. I. du Pont de Nemours and Company or its affiliates.