INTERCHANGEABLE BUSHINGS

PRODUCT **PAGE**

INDEX **B-1**

QD . . . . . **B-2 – B-6**

QD BUSHING INSTALLATION/REMOVAL B-2

ALL STEEL QD BUSHINGS B-3

STANDARD QD BUSHINGS. B-4

QD SHORT BUSHINGS B-5

QD AND QD SHORT WELD-ON HUBS. B-6

TAPER BUSHINGS . . . . . **B-7 – B-12**

TAPER BUSHING INSTALLATION/REMOVAL B-7

NO. 1008 — 3030 TAPER BUSHINGS B-8

NO. 3535 — 5050 TAPER BUSHINGS B-9

NO. 4030 — 5040 SHORT TAPER BUSHINGS B-9

NO. 6050 — 120100 TAPER BUSHINGS B-10

TAPER BUSHED TYPE S AND TYPE W WELD-ON HUBS B-11

METRIC AND REBORABLE TAPER BUSHING DIMENSIONS. B-12

MST® BUSHINGS. . . . . **B-13 – B-16**

MST® INSTALLATION AND REMOVAL B-13

MST® BUSHING SPECIFICATIONS B-14

MST® WELD-ON HUBS. B-15

IDLER BUSHINGS: QD AND MST®. B-16

Stock QD Bushings

Martin MOUNTING PROCEDURE – QD BUSHINGS

IMPORTANT – BE SURE TAPERED CONE SURFACES OF QD BUSHING AND INSIDE OF SHEAVE OR SPROCKET HUB ARE DRY AND FREE OF ALL FOREIGN SUBSTANCES SUCH AS PAINT, GREASE, OR DIRT.

STANDARD MOUNTING ASSEMBLY FOR QD SHEAVES AND SPROCKETS

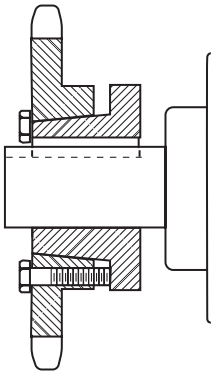

MOUNTING

1. Be sure the tapered cone surfaces of the bushing and the inside of the driven product are clean and free of anti-seize lubricants.
2. Slide QD bushing on shaft, flange end first. Assemble key.
3. Position QD bushing on shaft. Tighten set screw over key "hand tight" with standard Allen wrench only. Do not use excessive force.
4. Slide large end of sheave or sprocket taper bore into position over cone aligning drilled bolt holes in sheave or sprocket with tapped holes in flange of bushing. Assemble pull-up bolts and lock washers.
   NOTE: Install M thru S bushings in the hub so that the two extra holes in the hub are located as far as possible from the bushing's saw cut.
5. Tighten pull-up bolts alternately and evenly to tightness indicated in torque table on back. Do not use extensions on wrench handles. There should be a gap between the face of the sheave or sprocket hub and the flange of the QD bushing to insure a satisfactory cone grip and press fit.
   CAUTION: THIS GAP MUST NOT BE CLOSED.

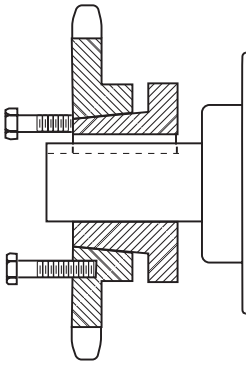

DISMOUNTING

1. Remove pull-up bolts and screw them into TAPPED holes in sheave or sprocket and against flange of QD bushing to break cone grip.
1. Loosen set screw and slide QD bushing from shaft.

WARNING: Because of the possible danger to person(s) or property from accidents which may result from the improper use of products, it is important that correct procedures be followed: Products must be used in accordance with the engineering information specified in the catalog. Proper installation, maintenance and operation procedures must be observed. The instructions given above must be followed. Inspections should be made as necessary to assure safe operation under prevailing conditions. All rotating power transmission products when used in a drive are potentially dangerous and must be guarded by the user as required by applicable laws, regulations, standards, and good safety practice. (Refer to ANSI Standard B15.1.)

REVERSE Mounting Assembly

FOR QD SHEAVES AND SPROCKETS USING JA, SH, SD, SDS, SK, SF, E, F, AND J BUSHINGS

These bushings, as well as the sprockets and sheaves for them, are each drilled with six holes (three drilled and three tapped) to allow pull-up bolts to be inserted from either side. This enables variations of mounting characteristics to suit a particular installation.

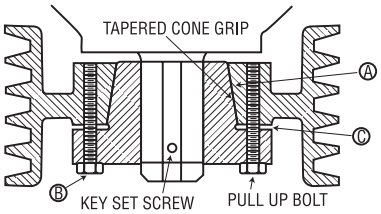

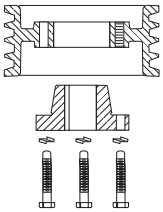

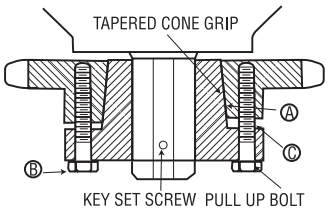

1. Be sure the tapered cone surfaces of the bushing and the inside of the driven product are clean and free of anti-seize lubricants.
2. Assemble sheave or sprocket with bolts inserted (But not tightened) through DRILLED holes in bushing flange into TAPPED holes in sheave, sprocket, or other Martin QD part.
3. With key in shaft keyseat, slide assembly into approximate position on shaft with flange end of bushing away from bearing.
4. Position QD bushing on shaft by tightening set screw over key "hand tight" with standard Allen wrench only. Do not use excessive force.
5. Tighten pull-up bolts alternately and evenly to tightness indicated in torque table below. Do not use extensions on wrench handles. There should be a gap between the face of the sheave or sprocket hub and the flange of the QD bushing to insure a satisfactory cone grip and press fit. CAUTION: THIS GAP MUST NOT BE CLOSED.

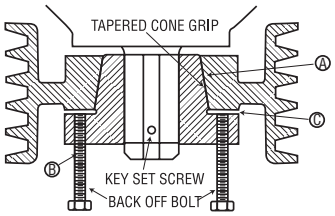

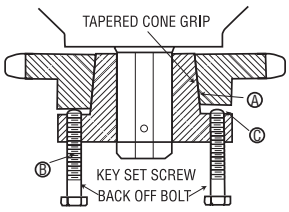

1. Remove pull-up bolts and screw them into TAPPED holes in bushing flange and against hub of sheave or sprocket to break cone grip.
2. Loosen set screw in bushing flange and slide QD bushing from shaft.

CAUTION

WARNING: USE OF ANTI-SEIZE LUBRICANT ON TAPERED CONE SURFACE OR ON BOLT THREADS WHEN MOUNTING MAY RESULT IN DAMAGE TO SHEAVE AND SPROCKETS. THIS VOIDS ALL MANUFACTURER'S WARRANTIES

BOLT TORQUE TABLE

QD Bushing Size	Set Screw	Wrench Torque in./lbs.
JA	10 – 24	60
SH, SDS, SD	.25 – 20	108
SK	.3125 – 18	180
SF	.375 – 16	360
E	.5 – 13	720
F	.5625 – 12	900
J	.625 – 11	1620
M	.75 – 10	2700
N	.875 – 9	3600
P	1 – 8	5400
W	1.125 – 7	7200
S	1.25 – 7	9000

All Steel QD Bushings

★**F** = Length of Mating Bore

★★**G** = Gap Between QD Bushing and Mating Hub

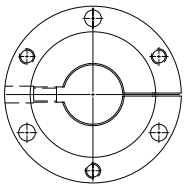

Bushings: "JA" to "J" inclusive

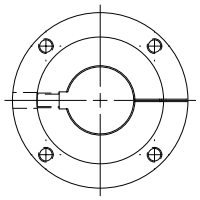

Bushings: "M" to "W" inclusive

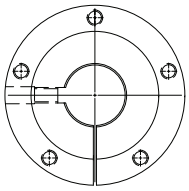

Bushing: "S"

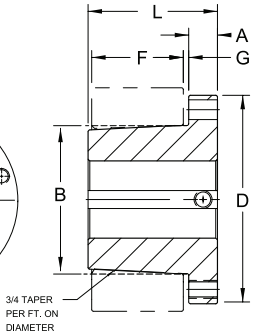

Bushing	Dimensions (Inches)								Screws Required	Stock Bore Range			Average Weight (Approx.)
	A	B	D	E	★F	★★G	L	Cap Bolt Circle		Min.	Maximum		
											Standard Keyway	Shallow Keyway	
SF-STL	.563	3.125	4.625	1.5	1.25	.125	2.063	3.875	3.375 × 2	.5	2.313	2.813	3.0
E-STL	.75	3.834	6	1.875	1.625	.125	2.625	5	3.5 × 2.75	.875	2.875	3.5	10.0
F-STL	.813	4.437	6.625	2.813	2.5	.188	3.625	5.625	3.563 × 3.625	1	3.313	4	11.5
J-STL	1	5.148	7.25	3.5	3.188	.188	4.5	6.25	3.625 × 4.5	1.438	3.75	4.5	18.0
M-STL	1.25	6.5	9	5.5	5.188	.188	6.75	7.875	4.75 × 6.75	2	4.75	5.5	37.0
N-STL	1.5	7	10	6.625	6.25	.438	8.125	8.5	4.875 × 8.5	2.5	5.125	5.875	57.0

Bushing	Bores	Keyway
SF-STL	2.375 – 2.563	.625 × .188
	2.625 – 2.75	.625 × .063
	2.813 – 2.875	.75 × .063
	2.938	.75 × .031
	.875 – 2.875	STD.
E-STL	2.938 – 3.25	.75 × .125
	3.313 – 3.5	.875 × .063
F-STL	1 – 3.313	STD.
	3.375 – 3.75	.875 × .188
	3.875 – 3.938	1 × .125
	4	NONE
J-STL	3.438 – 3.75	STD.
	3.813 – 4.5	1 × .125
	2 – 4.75	STD.
M-STL	4.813 – 5.5	1.25 × .25
	2.5 – 5.125	STD.
N-STL	5.188 – 5.5	1.25 × .25
	5.563 – 5.875	1.5 × .25

Bushing	Plain Bores Not Split
SH-STL	.5
SD-STL	.5
SK-STL	.5
SF-STL	.5
E-STL	.875 – 1.938
F-STL	1 – 2.438 – 2.938
J-STL	1.438 – 2.938
M-STL	2 – 2.938
N-STL	2.438 – 4.938

Shallow Key Dimension — Standard			
Keyset	Key	Keyset	Key
.25 × .031	.25 × .156	.75 × .125	.75 × .5
.25 × .063	.25 × .188	.875 × .063	.875 × .5
.375 × .031	.375 × .219	.875 × .188	.875 × .625
.375 × .063	.375 × .25	1 × .125	1 × .625
.375 × .125	.375 × .313	1.25 × .25	1.25 × .875
.5 × .031	.5 × .281	1.5 × .125	1.5 × .875
.5 × .063	.5 × .313	1.5 × .25	1.5 × 1
.5 × .125	.5 × .375	1.75 × .125	1.75 × .75
.625 × .063	.625 × .375	1.75 × .25	1.75 × .875
.75 × .063	.75 × .438	2 × .25	2 × 1

Shallow Key Dimension — Steel			
Keyset	Key	Keyset	Key
.25 × .031	.25 × .156	.75 × .063	.75 × .438
.25 × .063	.25 × .188	.75 × .125	.75 × .5
.375 × .031	.375 × .219	.875 × .063	.875 × .5
.375 × .063	.375 × .25	.875 × .188	.875 × .625
.375 × .125	.375 × .313	1 × .125	1 × .625
.5 × .031	.5 × .094	1.25 × .25	1.25 × .875
.5 × .063	.5 × .313	1.5 × .25	1.5 × 1
.5 × .125	.5 × .375	1.75 × .125	1.75 × .75
.625 × .063	.625 × .375	1.75 × .375	1.75 × 1
.625 × .188	.625 × .5	2 × .25	2 × 1

Shallow Key Dimension — Standard		
Bores	Keyset	Key
.875	.188 × .094	.188 × .188
.938 – 1.25	.25 × .125	.25 × .25
1.313 – 1.375	.313 × .156	.313 × .313
1.438 – 1.75	.375 × .188	.375 × .375
1.813 – 2.25	.5 × .25	.5 × .5
2.313 – 2.75	.625 × .313	.625 × .625
2.813 – 3.25	.75 × .375	.75 × .75
3.313 – 3.75	.875 × .438	.875 × .875
3.813 – 4.5	1 × .5	1 × 1
4.563 – 5.5	1.25 × .625	1.25 × 1.25
5.563 – 6.5	1.5 × .75	1.5 × 1.5
6.563 – 7.5	1.75 × .75	1.75 × 1.5
7.563 – 9	2 × .75	2.5 × 1.5
9.063 – 11	2.5 × .875	—
1.688 – 13	3 × 1	—

Reborable QD bushings made of Stainless Steel are available in many sizes. Non stock sizes are available on MTO basis.

Standard QD Bushings

Bushing	Dimensions (Inches)								Cap Screws Required	Stock Bore Range			Set Screw Size	Average Weight (lb)
	A	B	D	E	F	G	L	Bolt Circle		Min.	Maximum			
											Standard Keyway	Shallow Keyway		
JA	.375	1.375	2	.688	.563	.210	1	1.665	3 – 10 × 1	.375	1	1.25	10 – 24	0.9
SH	.438	1.871	2.688	.875	.813	.243	1.25	2.25	3 – .25 × 1.375	.5	1.375	1.688	.25 – 20	1.0
SDS	.5	2.187	3.188	.875	.75	.265	1.315	2.688	3 – .25 × 1.375	.5	1.688	2	.25 – 20	1.0
SD	.5	2.187	3.188	.938	1.25	.260	1.813	2.688	3 – .25 × 1.875	.5	1.688	1.938	.25 – 20	1.5
SK	.563	2.812	3.875	1.375	1.25	.317	1.875	3.313	3 – .313 × 2	.5	2.125	2.5	.313 – 18	2.0
SF	.563	3.125	4.625	1.5	1.25	.322	2	3.875	3 – .375 × 2	.5	2.313	2.316	.313 – 18	3.0
E	.75	3.834	6	1.875	1.625	.327	2.625	5	3 – .5 × 2.75	.875	2.875	3.5	.375 – 16	10.0
F	.813	4.437	6.625	2.813	2.5	.423	3.625	5.625	3 – .563 × 3.625	1	3.313	3.938	.5 – 13	11.5
J	1	5.148	7.25	3.5	3.188	.423	4.5	6.25	3 – .625 × 4.5	1.438	3.75	4.5	.625 – 11	18.0
M	1.25	6.5	9	5.5	5.188	.423	6.75	7.875	4 – .75 × 6.75	1.938	4.75	5.5	.75 – 10	37.0
N	1.5	7	10.25	6.625	6.25	.423	8.125	8.5	4 – .875 × 8.5	2.438	5.125	6	.75 – 10	57.0
P	1.75	8.25	11.75	7.625	7.25	.423	9.375	10	4 – 1 × 9.5	2.938	5.938	7	.875 – 9	120.0
W	2	10.437	15	9.375	9	.564	11.375	12.75	4 – 1.125 × 11.5	4	7.5	8.5	1 – 8	250.0
S	3.25	12.125	17.75	12.5	–	.814	15.75	15	5 – 1.25 × 15.5	6	8.25	10	1.25 – 7	400.0

Inch Bore

Bushing	Bores	Keyway
JA	.375 – .438	NO K.W.
	.5 – 1	STD.
	1.063 – 1.125	.25 – .063
	.813	.25 – .063
	1.25	NO K.W.
SH	.5 – 1.375	STD
	1.438 – 1.5	.375 × .063
	1.563 – 1.625	.375 × .063
	1.688	NO K.W.
SDS	.5 – 1.688	STD.
	1.75	.375 × .125
	1.813	.5 × .125
	1.875 – 1.938	.5 × .063
	2	NO K.W.
SD	.5 – 1.688	STD.
	1.75	.375 × .125
	1.813	.5 × .125
	1.875	.5 × .063
	1.938	.5 × .063
	2	NO K.W.
SK	.5 – 2.125	STD.
	2.188 – 2.25	.5 × .125
	2.313 – 2.5	.625 × .063
	2.563 – 2.625	NO K.W.
SF	.5 – 2.25	STD.
	2.313 – 2.5	.625 × .188
	2.563 – 2.75	.625 × .063
	2.813 – 2.875	.75 × .063
	2.938	.75 × .031
E	.875 – 2.875	STD.
	2.938 – 3.25	.75 × .125
	3.375 – 3.5	.875 × .063
	3.313	.875 × .125
F	1 – 3.313	STD.
	3.375 – 3.75	.875 × .188
	3.875 – 3.938	1 × .125
	4	NONE
J	1.25 – 3.75	STD.
	3.813 – 4.5	1 × .125
M	2 – 4.75	STD.
	4.813 – 5.5	1.25 × .25
N	2.438 – 5	STD.
	5.125 – 5.5	1.25 × .25
	5.563 – 6	1.5 × .25
P	2.938 – 5.938	STD.
	6 – 6.5	1.5 × .25
	6.563 – 7	1.75 × .125
W	4 – 7.5	STD.
	7.563 – 8.5	2 × .25

Keystock provided for nonstandard keyways.

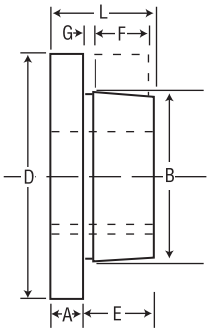

★ Important — The metric system does not refer to keyseat or keyway dimensions as does the English system; instead, dimensions are given for the key itself which is rectangular in shape, not square as in the English system.

NOTE:
.03937" = 1mm
Ex—24 mm = 0.94488"

TO ORDER:
SH 24 mm

Millimeter Bore

Bushing	Bores MM	Key Stock Size ★ w × t
SH	24, 25, 28, 30	8 × 7
	32, 35	10 × 8
SDS	24, 25, 28, 30	8 × 7
	32, 35, 38	10 × 8
	40, 42	12 × 8
SD	24, 25, 28, 30	8 × 7
	32, 35, 38	10 × 8
	40, 42	12 × 8
SK	24, 25, 28, 30	8 × 7
	32, 35, 38	10 × 8
	40, 42	12 × 8
	48, 50	14 × 9
	55	16 × 10
SF	28, 30	8 × 7
	32, 35, 38	10 × 8
	40, 42	12 × 8
	48, 50	14 × 9
	55	16 × 10
	60	18 × 11
E	35, 38	10 × 8
	40, 42	12 × 8
	48, 50	14 × 9
	55	16 × 10
	60, 65	18 × 11
	70, 75	20 × 12
F	48, 50	14 × 9
	55	16 × 10
	60, 65	18 × 11
	70, 75	20 × 12
	80, 85	22 × 14
	90	25 × 14
J	50	14 × 9
	55	16 × 10
	60, 65	18 × 11
	70, 75	20 × 12
	80, 85	22 × 14
	90, 95	25 × 14
	100	28 × 16

QD Short Bushings

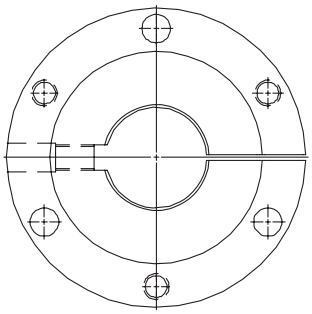

Bushings:
JS

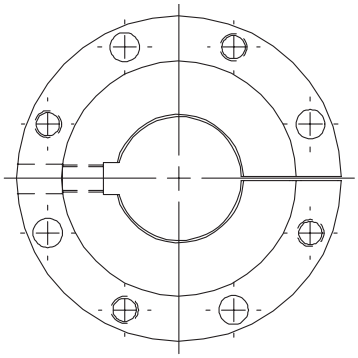

Bushings:
MS to WS inclusive

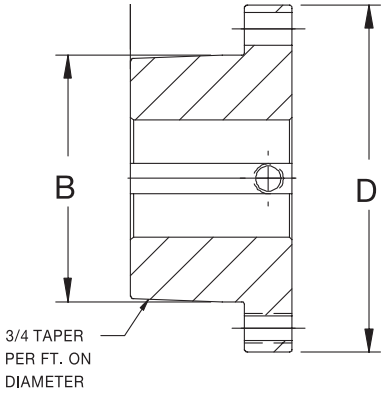

Inch Bore

Bushing	Bores	Keyway	Weight lbs (approx)
JS	2.438	.625 × .313	19
	2.938	.75 × .375	17
	3.438	.875 × .438	15
	3.5		15
	3.938	1 × .125	13
	4.438		10
MS	3.438	.875 × .438	38
	3.5		37
	3.938	1 × .5	34
	4.438		30
	4.938	1.25 × .25	26
	5.438		21
	5.5		20
NS	3.938	1 × .5	54
	4.438		49
	4.938	1.25 × .625	43
	5.438	1.25 × .25	38
	5.5		37
	5.938	1.5 × .25	31
	6		30
PS	4.938	1.25 × .625	76
	5.438		70
	5.938	1.5 × .75	62
	6	1.5 × .25	62
	6.438		55
	6.5		54
	6.938	1.75 × .125	47
	7		45
WS	5.438	1.25 × .625	154
	515/16	1.5 × .75	145
	6		144
	6.438		136
	6.5		135
	6.938	1.75 × .75	126
	7		125
	7.5		114
	7.938	2 × .25	106
	8		105
	8.438		94
	8.5		93

Martin QD Short Bushings are suitable for use in belt conveyor applications wherever the short hubs of a conveyor pulley require the QD Short Bushing style.

Millimeter Bore

Bushing	Dimensions (Inches)						Cap Screws Required	Set Screw Size
	A	B	D	E	L	Bolt Circle		
JS	1	5.148	7.25	2.38	3.38	6.25	.625 × 2.5 (3)	.625
MS	1.19	6.5	9	3.62	4.81	7.88	.75 × 3 (4)	.75
NS	1.5	70	10	4.5	6	8.5	.875 × 3.5 (4)	.75
PS	1.5	8.25	11.75	5	6.5	10	1 × 4 (4)	.875
WS	1.75	10.437	15	5.5	7.25	12.75	1.125 × 5 (4)	1

QD and QD Short Weld-On Hubs

QD Weld-On Hubs

Martin QD Weld-On Hubs are suitable for use in many applications, such as welding to plate steel sprockets.

QD Weld-On Hubs are made of steel, drilled, tapped and taper bored for QD bushings

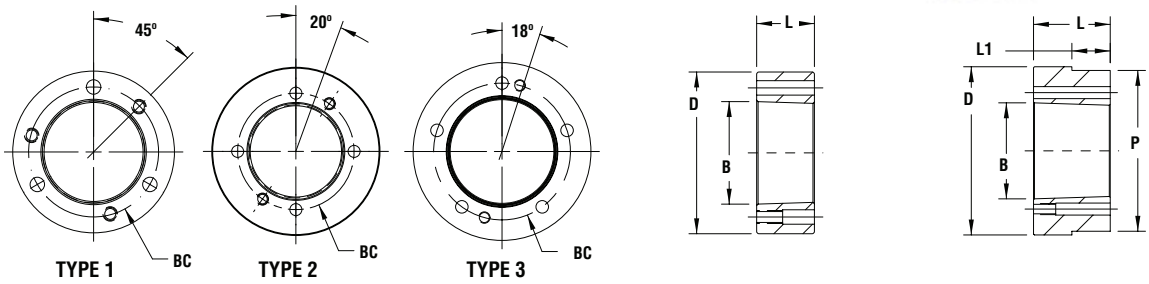

Catalog Number	Dimensions (Inches)						Type Drilling	Weight (lbs)	Mounting
	D ★	L	B (nom)	P	L_1	BC			
JA-A	2.25	.563	1.37	—	—	1-21/32	1	0.4	STD or Reverse Mount
SH-A	3	.813	1.87	—	—	2.25	1	1.0	
SDS-A	3.5	.75	2.18	—	—	2.688	1	1.2	
SK-A	4.375	1.25	2.81	—	—	3.313	1	3.0	
SF-A	5	1.25	3.12	—	—	3.875	1	4.0	
E-A	6.25	1.625	3.83	—	—	5	1	9.0	
F-A	7	2.5	4.44	—	—	5.625	1	16.0	
J-A	7.75	3.188	5.14	—	—	6.25	1	22.5	
M-A	9.5	5.188	6.49	9.25	3.563	7.875	2	50.0	STD Mount Only
N-A	10.5	6.25	6.99	10.25	4.5	8.5	2	75.0	
P-A	13	7.25	8.24	—	—	10	2	155.0	
W-A	15.5	9	10.43	—	—	12.75	2	300.0	
S-A	19.5	12	12.12	18.75	7.5	15	3	558.0	

★ Tolerance of D Dimension (or P dimension where applicable) JA-A Thru J-A = (+-.002) M-A Thru S-A = (+-.003)

QD Short Weld-On Hubs

Martin QD Short Weld-On Hubs are designed for use in conveyor pulleys.

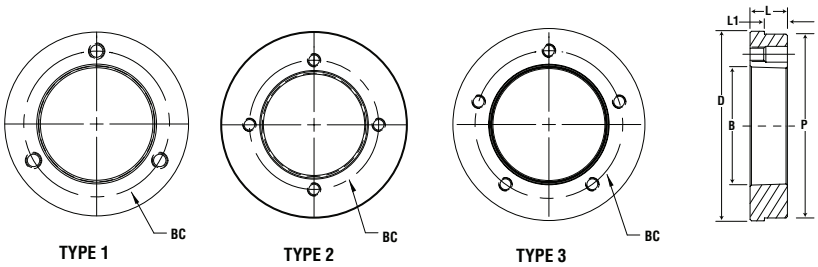

Catalog Number	Dimensions (Inches)						Type Drilling	Weight (lbs)	Mounting
	D	L	B (nom)	P ★	L_1	BC			
SFS-A	5	1	3.12	4.75	.563	3.875	1	3.0	Reverse Mount Only
ES-A	6.25	1.125	3.83	6	.625	5	1	5.5	
FS-A	7	1.25	4.44	6.75	.688	5.625	1	7.4	
JS-A	8.25	1.625	5.14	8	1	6.25	1	13.8	
MS-A	9.5	2.375	6.49	9.25	1.625	7.875	2	22.9	
NS-A	10.25	2.375	6.99	10	1.563	8.5	2	26.8	
PS-A	12.25	2.875	8.24	12	2	10	2	47.9	
WS-A	15.25	3.375	10.43	14.875	2.438	12.75	2	84.2	
SS-A	17.5	3.875	12.12	17	2.75	15	3	121.8	

★ Tolerance of P Dimension SFS-A Thru MS-A = (+-.004) NS-A Thru PS-A = (+-.005) WS-A Thru SS-A = (+-.006)

Taper Bushing Installation

IMPORTANT NOTE: Please follow the instructions on this sheet in order for the Martin bushing to perform satisfactorily.

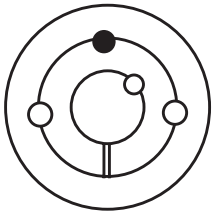

1008 to 3030

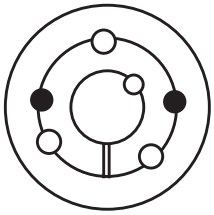

3535 to 6050

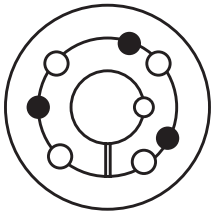

7060 to 10085

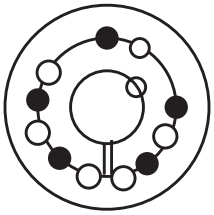

102100

INSTALLATION

1. Clean all oil, dirt, and paint from shaft, bushing bore, outside of bushing and component (sprocket, sheave...etc.) bore.
2. Insert bushing into component. Match the hole pattern, not the threaded holes (each hole will be threaded on one side only.)
3. Thread set or cap screws into those half threaded holes indicated by ❍ on above diagram. Mount assembly on shaft.
4. Alternately torque set or cap screws* to recommended torque setting in chart below.
5. On 3535 and larger bushings use a block, sleeve or drift and hammer large end of bushing (do not hammer bushing directly).
6. Repeat steps 4 and 5 until torque wrench reading, after hammering, is the same as before hammering.
7. Fill all unoccupied holes with grease.

REMOVAL

1. Remove all set or cap screws.
2. Insert set or cap screws in holes indicated by ● on drawing. Loosen bushing by alternately tightening set or cap screws.
3. To reinstall, complete all seven (7) installation instructions.

RECOMMENDED TORQUE		
Bushing No.	**Set Screw**	**Wrench Torque in/lb**
1008, 1108 1210, 1215, 1310 1610, 1615	1/4 – 20 Socket Set Screw	55
	5/16 – 18 Socket Set Screw	165
	3/8 – 16 Socket Set Screw	175
	3/8 – 16 Socket Set Screw	175
2012 2317, 2525 3020, 3030	7/16 – 14 Socket Set Screw	280
	1/2 – 13 Socket Set Screw	430
	5/8 – 11 Socket Set Screw	800
3535 4040 4545	1/2 – 13 Socket Set Screw	1000
	5/8 – 11 Socket Set Screw	1700
	3/4 – 10 Socket Set Screw	2450
5050 6050, 7060, 8065 10085, 120100	7/8 – 9 Socket Set Screw	3100
	1-1/4 – 7 Socket Set Screw	7820
	1-1/2 – 6 Socket Set Screw	13700

If two bushings are used on same component and shaft, fully tighten one bushing before working on the other

CAUTION

WARNING: USE OF ANTI-SEIZE LUBRICANT ON TAPERED CONE SURFACE OR ON BOLT THREADS WHEN MOUNTING MAY RESULT IN DAMAGE TO SHEAVE AND SPROCKETS. THIS VOIDS ALL MANUFACTURER'S WARRANTIES

WARNING: Because of the possible danger to person(s) or property from accidents which may result from the improper use of products, it is important that correct procedures be followed: Products must be used in accordance with the engineering information specified in the catalog. Proper installation, maintenance and operation procedures must be observed. The instructions given above must be followed. Inspections should be made as necessary to assure safe operation under prevailing conditions. All rotating power transmission products when used in a drive are potentially dangerous and must be guarded by the user as required by applicable laws, regulations, standards, and good safety practice. (Refer to ANSI Standard B15.1.)

Taper Bushings Dimensions

No. 1008 to 3030 Taper Bushings

Bushing Number	Bore	Wt. lbs (appr)	Bushing Keyseat	Shaft Keyseat
1008	.5 to .563	.27	.125 × .063	.125 × .063
	.625 to .875	.21	.188 × .094	.188 × .094
	.938 to 1	.16	.25 × .063 ▼	.25 × .125
1108	.5 to .563	.33	.125 × .063	.125 × .063
	.625 to .875	.27	.188 × .094	.188 × .094
	.938 to 1	.22	.25 × .125	.25 × .125
	1.063 to 1.125	.17	.25 × .063 ▼	.25 × .125
1210	.5 to .563	.61	.125 × .063	.125 × .063
	.625 to .875	.55	.188 × .094	.188 × .094
	.938 to 1.25	.49	.25 × .125	.25 × .125
1215	.5 to .563	.8	.125 × .063	.125 × .063
	.625 to .875	.7	.188 × .094	.188 × .094
	.938 to 1.25	.6	.25 × .125	.25 × .125
1310	.5 to .563	.7	.125 × .063	.125 × .063
	.625 to .875	.7	.188 × .094	.188 × .094
	.938 to 1.25	.6	.25 × .125	.25 × .125
	1.313 to 1.375	.6	.313 × .156	.313 × .156
1610	.5 to .563	.9	.125 × .063	.125 × .063
	.625 to .875	.8	.188 .094	.188 .094
	.938 to 1.25	.7	.25 × .125	.25 × .125
	1.313 to 1.375	.7	.313 × .156	.313 × .156
	1.438 to 1.5	.6	.375 × .188	.375 × .188
	1.563 to 1.625	.5	.375 × .125 ▼	.375 × .188
1615	.5 to .563	1.2	.125 × .063	.125 × .063
	.625 to .875	1.1	.188 × .094	.188 × .094
	.938 to 1.25	1.0	.25 × .125	.25 × .125
	1.313 to 1.375	.8	.313 × .156	.313 × .156
	1.438 to 1.5	.7	.375 × .188	.375 × .188
	1.563 to 1.625	.6	.375 × .125 ▼	.375 × .188
2012	.5 to .563	1.7	.125 × .063	.125 × .063
	.625 to .875	1.6	.188 × .094	.188 × .094
	.938 to 1.25	1.5	.25 × .125 ▼	.25 × .125
	1.313 to 1.375	1.4	.313 × .156	.313 × .156
	1.438 to 1.75	1.2	.375 × .188	.375 × .188
	1.813 to 1.875	1.0	.5 × .25	.5 × .25
	1.938 to 2	1.0	.5 × .188 ▼	.5 × .25
2517	.5 to .563	3.5	.125 × .063	.125 × .063
	.625 to .875	3.4	.188 × .094	.188 × .094
	.938 to 1.25	3.3	.25 × .125	.25 × .125
	1.313 to 1.375	3.2	.313 × .156	.313 × .156
	1.438 to 1.75	3.0	.375 × .188	.375 × .188
	1.813 to 2.25	2.4	.5 × .25	.5 × .25
	2.313 to 2.5	1.9	.625 × .188 ▼	.625 × .313
2525	.75 to .875	4.9	.188 × .094	.188 × .094
	.938 to 1.25	4.7	.25 × .125	.25 × .125
	.938 to 1.375	4.5	.313 × .156	.313 × .156
	1.438 to 1.75	4.2	.375 × .188	.375 × .188
	1.813 to 2.25	3.3	.5 × .25	.5 × .25
	2.313 to 2.5	2.5	.625 × .188 ▼	.625 × .313
3020	.938 to 1.25	6.5	.25 × .125	.25 × .125
	1.313 to 1.375	6.3	.313 × .156	.313 × .156
	1.438 to 1.75	6.0	.375 × .188	.375 × .188
	1.813 to 2.25	5.3	.5 × .25	.5 × .25
	2.313 to 2.75	4.5	.625 × .313	.625 × .313
	2.813 to 3	3.9	.75 × .25 ▼	.75 × .375
3030	.938 to 1.25	9.2	.25 × .125	.25 × .125
	1.313 to 1.375	8.9	.313 × .156	.313 × .156
	1.438 to 1.75	8.6	.375 × .188	.375 × .188
	1.813 to 2.25	7.6	.5 × .25	.5 × .25
	2.313 to 2.75	6.2	.625 × .313	.625 × .313
	2.813 to 3	5.0	.75 × .25 ▼	.75 × .375

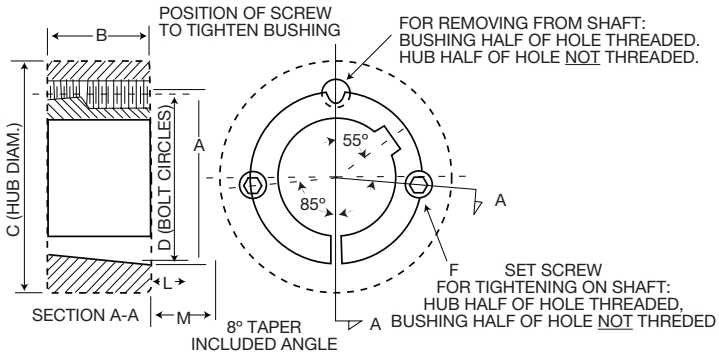

Dimensions

Bushing Number	A	B	C Ø			D	F †	L ★		M ★★	
			Class 20 Gray Iron	Class 30 Gray Iron	Steel			Standard Hex. Key	Short Key ‡	Std. Hex. Key	Short Key ‡
1008	1.386	.875	2.375	2.188	1.938	1.328	.25 × .5	1.125	.625	1.25	.75
1108	1.511	.875	2.5	2.313	2.063	1.453	.25 × .5	1.125	.625	1.25	.75
1210	1.875	1	3.625	3.25	2.875	1.75	.375 × .625	1.375	.813	1.625	1.063
1215	1.875	1.5	3.125	2.875	2.625	1.75	.375 × .625	1.375	.813	1.625	1.063
1310	2	1	3.75	3.375	3	1.875	.375 × .625	1.375	.813	1.625	1.063
1610	2.25	1	4	3.625	3.25	2.125	.375 × .625	1.375	.813	1.625	1.063
1615	2.25	1.5	3.5	3.25	3	2.125	.375 × .625	1.375	.813	1.625	1.063
2012	2.75	1.25	4.75	4.375	3.875	2.625	.438 × .875	1.563	.938	2	1.375
2517	3.375	1.75	5.5	4.875	4.375	3.25	.5 × 1	1.625	1	2.25	1.625
2525	3.375	2.5	4.75	4.5	4.25	3.25	.5 × 1	1.625	1	2.25	1.625
3020	4.25	2	7	6.25	5.625	4	.625 × 1.25	1.813	1.188	2.688	2.063
3030	4.25	3	6.25	5.75	5.375	4	.625 × 1.25	1.813	1.188	2.688	2.063

Bushings cannot be bored larger than largest bore listed.

For detail dimensions required for machining hubs, consult factory.

▼ Key furnished for these sizes only.

Ø For general reference. Severe conditions may require larger hub. Heavy well-located web may permit smaller hub. Hub diameter required depends on the particular application. Consult Martin giving full information on the proposed design. Hub diameters shown are based on 20,000, 30,000, and 50,000 P.S.I. minimum ultimate tensile strength respectively for Class 20 gray iron, Class 30 gray iron, and steel hubs.

† 2 screws required. Use in positions shown for tightening bushing on shaft. In removing bushing from shaft, remove screws and use one of them in the other hole. Bushing price includes screws.

★ Space required to tighten bushing. Also space required to loosen screws to permit removal of hub by puller.

★★ Space required to loosen bushing using one screw as jackscrew — no puller required.

‡ Standard hex key cut to minimum usable length.

Taper Bushings Dimensions

No. 3535 to 5050 Bushings

Bushing Number	Bore	Weight	Bushing Keyseat	Shaft Keyseat	A	B	C Ø			D	F †	G	R
							Class 20 Gray Iron	Class 30 Gray Iron	Steel				
3535	1.188 to 1.25	14	.25 × .125	.25 × .125	5	3.5	7.75	7	6.5	4.83	.5 × 1.5	39°	▲
	1.313 to 1.375	14	.313 × .156	.313 × .156									
	1.438 to 1.75	13	.375 × .188	.375 × .188									
	1.813 to 2.25	12	.5 × .25	.5 × .25									
	2.313 to 2.75	11	.625 × .313	.625 × .313									
	2.813 to 3.25	9	.75 × .375	.75 × .375									
	3.313 to 3.5	8	▼ .875 × .25	.875 × .438									
4040	1.438 to 1.75	22	.375 × .188	.375 × .188	5.75	4	9.5	8.5	7.75	5.54	.625 × 1.75	40°	▲
	1.813 to 2.25	21	.5 × .25	.5 × .25									
	2.313 to 2.75	19	.625 × .313	.625 × .313									
	2.813 to 3.25	17	.75 × .375	.75 × .375									
	3.313 to 3.625	15	.875 × .438	.875 × .438									
	3.688 to 3.75	14	.875 × .438	.875 × .438									
	3.813 to 4	13	▼ 1 × .25	1 × .5									
4545	1.938 to 2.25	30	.5 × .25	.5 × .25	6.375	4.5	10.5	9.5	8.75	6.13	.75 × 2	40°	▲
	2.313 to 2.75	28	.625 × .313	.625 × .313									
	2.813 to 3.25	26	.75 × .375	.75 × .375									
	3.313 to 3.75	23	.875 × .438	.875 × .438									
	3.813 to 4.25	20	1 × .5	1 × .5									
	4.313 to 4.5	18	▼ 1 × .25	1 × .5									
5050	2.313 to 2.75	38	.625 × .313	.625 × .313	7	5	11.5	10.5	9.5	6.72	.875 × 2.25	37°	▲
	2.813 to 3.25	35	.75 × .375	.75 × .375									
	3.313 to 3.75	32	.875 × .438	.875 × .438									
	3.813 to 4.5	27	1 × .5	1 × .5									
	4.563 to 5	24	▼ 1.25 × .438	1.25 × .625									

No. 4030 to 5040 Short Taper Bushings

Bushing Number	Bore	Weight	Bushing Keyseat	Shaft Keyseat	A	B	C Ø			D	F †	G	R
							Class 20 Gray Iron	Class 30 Gray Iron	Steel				
4030	1.438 to 1.75	24	.375 × .188	.375 × .188	5.75	3	9.5	8.5	7.75	5.54	.625 × 1.75	39°	▲
	1.813 to 2.25	21	.5 × .25	.5 × .25									
	2.313 to 2.75	20	.625 × .313	.625 × .313									
	2.813 to 3.25	18	.75 × .375	.75 × .375									
	3.313 to 3.688	15	.875 × .438	.875 × .25									
	3.75	13	▼ .875 × .25	.875 × .438									
	3.813	13	1 × .5	1 × .5									
	3.875 to 4.438	13	1 × .25	1 × .5									
4535	1.938 to 2.25	31	.5 × .25	.5 × .25	6.375	3.5	10.5	9.5	8.75	6.13	.75 × 2	40°	▲
	2.313 to 2.75	29	.625 × .313	.625 × .313									
	2.813 to 3.25	25	.75 × .375	.75 × .375									
	3.313 to 3.688	23	.875 × .438	.875 × .438									
	3.813 to 4.25	20	1 × .5	1 × .5									
	4.375 to 4.5	17	▼ 1 × .25	1 × .5									
	4.75 to 4.938	15	▼ 1.25 × .25	1.25 × .625									
5040	2.438 to 2.75	40	.625 × .313	.625 × .313	7	4	11.5	10.5	9.5	6.72	.875 × 2.25	37°	▲
	2.813 to 3.25	37	.75 × .375	.75 × .375									
	3.313 to 3.75	33	.875 × .438	.875 × .438									
	3.813 to 4.5	29	1 × .5	1 × .5									
	4.75 to 5	23	▼ 1.25 × .25	1.25 × .625									

Bushings cannot be bored larger than largest bore listed.

For detail dimensions required for machining hubs, consult factory.

▼ Key furnished for these sizes only.

Ø For general reference. Severe conditions may require larger hub. Heavy well located web may permit smaller hub. Hub diameter required depends on the particular application. Consult factory giving full information on the proposed design. Hub diameters shown are based on 20,000, 30,000, and 50,000 P.S.I. minimum ultimate tensile strength respectively for Class 20 gray iron, Class 30 gray iron, and steel hubs.

† 3 screws required. Use in positions shown for tightening bushing on shaft. In removing bushing from shaft, remove screws and use two of them in the other two holes. Bushing price includes screws. See following footnote.

▲ Provide sufficient space to tighten and loosen bushing. Width across flats of screw head is same as screw diameter which is shown in column F.

Taper Bushings Dimensions

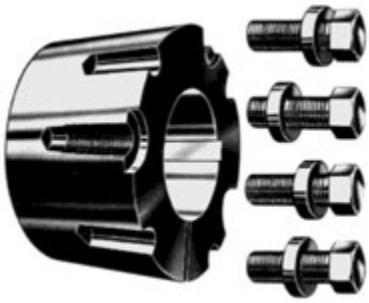

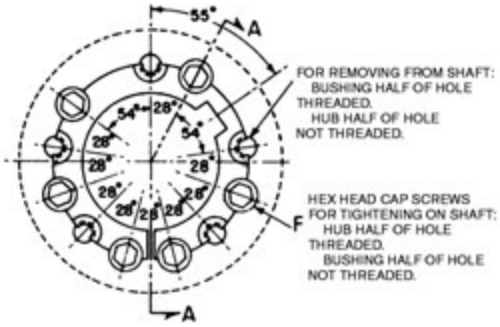

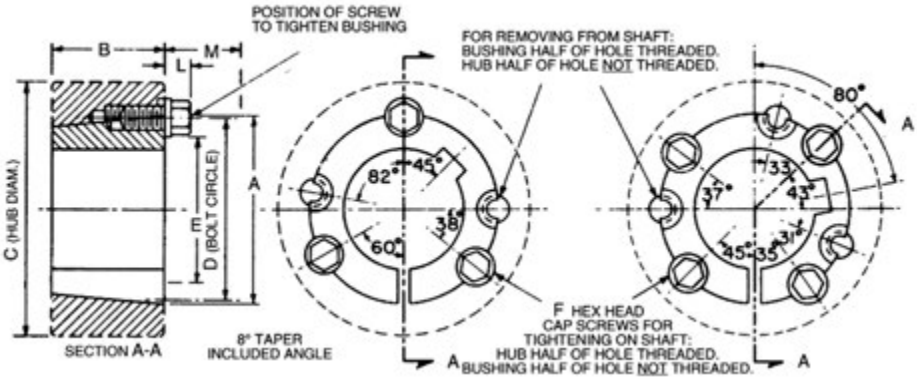

No 6050 to 120100 Taper Bushings

Bushing Number	Bore	Weight	Bushing Keyseat	Shaft Keyseat	A	B	C Ø			D	E	F †	L ★	M ★★
							Class 20 Gray Iron	Class 30 Gray Iron	Steel					
6050	3.813 to 4.5	60	1 × .5	1 × .5	9.25	5	17	15.5	13.5	9	6.75	1.25 × 3.5	1.625	4.375
	49/16 to 5.5	55	1.25 × .625	1.25 × .625										
	5.563 to 6	50	1.5 × .75	1.5 × .75										
7060	4.563 to 5.5	85	1.25 × .625	1.25 × .625	10.25	6	18.5	17	14.75	10	7.75	1.25 × 3.5	1.625	4.375
	5.563 to 6.5	75	1.5 × .75	1.5 × .75										
	6.563 to 7	65	1.75 × .75	1.75 × .75										
◊ 8065	5.063 to 5.5	120	1.25 × .625	1.25 × .625	11.25	6.5	19	17.5	15.5	11	8.75	1.25 × 3.5	1.625	4.375
	5.563 to 6.5	105	1.5 × .75	1.5 × .75										
	6.563 to 7.5	90	1.75 × .75	1.75 × .75										
	7.563 to 8	75	2 × .75	2 × .75										
◊ 10085	6.563 to 7.5	260	1.75 × .75	1.75 × .75	14.75	8.5	23.5	22	19.5	14.5	11.75	1.5 × 4.25	2	5.375
	7.563 to 9	230	2 × .75	2 × .75										
	9.063 to 10	190	2.5 × .875	2.5 × .875										
◊ 120100	7.563 to 9	410	2 × .75	2 × .75	17.25	10	28	26	23	17	14.25	1.5 × 4.25	2	5.375
	9.063 to 11	360	2.5 × .875	2.5 × .875										
	11.063 to 12	290	3 × 1	3 × 1										

Bushings cannot be bored larger than largest bore listed.

For detail dimensions required for machining hubs, consult Martin.

Ø For general reference. Severe conditions may require larger hub. Heavy well located web may permit smaller hub. Hub diameter required depends on the particular application. Consult Martin giving full information on the proposed design. Hub diameters shown are based on 20,000, 30,000, and 50,000 P.S.I. minimum ultimate tensile strength respectively for Class 20 gray iron, Class 30 gray iron, and steel hubs.

† 3 screws for 6050; four for 7060 to 10085; six for 120100. Use in positions shown for tightening bushing on shaft. In loosening bushing, remove screws and use all except one in the other holes. Bushing price includes screws.

★ Space required to tighten bushing. Also space required to loosen screws to permit removal of hub by puller.

★★ Space required to loosen bushing using screws as jackscrews— no puller required.

◊ Not currently stocked — Available on order.

Taper Bushed Type S-Type W Weld-On Hubs Dimensions

Type S

Martin Taper Bushed Type S Weld-On Hubs are suitable for use in many applications such as for welding to plate steel sprockets. The outside diameters of these hubs have been reduced to a minimum. This is permissible because of the reinforcing strength of the items to which they are to be welded. Cases where the attached item is of small dimensions should be referred to Martin.

Type S Weld-On Hubs are made of steel, drilled, tapped, and taper bored for Tapered Bushings. Their small size and the convenience and advantages of Taper Bushed construction make them of great value on many devices for use on shafts.

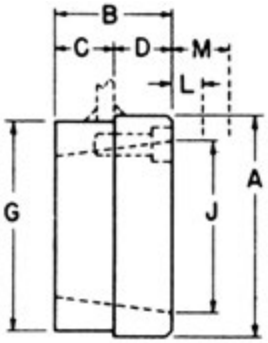

Bushing Number	For Use with Bushing Number	Max. Bore of Bushing	Weight	A	B ◊	C ★★	D ▼	G	J
S16-4	1610	1.625	.9	3	1	.275	.725	2.875 †	2.25
S16-6	1610	1.625	.9	3	1	.450	.550	2.875 †	2.25
S20-6	2012	2	1.8	3.563	1.25	.450	.800	3.438 †	2.75
S20-8	2012	2	1.4	3.563	1.25	.570	.680	3.438 †	2.75
S25-6	2517	2.5	2.6	4.25	1.75	.450	1.300	4.125 †	3.375
S25-8	2517	2.5	2.6	4.25	1.75	.565	1.185	4.125 †	3.375
S25-10	2517	2.5	2.5	4.25	1.75	.685	1.065	4.125 †	3.375
S25-16	2517	2.5	2.4	4.25	1.75	1.090	.660	4.125 †	3.375
S30-10	3020	3	4.3	5.25	2	.675	1.325	5.125 †	4.25
S30-16	3020	3	4.2	5.25	2	1.090	.910	5.125 †	4.25
S35	3535	3.5	12.8	6.5	3.5	1.160	2.340	6.375 Ø	5

See dimension tables on preceding page for bushing data and wrench space required.

† + .000 - .002
◊ + .005 - .010
Ø + .001 - .003
▼ + .000 - .005
★★ + .010 - .010

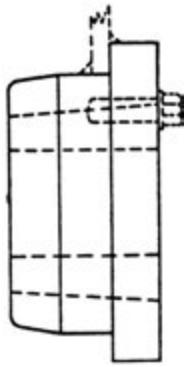

Type WA

Type WA Weld-On Hubs are made of steel, drilled, tapped, and taper bored to receive Tapered Bushings. They are very useful for welding into fan rotors, pulleys, plate sprockets, impellers, agitators, and many other devices which must be firmly fastened to the shaft.

Bushing Number	For Use with Bushing Number	Max. Bore of Bushing	Weight	A	B	C	D	F	G	H	J	K
WA12	1215	1.25	1.3	2.875	1.5	.375	.625	.375	2.5 †	2.375	1.875	2.625
WA16	1615	1.625	1.5	3.25	1.5	.375	.625	.375	2.875 †	2.75	2.25	3
WA25	2517	2.5	4.0	4.875	1.75	.5	.75	.375	4.375 †	4.25	3.375	4.625
WA30	3030	3	8.6	5.5	3	.75	.75	.25	5.125 †	4.813	4.125	5
WA35	3535	3.5	15	6.75	3.5	1.25	1	.375	6.25 †	5.938	5	6
WA40	4040	4	29	7.75	4	1.5	1	.375	7.25 †	6.875	5.75	7
WA45	4545	4.5	42	8.75	4.5	1.75	1	.375	8 †	7.625	6.375	8
WA50	5050	5	57	9.5	5	1.75	1	.375	8.75 •	8.375	7	8.75
WA60	6050	6	115	13.25	5	1.75	1.25	–	12.25 ★	11.875	9.25	–
WA70	7060	7	155	14.5	6	2.25	1.25	–	13.5 ★	13.25	10.25	–
WA80	8065	8	180	15.25	6.5	2.25	1.25	–	14.25 ★	14	11.25	–
WA100	10085	10	340	19.75	8.5	3.5	1.5	–	18.75 ★	18.25	14.75	–

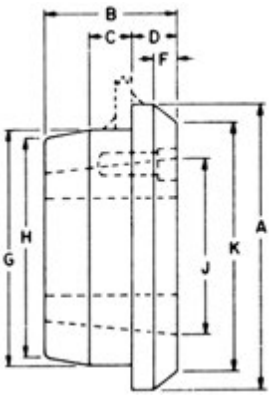

See dimension tables on preceeding page for bushing data and wrench space required.

† + .000 - .002
• + .000 - .003
★ + .000 - .004

Taper Bushings
Metric and Reborable

Stock Taper Bushings With Metric Bores and Keyways

★ Metric Bores	★ Metric Keyway	Taper Bushing Number			
14, 16	5 × 2.3	1008	1108	1210	
		1215	1610	1615	
18, 19	6 × 2.8	1008	1108	1210	1215
20, 22		1610	1615	2012	2517
24	8 × 3.3	1108	1210	1215	
		1610	1615	2012	2517
25	8 × 3.3	1210	1215	1610	
		1615	2012	2517	
28, 30	8 × 3.3	1210	1215	1610	
		1615	2012	2517	3020
32	10 × 3.3	1610	1615		
		2012	2517	3020	
35	10 × 3.3	1610	1615		
		2012	2517	3020	
38	10 × 3.3	1610	1615		
		2012	2517	3020	
40, 42	12 × 3.3	2012			
		2517	3020		
45, 48	14 × 3.8	2012			
		2517	3020		
50	14 × 3.8	2517	3020		
55	16 × 4.3	2517	3020		

★ Millimeter Bores and Keyways from ISO Std. R773. 1" = 25.4 millimeters

NOTE: For other metric bore sizes consult factory.

Stock Reborable Taper Bushings With No Keyways

Sintered Steel		Gray Iron		Steel		Stainless Steel	
1008	.563			1008	.5	1008	.5
1108	.5			1108	.5	1108	
1210	.563			1210	.5	1210	.5
1215	.5			1215	.5	1215	
1310	.5			1310		1310	
1610	.5 1.313			1610	.5	1610	.5
1615	.5 1.313			1615	.5	1615	
2012	.5			2012	.5	2012	.5
2517	.5 1.563			2517	.5	2517	.5
		2525	2.125	2525		2525	
3020	.938 1.688	3020	.938 1.438 2.938	3020	.938	3020	.938
		3030	.938 2.438 2.938	3030		3030	
		3535	1.188 2.438 2.938	3535		3535	
		4040	1.438 3.438 3.938	4040		4040	
		4545	3.938 4.438	4545		4545	
		5050	2.438 3.938				
		6050	3.438 5.438				
		7060	3.938				
		8065	4.438				
		10085	7				
		H120100	8				

★ Not currently stocked. Consult factory for availability and pricing.

MST® BUSHINGS INSTRUCTIONS

The MST® bushings are easy to install and remove. They are split through the barrel and have a taper to provide a true clamp on the shaft. They are keyed to both the shaft and the hub to help during “blind” installations.

INSTALLATION

1. Be sure the tapered cone surfaces of the bushing and the inside of the driven product are clean and free of anti-seize lubricants.
2. Place bushing in sprocket or other Martin MST® part.
3. Place cap screws loosely in pull-up holes. Bushing remains loose to assure sliding fit on shaft
4. With key on shaft, slide sprocket to desired position on shaft. Be sure heads of cap screws are accessible.
5. Align sprocket. Tighten screws alternately and progressively - until they are pulled up tight (see table below). Do not use extensions on wrench handles. Do not allow sprocket to be drawn in contact with flange of bushing. There should be a gap between bushing flange and sprocket. **CAUTION: THIS GAP MUST NOT BE CLOSED**

REMOVAL

1. Loosen and remove cap screws.
2. Insert cap screws in tapped removal holes.
3. Tighten inserted screws until sprocket is loose on shaft.
4. Remove sprocket from shaft.

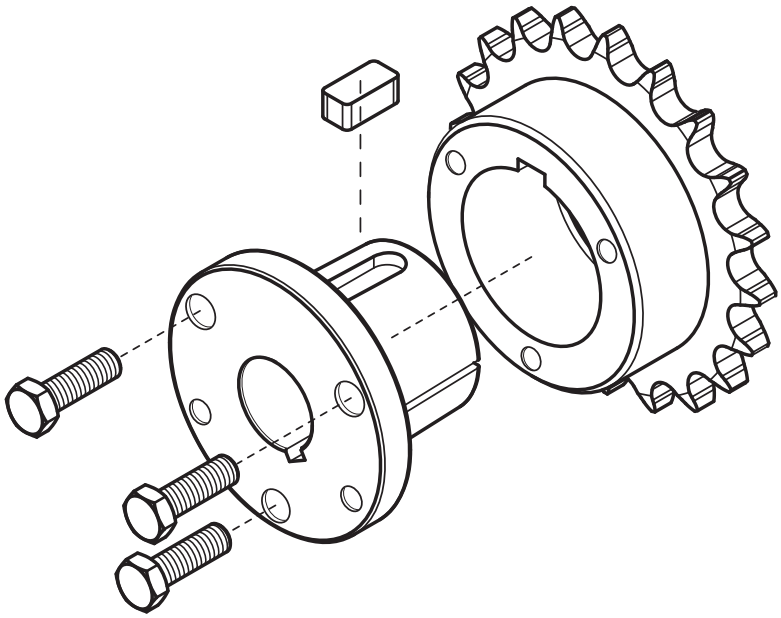

WRENCH TORQUE VALUE FOR TIGHTENING BUSHING		
MST® Bushing Size	Size of Cap Screw	Wrench Torque in/lb
G	.25 × .625	95
H	.25 × .75	95
P	.313 × 1	192
Q	.375 × 1.25	348
R	.375 × 1.75	348
S	.5 × 2.25	840
U	.625 × 2.75	1680
W	.75 × 3	3000

CAUTION

WARNING: USE OF ANTI-SEIZE LUBRICANT ON TAPERED CONE SURFACE OR ON BOLT THREADS WHEN MOUNTING MAY RESULT IN DAMAGE TO SHEAVE AND SPROCKETS. THIS VOIDS ALL MANUFACTURER’S WARRANTIES

WARNING: Because of the possible danger to person(s) or property from accidents which may result from the improper use of products, it is important that correct procedures be followed: Products must be used in accordance with the engineering information specified in the catalog. Proper installation, maintenance and operation procedures must be observed. The instructions given above must be followed. Inspections should be made as necessary to assure safe operation under prevailing conditions. All rotating power transmission products when used in a drive are potentially dangerous and must be guarded by the user as required by applicable laws, regulations, standards, and good safety practice. (Refer to ANSI Standard B15.1.)

MST® Bushings

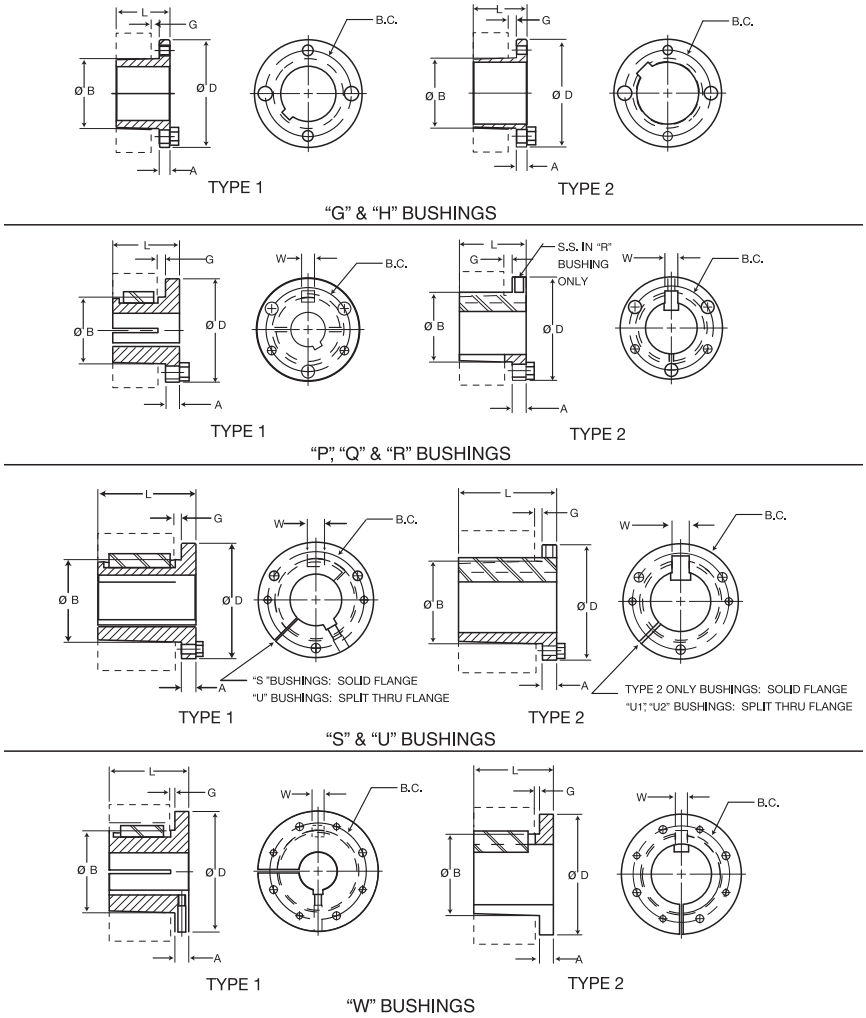

Bushing Specifications

Part Number	Dimensions							Stock Bore Range		Cap Screws		Av. Wt. Lbs.	Wrench Torque In./lbs.
	D	L	A	B Large End	G	B.C.	W	Type 1	Type 2	No.	Size		
G	2	1.00	.25	1.172	.19	1.56	—	.375 – .938	1	2	.25 × .625	.5	95
H	2.5	1.25	.25	1.625	.19	2	—	.375 – 1.375	1.438 – 1.5	2	.25 × .75	.8	95
P1	3	1.94	.41	1.938	.22	2.44	.375	.5 – 1.438	1.5 – 1.75	3	.313 × 1	1.3	192
P2	3	2.94	.41	1.938	.22	2.44	.375	.75 – 1.438	1.5 – 1.75	3	.313 × 1	1.5	192
P3	3	4.44	.41	1.938	.22	2.44	.375	1.125 – 1.375	1.625	3	.313 × 1	2.0	192
Q1	4.12	2.50	.53	2.875	.22	3.38	.5	.75 – 2.063	2.125 – 2.688	3	.375 × 1.25	3.5	348
Q2	4.12	3.50	.53	2.875	.22	3.38	.5	1 – 2.063	2.125 – 2.625	3	.375 × 1.25	4.5	348
Q3	4.12	5.00	.53	2.875	.22	3.38	.5	1.375 – 2.063	2.125 – 2.5	3	.375 × 1.25	5.5	348
R1	5.38	2.88	.62	4	.25	4.62	.75	1.125 – 2.813	2.875 – 3.75	3	.375 × 1.75	7.5	348
R2	5.38	4.88	.62	4	.25	4.62	.75	1.375 – 2.813	2.875 – 3.625	3	.375 × 1.75	11.0	348
S1	6.38	4.38	.75	4.625	.31	5.38	.75	1.688 – 3.188	3.25 – 4.25	3	.5 × 2.25	13.5	840
S2	6.38	6.75	.75	4.625	.31	5.38	.75	1.875 – 3.188	3.25 – 4.188	3	.5 × 2.25	19.0	840
UO	8.38	5.25	1.06	6	.44	7	1.25	2.375 – 3.063	—	3	.625 × 2.75	30.0	1680
UO	8.38	4.94	.75	6	.44	7	1.25	3.25 – 4.25	4.375 – 5.5	3	.625 × 2.75	27.0	1680
U1	8.38	7.12	1.06	6	.44	7	1.25	2.375 – 4.25	4.375 – 5.5	3	.625 × 2.75	40.0	1680
U2	8.38	10.12	1.06	6	.44	7	1.25	2.438 – 4.25	4.375 – 5	3	.625 × 2.75	50.0	1680
W1	12.5	8.25	1.44	8.5	.44	10	1.25	3.375 – 6.188	6.25 – 7.438	4	.75 × 3	104.0	3000
W2	12.5	11.25	1.44	8.5	.44	10	1.25	3.375 – 6.188	6.25 – 7.438	4	.75 × 3	133.0	3000

All tapers are .75" per 12" on Diameter.

All dimensions are in inches except, as noted.

All bushings are cast iron, ductile iron, sintered steel, or steel. Consult manufacturer for clarification.

Metric bushings also available.

MST® Weld-On Hubs

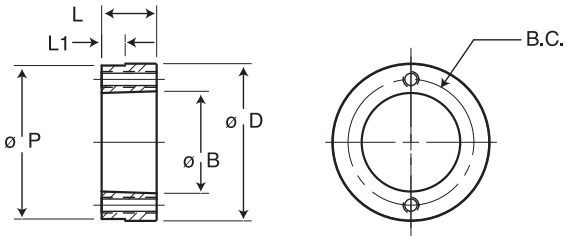

ALL TAPERS .75" PER FT.
ON DIAMETER

"H" HUBS

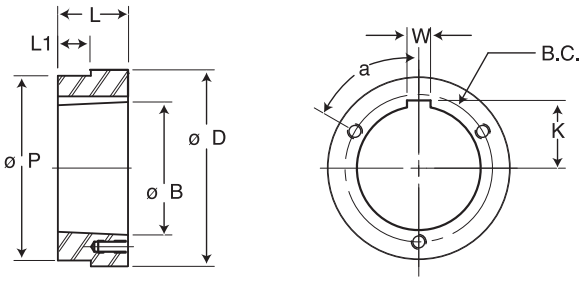

"P", "Q", "R", "S", Y "U" HUBS

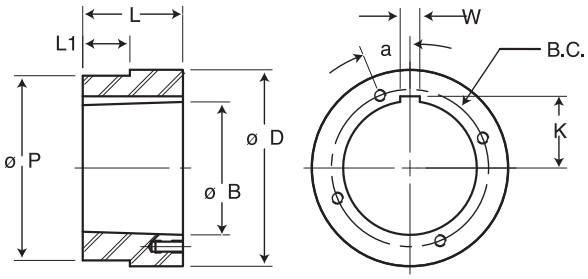

"W" HUBS

Bushing Specifications

Part Number	For Bushing	Dimensions									Tapped Holes		Wt. Lbs.
		D	L	P	L1	B	K	B.C.	W	a⁰	No.	Size	
HH1	H	2.5	.88	2.375	.174	1.621	—	2	—	—	2	.25 – 20	.6
HCH1	H	2.5	.88	2.375	.625	1.621	—	2	—	—	2	.25 – 20	.7
HP1	P1	3.0	1.31	2.875	.292	1.938	1.094	2.438	.375	60	3	.313 – 18	1.4
HCP1	P1	3.0	1.31	2.875	1	1.938	1.094	2.438	.375	60	3	.313 – 18	1.1
HP2	P2	3	2.31	2.875	1.1	1.938	1.094	2.438	.375	60	3	.313 – 18	2.5
HQ1	Q1	4.5	1.75	4.375	.709	2.875	1.562	3.375	.5	60	3	.375 – 16	4.4
HCQ1	Q1	4.5	1.75	4.375	1.25	2.875	1.562	3.375	.5	60	3	.375 – 16	4.4
HQ2	Q2	4.5	2.75	4.375	1.606	2.875	1.562	3.375	.5	60	3	.375 – 16	6.9
HR1	R1	5.75	2.00	5.625	.709	4	2.188	4.625	.75	60	3	.375 – 16	7.3
HR2	R2	5.75	4.00	5.625	1.606	4	2.188	4.625	.75	60	3	.375 – 16	15.4
HS1	S1	6.75	3.31	6.5	.946	4.625	2.562	5.375	.75	60	3	.5 – 13	17.3
HS2	S2	6.75	5.69	6.5	2.963	4.625	2.562	5.375	.75	60	3	.5 – 13	30.4
HU0	U0	8.5	3.75	8.25	2	6	3.25	7	1.25	60	3	.625 – 11	32.0
HU1	U1	8.5	5.62	8.25	2.963	6	3.25	7	1.25	60	3	.625 – 11	44.6
HU2	U2	8.5	8.62	8.25	6.016	6	3.25	7	1.25	60	3	.625 – 11	69.0
HW1	W1	12.5	6.38	12.25	2.963	8.5	4.562	10	1.25	22.5	4	.75 – 10	130.0

All tapers are .75" per 12" on Diameter.

All dimensions are in inches, except as noted.

QD and MST®
Idler Bushings

Martin Idler Bushings are designed to accommodate stock V-belt drives, sprockets, timing belt pulleys, or other products that use QD or MST® type bushings.

They are equipped with two electric motor grade, permanently lubricated ball bearings, mounted on a precision shoulder bolt. Shoulder bolt and two hex jam nuts are zinc plated.

Installation is made by slipping the threaded shaft through a hole bored in support structure, and tightening the locking nut. Sheaves, sprockets, or other products can be removed without dismounting the idler bushing. Available in sizes as shown below. Boxed complete with all mounting hardware and instructions.

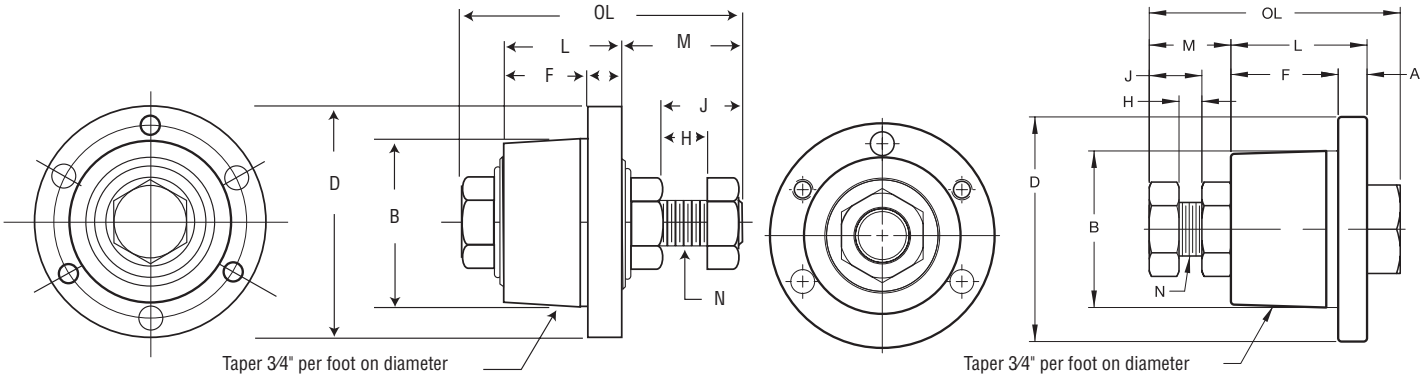

QD Radial Load Ratings (lbs) 2500 Hours Service Life

Part Number	RPM				
	100	500	1000	1200	1800
SH-BB	1260	740	580	540	480
SD-BB	1740	1020	800	760	660
SK-BB	2370	1360	1070	1000	880
SF-BB	2550	1500	1180	1100	980
E-BB	4640	2720	2140	2020	1780

Service Temperature Range –40° F Minimum +248° F Maximum.

MST® Radial Load Ratings (lbs) 2500 Hours Service Life

Part Number	RPM				
	100	500	1000	1200	1800
H-BB 1/2	1411	825	655	616	538
P1-BB 5/8	1752	1024	813	765	668
Q1-BB 3/4	2344	1371	1088	1024	894
Q1-BB 1	2555	1494	1186	1116	975

Service Temperature Range –40° F Minimum +248° F Maximum.

Part Number	Dimensions									
	A	B	D	F	H	J	L	M	N	OL
SH-BB	.438	1.871	2.688	.75	.625	.938	1.313	1.313	.438	3.063
SD-BB	.5	2.187	3.188	1.25	.688	.688	1.813	1.563	.625	3.875
SK-BB	.563	2.812	3.875	1.25	.75	.813	1.938	1.75	.75	4.563
SF-BB	.563	3.125	4.625	1.25	.75	.938	2.063	2.125	.875	5
E-BB	.75	3.834	6	1.625	1.438	2.188	2.625	3.188	1.375	6.875
H-BB 1/2	.25	1.625	2.5	1	.375	1.063	1.25	1	.5	2.563
P1-BB 5/8	.406	1.937	3	1.531	.531	.922	1.938	1.313	.625	3.641
Q1-BB 3/4	.531	2.875	4.125	1.938	.313	.781	2.5	1.25	.75	4.219
Q1-BB 1	.531	2.875	4.125	1.938	.281	.891	2.5	1.5	1	4.609