GEARS

PRODUCT	PAGE
INDEX	**G-1**
STOCK GEARS	**G-2**
MADE-TO-ORDER GEARS	**G-3**
NUMBERING SYSTEM	**G-4**
GEAR STYLES	**G-5**
SPUR GEARS (14½°)	**G-6 – G-24**
3DP	G-6 – G-7
4DP	G-8 – G-9
5DP	G-10 – G-11
6DP	G-12 – G-13
8DP	G-14 – G-15
10DP	G-16 – G-17
12DP	G-18 – G-19
16DP	G-20 – G-21
20DP	G-22 – G-23
24DP	G-24
SPUR GEAR HORSEPOWER RATINGS (14½°)	**G-25 – G-27**
SPUR GEARS (20°)	**G-28 – G-43**
4DP	G-28
5DP	G-29
6DP	G-30
8DP	G-31
10DP	G-32
12DP	G-33
16DP	G-34
20DP	G-35
SPUR GEAR HORSEPOWER RATINGS (20°)	**G-36 – G-43**
RACK	**G-44 – G-45**
BEVEL GEARS	**G-46 – G-49**
BEVEL GEARS HORSEPOWER RATINGS	**G-49**
MITER GEARS	**G-50 – G-56**
MITER GEARS HORSEPOWER RATINGS	**G-56**
WORM GEARS	**G-57 – G-77**
3DP	G-58
4DP	G-59
6DP	G-60 – G-62
8DP	G-63 – G-65
10DP	G-66 – G-68
12DP	G-69 – G-71
16DP	G-72 – G-74
WORM GEAR HORSEPOWER RATINGS	**G-75 – G-77**
GEAR STANDARD TOLERANCES	**G-78**
GEAR ENGINEERING DATA	**G-79 – G-95**
GEAR DRIVE SELECTION	G-80 – G-82
HORSEPOWER FORMULA	G-83
GEAR STANDARD**S**	**G-84**
SPUR FORMULAS	G-85 – G-90
BEVEL AND MITER GEAR FORMULAS	G-91
WORM GEAR FORMULAS	G-92
SPUR GEAR TOOTH PROFILE (14½°)	**G-93 – G-95**
SPUR GEAR MATERIALS	**G-96**

Stock Gears

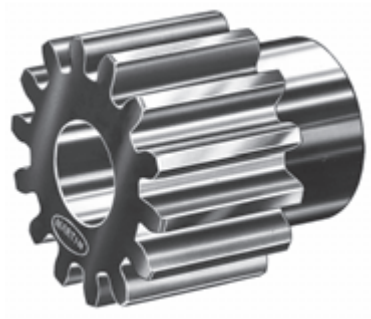

Spur Gears

Bevel Gears

Miter Gears

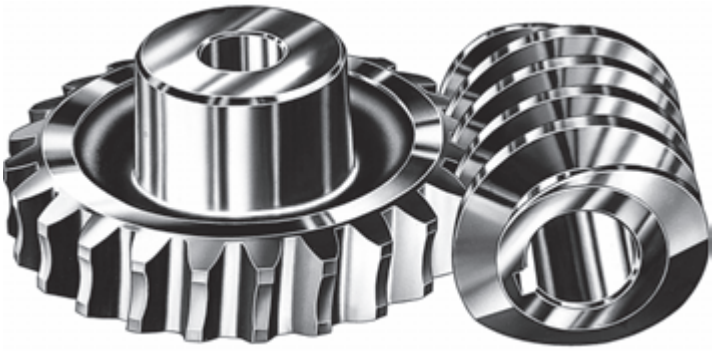

Worm and Worm Gears

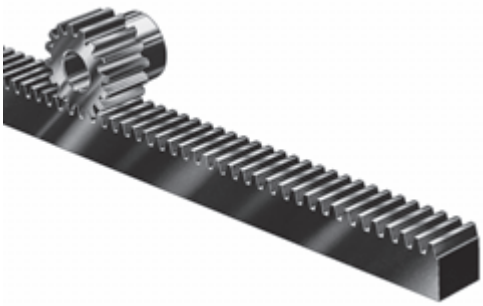

Gear Rack

Made-To-Order Gears

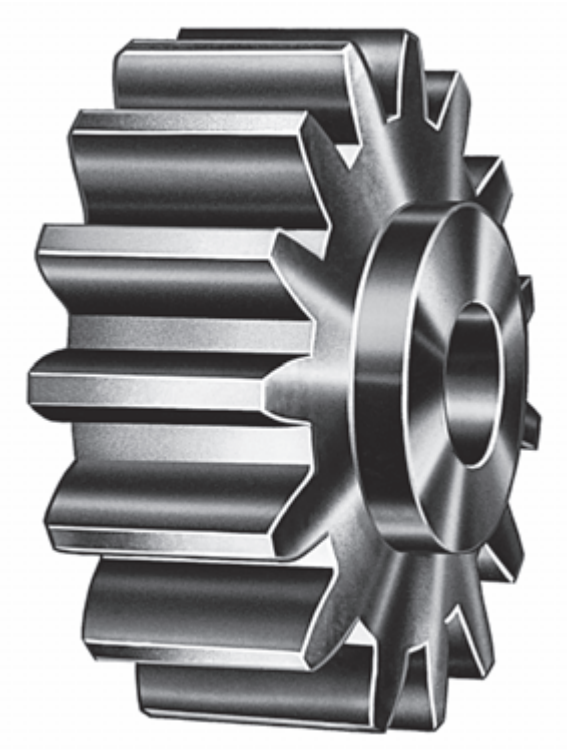

Stock Gears Numbering System

Letters (Prefix) Indicate Material and Type Gear.
Letters (Suffix) Indicate Hardened, Number of Threads, Direction of Rotation and KW and SS.
Numbers Indicate Pitch, Number of Teeth, and Ratio (Suffix).

Racks

R	Steel
RA	Steel, Heavy Backing
TR	Steel, 20°, Heavy Backing
R20	Steel, 20°, Wide Face

Examples:

R6X2	14½° STD Backing 6DPX2' Long
RA6X4	14½° Heavy Backing 6DPX4' Long
TR6X6	20° STD Width 6DPX6' Long
R206X6	20° Wide Face 6DPX6' Long

Worm Gear

W	Worm, Cast Iron
WB	Worm, Bronze
D / Q	(Suffix) Double or Quadruple Thread

Worms and Worm Gears come standard as right hand. If left hand is needed, it must be specified.

Examples:

W660	Cast Iron 6DP 60T Right Hand
WB1020	Bronze 10DP 20T Right Hand
W640D	Cast Iron 6DP 40T Double Thread Right Hand

Bevel Gears

B	Bevel Gear, Cast Iron
B	Pinion, Steel
BS	Bevel Gear, Steel
BS	Pinion, Steel

Examples:

B1060-3	Cast Iron 10DP 60T 3:1 Ratio
B1020-3	Steel 10DP 20T 3:1 Ratio
BS1040-2	Steel 10DP 40T 2:1 Ratio
BS1020-2	Steel 10DP 20T 2:1 Ratio

Spur Gears

S	Steel
TS	Steel, 20°
C	Cast Iron
TC	Cast Iron, 20°
H	Hardened Teeth
NM	Non-Metallic

Examples:

S620	Steel 6DP 20T 14½°PA
TS621	Steel 6DP 21T 20°PA
C675	Cast Iron 6DP 75T 14½°PA
S620H	Steel 6DP 20T Hardened 14½°PA
NM620	Non-Metallic 6DP 20T 14½°PA
S612BS 1	Steel 6DP 12T 1" Bore 14½°PA
TS816BS 7/8	Steel 8DP 16T .875 Bore 20°PA

Worm

W	Steel
WH	Steel With Hub Projection
WG	Steel Hardened Ground Threads
WHG	Steel Hardened Ground Threads with Hub Projection
D / Q	(Suffix) Double or Quadruple Thread

Examples:

W6	Steel 6DP Right Hand
WH6	Steel w/Hub Projection 6DP Right Hand
WG6	Steel Case Hardened Ground Threads 6DP Right Hand
WHG6	Steel w/Hub Projection Hardened Ground Threads 6DP Right Hand
W6D	Steel 6DP Double Thread Right Hand

Miter Gears

M	Miter Gear, Steel
A / B	Larger Bore (Suffix)
HM	Miter, Hardened Teeth
K	KW & SS

Notes:
ALWAYS 1: 1 RATIO.
Same number of teeth on each mating Gear.

Examples:

M824	Steel 8DP 24T
M824A	Steel 8DP 24T Larger Bore
HM1020	Steel Hardened Teeth 10DP 20T
HMK1020	Steel Hardened 10DP 20T with KW & SS

Styles of Spur Gears

Martin Stock Spur Gears are available in five different styles. Steel Gears are furnished in plain style and plain style with hub. Cast gears are furnished, plain with hub, web with lightening holes, and spoke. Cast gears are machined on all operating surfaces. Martin cast gears are cast with larger hub to provide extra strength and to allow for larger bores.

Type A
- Plain Without Hubs
- All Steel

Type B_1
- Web
- All Steel
- Cast

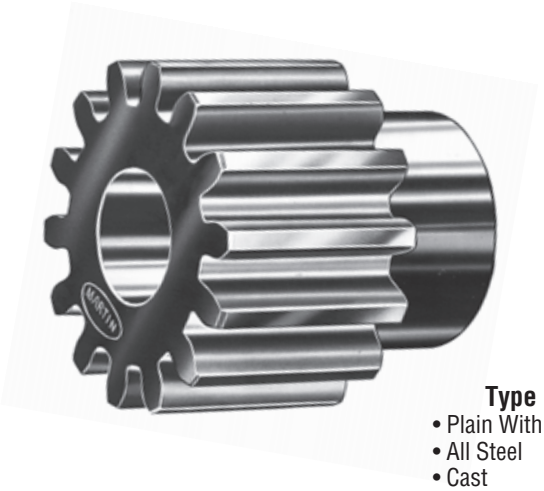

Type B
- Plain With Hubs
- All Steel
- Cast

Type B_2
- Web With Lighten Holes
- All Steel
- Cast

Type B_3
- Spoke Style
- Cast

3 DP
3" Face

Steel Stock Spur Gears
14½°Pressure Angle

Type A
Plain Without Hub

Type B
Plain With Hub

Type B_1
Web

Type B_2
Web With
Lighten Holes

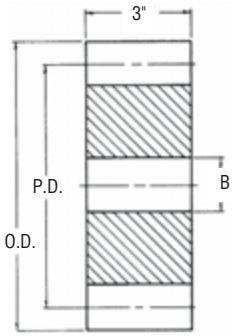

Type A

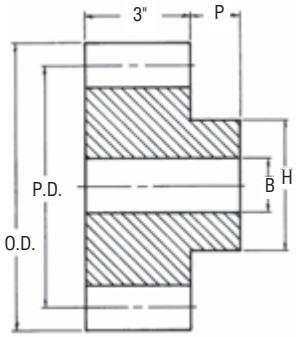

Type B

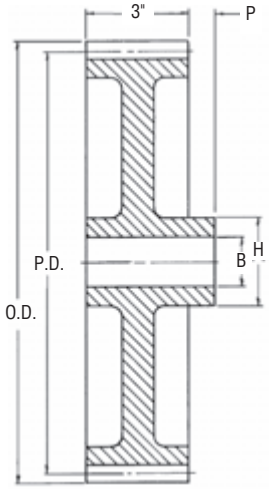

Type B_1, B_2

Steel

No. Teeth	Catalog Number	Pressure Angle (Deg.)	Diameter		Type	Bore (Inches)		Hub (Inches		Weight Lbs.
			Pitch	Outside		Stock	Max.*	Diameter	Proj.	(App.)
11	S311	14.5	4 • ◊	4.666	A	1.3125	20	–	–	12.0
12	S312	14.5	4 •	4.666	A	1.3125	20	–	–	11.0
13	S313	14.5	4.333	5	A	1.3125	2.25	–	–	10.7
14	S314	14.5	4.667	5.333	A	1.3125	2.375	–	–	12.8
15	S315	14.5	5	5.666	A	1.3125	2.75	–	–	14.8
16	S316	14.5	5.333	6	A	1.3125	2.8125	–	–	17.0
18	S318	14.5	6	6.666	A	1.3125	3.25	–	–	22.0
20	S320	14.5	6.667	7.333	A	1.4375	3.625	–	–	27.4
21	S321	14.5	7	7.666	A	1.4375	3.875	–	–	30.7
24	S324	14.5	8	8.666	B	1.4375	3.25	5.5	1.25	48.2
30	S330	14.5	10	10.666	B	1.5625	3.875	6.25	1.25	74.5
36	S336	14.5	12	12.666	B	1.5625	4.125	6.5	1.75	114.0
42	S342	14.5	14	14.666	B1	1.5625	4.125	6.5	1.75	106.0
48	S348	14.5	16	16.666	B_1	1.5625	4.125	6.5	1.75	120.0
54	S354	14.5	18	18.666	B_2	1.5625	4.125	6.5	1.75	134.0
60	S360	14.5	20	20.666	B_2	1.5625	4.125	6.5	1.75	150.0
72	S372	14.5	24	24.666	B_2	1.5625	4.5	7	1.75	180.0
84	S384	14.5	28	28.666	B_1	1.5625	4.5	7	1.75	215.0
96	S396	14.5	32	32.666	B_2	1.6875	4.5	7	1.75	264.0
108	S3108	14.5	36	36.666	B_2	1.9375	4.5	7	1.75	305.0
120	S3120	14.5	40	40.666	B_2	1.9375	50	7.5	1.75	367.0

* Recommended Maximum Bore With Keyway and Setscew.
◊ Enlarged Pitch Diameter with Special Tooth Form.
• 4" Face.

14.5° P.A. Gears Will Not Operate With 20° P.A.

Cast Iron Stock Spur Gears

14½°Pressure Angle

3 DP

3" Face

Type B
Plain With Hub

Type B_2
Web With
Lighten Holes

Type B_3
Spoke Style

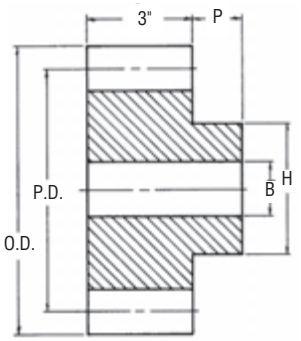

Type B

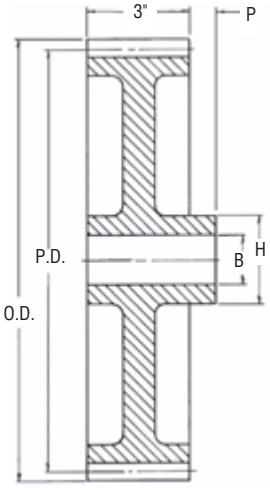

Type B_2, B_3

Cast — Style "B"

No. Teeth	Catalog Number	Pressure Angle (Deg.)	Diameter		Type	Bore (Inches)		Hub (Inches)		Weight Lbs. (App.)
			Pitch	Outside		Stock	Max.*	Diameter	Proj.	
24	C324	14½	8.000	8.666	B	1 7/16	2 11/16	4½	1¼	40.4
28	C328	14½	9.333	10.000	B	1 7/16	3 3/16	5¼	1¼	54.2
30	C330	14½	10.000	10.666	B	1 7/16	3 3/16	5¼	1¼	57.1
32	C332	14½	10.667	11.333	B	1 7/16	3 3/16	5¼	1¼	62.4
36	C336	14½	12.000	12.666	B_2	1 7/16	3¼	5½	1¾	71.3
40	C340	14½	13.333	14.000	B_2	1 7/16	3¼	5½	1¾	75.9
42	C342	14½	14.000	14.666	B_2	1 7/16	3¼	5½	1¾	79.5
45	C345	14½	15.000	15.666	B_2	1 7/16	3¼	5½	1¾	85.0
48	C348	14½	16.000	16.666	B_3	1 9/16	3¼	5½	1¾	92.9
54	C354	14½	18.000	18.666	B_3	1 9/16	3¼	5½	1¾	104.0
60	C360	14½	20.000	20.666	B_3	1 9/16	3¼	5½	1¾	115.0
72	C372	14½	24.000	24.666	B_3	1 9/16	3 11/16	6	1¾	153.0
75	C375	14½	25.000	25.666	B_3	1 9/16	3 11/16	6	1¾	155.0
84	C384	14½	28.000	28.666	B_3	1 11/16	3 11/16	6	1¾	178.0
90	C390	14½	30.000	30.666	B_3	1 11/16	3 11/16	6	1¾	185.0
96	C396	14½	32.000	32.666	B_3	1 11/16	3 11/16	6	1¾	205.0
105	C3105	14½	35.000	35.666	B_3	1 11/16	3 11/16	6	1¾	216.0
108	C3108	14½	36.000	36.666	B_3	1 15/16	3 11/16	6	1¾	228.0
120	C3120	14½	40.000	40.666	B_3	1 15/16	4⅛	6½	1¾	226.0

* Recommended Maximum Bore With Keyway and Setscrew.

14½° P.A. Gears Will Not Operate With 20° P.A.

4 DP
2" Face

Steel Stock Spur Gears
14½°Pressure Angle

Type B
Plain With Hub

Type B_1
Web

Type B_2
Web With
Lighten Holes

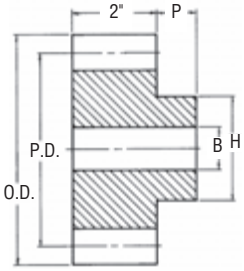

Type B

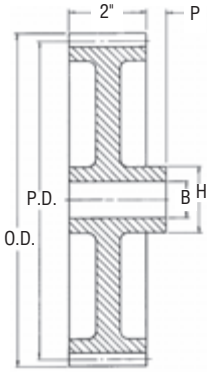

Type B_1, B_2

Steel

No. Teeth	Catalog Number	Pressure Angle (Deg.)	Diameter Pitch	Diameter Outside	Type	Bore (Inches) Stock	Bore (Inches) Max.*	Hub (Inches) Diameter	Hub (Inches) Proj.	Weight Lbs. (App.)
11	S411	14½	3.000†	3.500	B	1⅛	1 5/16	2¼	⅞	4.0
12	S412	14½	3.000	3.500	B	1⅛	1 5/16	2¼	⅞	3.9
13	S413	14½	3.250	3.750	B	1⅛	1 5/16	2¼	⅞	4.6
14	S414	14½	3.500	4.000	B	1⅛	1⅝	2¾	⅞	5.7
15	S415	14½	3.750	4.250	B	1⅛	1¾	3	⅞	6.8
16	S416	14½	4.000	4.500	B	1⅛	1¾	3¼	⅞	8.0
17	S417	14½	4.250	4.750	B	1⅛	2	3½	⅞	9.2
18	S418	14½	4.500	5.000	B	1⅛	2¼	3¾	⅞	10.4
19	S419	14½	4.750	5.250	B	1⅛	2¼	4	⅞	10.5
20	S420	14½	5.000	5.500	B	1⅛	2⅜	4¼	⅞	13.4
21	S421	14½	5.250	5.750	B	1⅛	2⅝	4½	⅞	14.9
22	S422	14½	5.500	6.000	B	1⅛	2¾	4¾	⅞	16.5
24	S424	14½	6.000	6.500	B	1⅛	2¾	4¾	1½	22.8
26	S426	14½	6.500	7.000	B	1⅛	2¾	4¾	1½	24.8
28	S428	14½	7.000	7.500	B	1⅛	2¾	4¾	1½	27.8
30	S430	14½	7.500	8.000	B	1¼	2¾	4¾	1½	31.0
32	S432	14½	8.000	8.500	B	1¼	2¾	4¾	1½	34.4
36	S436	14½	9.000	9.500	B	1¼	2¾	4¾	1½	41.7
40	S440	14½	10.000	10.500	B	1¼	3⅛	5⅛	1½	51.8
42	S442	14½	10.500	11.000	B	1¼	3⅛	5⅛	1½	56.0
44	S444	14½	11.000	11.500	B	1¼	3⅛	5⅛	1½	60.8
48	S448	14½	12.000	12.500	B	1¼	3⅛	5⅛	1½	70.8
54	S454	14½	13.500	14.000	B_1	1¼	3	5	1½	57.4
56	S456	14½	14.000	14.500	B_1	1¼	3	5	1½	59.9
60	S460	14½	15.000	15.500	B_2	1¼	3	5	1½	62.8
64	S464	14½	16.000	16.500	B_2	1¼	3	5	1½	66.2
72	S472	14½	18.000	18.500	B_2	1¼	3¼	5½	1½	82.9
80	S480	14½	20.000	20.500	B_2	1⅜	3¼	5½	1½	95.0
84	S484	14½	21.000	21.500	B_2	1⅜	3¼	5½	1½	92.0
88	S488	14½	22.000	22.500	B_2	1⅜	3¾	6⅛	1¾	95.8
96	S496	14½	24.000	24.500	B_2	1⅜	3¾	6⅛	1¾	124.0
120	S4120	14½	30.000	30.500	B_2	1⅜	3⅝	6	1¾	155.0
144	S4144	14½	36.000	36.500	B_2	1⅜	4	6½	1¾	208.0

* Recommended Maximum Bore With Keyway and Set Screw.
† Enlarged Pitch Diameter with Special Tooth Form.

14½° P.A. Gears Will Not Operate With 20° P.A.

Cast Iron Stock Spur Gears

14½°Pressure Angle

4 DP

2" Face

Type B
Plain With Hub

Type B_1
Web

Type B_2
Web With
Lighten Holes

Type B_3
Spoke Style

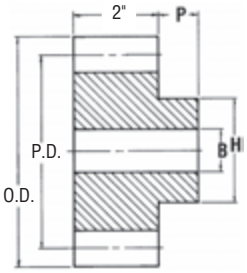

Type B

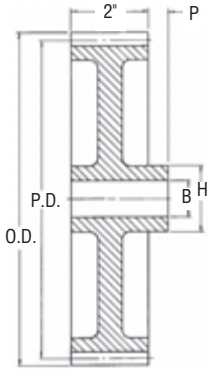

Type B_1, B_2, B_3

Cast — Style "B"

No. Teeth	Catalog Number	Pressure Angle (Deg.)	Diameter Pitch	Diameter Outside	Type	Bore (Inches) Stock	Bore (Inches) Max.*	Hub (Inches) Diameter	Hub (Inches) Proj.	Weight Lbs. (App.)
24	C424	14½	6.000	6.500	B	1⅛	2⅛	3½	1½	17.0 v
28	C428	14½	7.000	7.500	B_1	1¼	2⅛	3½	1½	20.2
30	C430	14½	7.500	8.000	B_1	1¼	2⅛	3½	1½	21.1
32	C432	14½	8.000	8.500	B_1	1¼	2⅛	3½	1½	23.2
36	C436	14½	9.000	9.500	B_2	1¼	2¼	3¾	1½	30.5
40	C440	14½	10.000	10.500	B_2	1¼	2½	4	1½	26.4
42	C442	14½	10.500	11.000	B_2	1¼	2½	4	1½	33.9
44	C444	14½	11.000	11.500	B_2	1¼	2½	4	1½	32.0
48	C448	14½	12.000	12.500	B_3	1¼	2½	4	1½	38.4
52	C452	14½	13.000	13.500	B_3	1¼	2½	4	1½	42.5
54	C454	14½	13.500	14.000	B_3	1¼	2½	4	1½	44.7
56	C456	14½	14.000	14.500	B_3	1¼	2½	4	1½	46.7
60	C460	14½	15.000	15.500	B_3	1¼	2½	4	1½	49.5
64	C464	14½	16.000	16.500	B_3	1¼	2½	4	1½	54.5
68	C468	14½	17.000	17.500	B_3	1¼	2½	4	1½	56.0
72	C472	14½	18.000	18.500	B_3	1¼	2 11/16	4½	1½	63.0
80	C480	14½	20.000	20.500	B_3	1⅜	2 11/16	4½	1½	72.0
84	C484	14½	21.000	21.500	B_3	1⅜	2 11/16	4½	1½	73.0
88	C488	14½	22.000	22.500	B_3	1⅜	2 11/16	4½	1¾	75.0
96	C496	14½	24.000	24.500	B_3	1⅜	2 11/16	4½	1¾	86.0
100	C4100	14½	25.000	25.500	B_3	1⅜	2 11/16	4½	1¾	91.0
104	C4104	14½	26.000	26.500	B_3	1⅜	2 11/16	4½	1¾	105.0
112	C4112	14½	28.000	28.500	B_3	1⅜	3⅛	5	1¾	108.0
120	C4120	14½	30.000	30.500	B_3	1⅜	3⅛	5	1¾	115.0
132	C4132	14½	33.000	33.500	B_3	1⅜	3⅛	5	1¾	129.0
144	C4144	14½	36.000	36.500	B_3	1⅜	3¼	5½	1¾	140.0

* Recommended Maximum Bore With Keyway and Set Screw.

14½° P.A. Gears Will Not Operate With 20° P.A.

5 DP
1¾" Face

Steel Stock Spur Gears
14½°Pressure Angle

Type B
Plain With Hub

Type B_2
Web With Lighten Holes

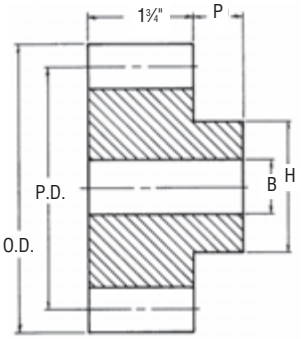

Type B

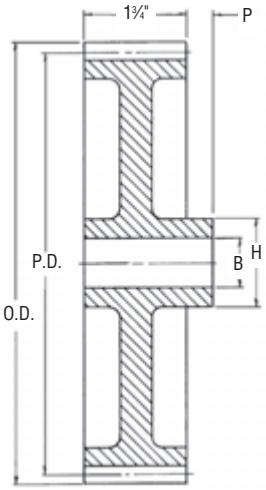

Type B_2

Steel

No. Teeth	Catalog Number	Pressure Angle (Deg.)	Diameter Pitch	Diameter Outside	Type	Bore (Inches) Stock	Bore (Inches) Max.*	Hub (Inches) Diameter	Hub (Inches) Proj.	Weight Lbs. (App.)
11	S511	14½	2.400†	2.800	B	1 1/16	1 1/16	1 25/32	⅞	2.0
12	S512	14½	2.400	2.800	B	1 1/16	1 1/16	1 25/32	⅞	2.0
13	S513	14½	2.600	3.000	B	1 1/16	1¼	2	⅞	2.6
14	S514	14½	2.800	3.200	B	1 1/16	1 5/16	2 3/16	⅞	3.1
15	S515	14½	3.000	3.400	B	1 1/16	1 7/16	2⅜	⅞	3.7
16	S516	14½	3.200	3.600	B	1 1/16	1⅝	2 19/32	⅞	4.5
17	S517	14½	3.400	3.800	B	1 1/16	1 13/16	2⅞	⅞	5.2
18	S518	14½	3.600	4.000	B	1 1/16	1⅞	3	⅞	5.9
19	S519	14½	3.800	4.200	B	1 1/16	2⅛	3¼	⅞	6.7
20	S520	14½	4.000	4.400	B	1 1/16	2¼	3⅜	⅞	7.5
21	S521	14½	4.200	4.600	B	1 1/16	2¼	3⅜	⅞	8.1
22	S522	14½	4.400	4.800	B	1 1/16	2¼	3⅜	⅞	8.8
23	S523	14½	4.600	5.000	B	1 1/16	2¼	3⅜	⅞	9.5
24	S524	14½	4.800	5.200	B	1 1/16	2¼	3⅜	1¼	11.0
25	S525	14½	5.000	5.400	B	1 1/16	2¼	3⅜	1¼	11.8
26	S526	14½	5.200	5.600	B	1 1/16	2¼	3⅜	1¼	12.9
28	S528	14½	5.600	6.000	B	1 1/16	2¼	3⅜	1¼	14.3
30	S530	14½	6.000	6.400	B	1 1/16	2¼	3⅜	1¼	16.0
35	S535	14½	7.000	7.400	B	1 3/16	2⅝	4¼	1¼	22.8
40	S540	14½	8.000	8.400	B	1 3/16	2⅝	4¼	1¼	28.5
45	S545	14½	9.000	9.400	B	1 3/16	2 11/16	4⅝	1¼	35.0
50	S550	14½	10.000	10.400	B	1 3/16	2 13/16	4¾	1¼	43.6
55	S555	14½	11.000	11.400	B	1 3/16	2 13/16	4¾	1¼	52.0
60	S560	14½	12.000	12.400	B	1 3/16	2 13/16	4¾	1¼	60.9
70	S570	14½	14.000	14.400	B_2	1 3/16	3⅛	5	1¼	48.4
80	S580	14½	16.000	16.400	B_2	1 3/16	3⅛	5	1¼	57.0
90	S590	14½	18.000	18.400	B_2	1 3/16	3⅛	5	1¼	67.0
100	S5100	14½	20.000	20.400	B_2	1 5/16	3¼	5½	1½	62.0
110	S5110	14½	22.000	22.400	B_2	1 5/16	3¼	5½	1½	87.6
120	S5120	14½	24.000	24.400	B_2	1 5/16	3½	6⅛	1½	113.0

* Recommended Maximum Bore With Keyway and Setscrew.
† Enlarged Pitch Diameter with Special Tooth Form.

14½° P.A. Gears Will Not Operate With 20° P.A.

Cast Iron Stock Spur Gears

14½°Pressure Angle

5 DP

1¾" Face

Type B
Plain With Hub

Type B_1
Web

Type B_2
Web With
Lighten Holes

Type B_3
Web With
Spokes

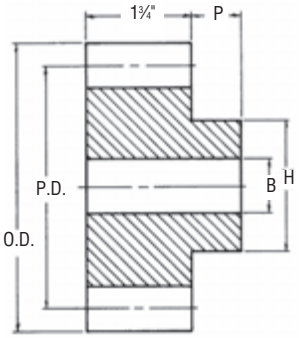

Type B

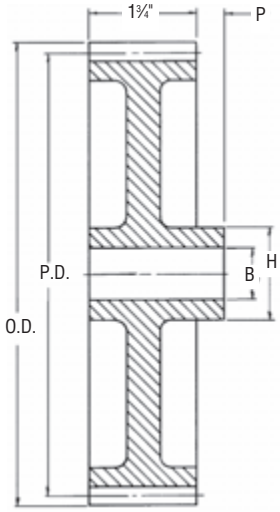

Type B_1, B_2, B_3

Cast — Style "B"

No. Teeth	Catalog Number	Pressure Angle (Deg.)	Diameter Pitch	Diameter Outside	Type	Bore (Inches) Stock	Bore (Inches) Max.*	Hub (Inches) Diameter	Hub (Inches) Proj.	Weight Lbs. (App.)
24	C524	14½	4.800	5.200	B	1 1/16	2 1/16	3¼	1¼	9.9
25	C525	14½	5.000	5.400	B	1 1/16	2 1/16	3¼	1¼	10.6
28	C528	14½	5.600	6.000	B_1	1 1/16	2 1/16	3¼	1¼	12.1
30	C530	14½	6.000	6.400	B_1	1 1/16	2 1/16	3¼	1¼	13.9
32	C532	14½	6.400	6.800	B_1	1 1/16	2 1/16	3¼	1¼	13.5
35	C535	14½	7.000	7.400	B_1	1 3/16	2 1/16	3¼	1¼	16.9
36	C536	14½	7.200	7.600	B_1	1 3/16	2 1/16	3¼	1¼	15.5
40	C540	14½	8.000	8.400	B_1	1 3/16	2 1/16	3¼	1¼	17.4
45	C545	14½	9.000	9.400	B_2	1 3/16	2 1/16	3¼	1¼	20.3
48	C548	14½	9.600	10.000	B_2	1 3/16	2 5/16	3¾	1¼	25.2
50	C550	14½	10.000	10.400	B_3	1 3/16	2 5/16	3¾	1¼	23.7
54	C554	14½	10.800	11.200	B_3	1 3/16	2 5/16	3¾	1¼	25.1
55	C555	14½	11.000	11.400	B_3	1 3/16	2 5/16	3¾	1¼	26.0
60	C560	14½	12.000	12.400	B_3	1 3/16	2 5/16	3¾	1¼	30.6
64	C564	14½	12.800	13.200	B_3	1 3/16	2 5/16	3¾	1¼	31.2
66	C566	14½	13.200	13.600	B_3	1 3/16	2 5/16	3¾	1¼	30.8
70	C570	14½	14.000	14.400	B_3	1 3/16	2 9/16	4	1¼	34.5
72	C572	14½	14.400	14.800	B_3	1 3/16	2 9/16	4	1¼	35.0
75	C575	14½	15.000	15.400	B_3	1 3/16	2 9/16	4	1¼	36.7
80	C580	14½	16.000	16.400	B_3	1 3/16	2 9/16	4	1¼	40.8
84	C584	14½	16.800	17.200	B_3	1 3/16	2 9/16	4	1¼	40.0
90	C590	14½	18.000	18.400	B_3	1 3/16	2 9/16	4	1¼	45.4
96	C596	14½	19.200	19.600	B_3	1 3/16	2 9/16	4	1¼	48.6
100	C5100	14½	20.000	20.400	B_3	1 5/16	2⅝	4½	1½	54.4
120	C5120	14½	24.000	24.400	B_3	1 5/16	2 13/16	4¾	1½	56.1
130	C5130	14½	26.000	26.400	B_3	1 5/16	2 13/16	4¾	1½	70.2

* Recommended maximum bore with keyway and set screw.
Quotes for large quantity discontinued cast iron sizes, contact your nearest Martin Facility.

14½° P.A. Gears Will Not Operate With 20° P.A.

6 DP
1½" Face

Steel Stock Spur Gears
14½°Pressure Angle

Type B
Plain With Hub

Type B_2
Web With
Lighten Holes

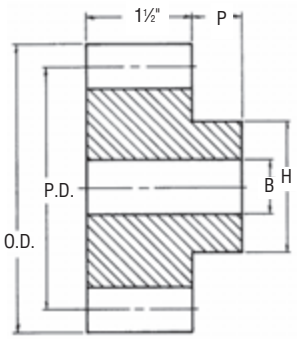

Type B

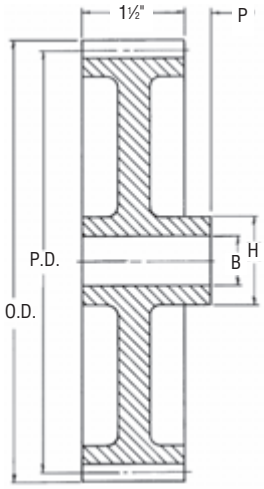

Type B_2

Steel

No. Teeth	Catalog Number	Pressure Angle (Deg.)	Diameter Pitch	Diameter Outside	Type	Bore (Inches) Stock	Bore (Inches) Max.*	Hub (Inches) Diameter	Hub (Inches) Proj.	Weight Lbs. (App.)
11	S611	14½	2.000†	2.333	B	1	**	1½	⅞	1.1
12	S612	14½	2.000	2.333	B	1	**	1½	⅞	1.1
14	S614	14½	2.333	2.666	B	1	1 1/16	1 13/16	⅞	1.8
15	S615	14½	2.500	2.833	B	1	1¼	2	⅞	2.2
16	S616	14½	2.666	3.000	B	1	1 5/16	2 5/32	⅞	2.6
18	S618	14½	3.000	3.333	B	1	1½	2½	⅞	3.5
20	S620	14½	3.333	3.666	B	1	1¾	2 27/32	⅞	4.6
21	S621	14½	3.500	3.833	B	1	1⅞	3	⅞	5.1
22	S622	14½	3.666	4.000	B	1	1⅞	3	⅞	5.5
24	S624	14½	4.000	4.333	B	1⅛	1⅞	3	1	6.5
27	S627	14½	4.500	4.833	B	1⅛	1⅞	3	1	6.6
28	S628	14½	4.666	5.000	B	1⅛	1⅞	3	1	8.3
30	S630	14½	5.000	5.333	B	1⅛	2”	3⅛	1	9.5
32	S632	14½	5.333	5.666	B	1⅛	2”	3⅛	1	10.7
33	S633	14½	5.500	5.833	B	1⅛	2⅛	3¼	1	11.3
36	S636	14½	6.000	6.333	B	1⅛	2⅛	3¼	1	13.3
39	S639	14½	6.500	6.833	B	1⅛	2½	4	1	16.6
40	S640	14½	6.666	7.000	B	1⅛	2½	4	1	17.6
42	S642	14½	7.000	7.333	B	1⅛	2½	4	1	18.9
45	S645	14½	7.500	7.833	B	1⅛	2½	4	1	21.3
48	S648	14½	8.000	8.333	B	1⅛	2½	4⅛	1	24.3
52	S652	14½	8.666	9.000	B	1⅛	2⅝	4¼	1	27.9
54	S654	14½	9.000	9.333	B	1⅛	2⅝	4⅜	1	30.4
58	S658	14½	9.666	10.000	B	1⅛	2⅝	4⅜	1	33.9
60	S660	14½	10.000	10.333	B	1¼	2⅝	4⅜	1¼	34.3
64	S664	14½	10.666	11.000	B	1¼	2⅝	4⅜	1¼	42.2
66	S666	14½	11.000	11.333	B	1¼	2⅝	4⅜	1¼	50.0
72	S672	14½	12.000	12.333	B	1¼	2 11/16	4⅜	1¼	53.0
84	S684	14½	14.000	14.333	B_2	1¼	2 11/16	4½	1¼	40.0
96	S696	14½	16.000	16.333	B_2	1¼	2 13/16	5⅛	1¼	43.8
108	S6108	14½	18.000	18.333	B_2	1¼	2 13/16	5⅛	1¼	53.0
120	S6120	14½	20.000	20.333	B_2	1¼	2 13/16	5⅛	1½	63.2
132	S6132	14½	22.000	22.333	B_2	1¼	2 13/16	5⅛	1½	68.3
144	S6144	14½	24.000	24.333	B_2	1¼	3⅛	5	1½	82.7

* Recommended maximum bore with keyway and set screw.
** Check application with factory.
† Enlarged pitch diameter with special tooth form.

14½° P.A. Gears Will Not Operate With 20° P.A.

Cast Iron Stock Spur Gears

14½°Pressure Angle

6 DP

1½" Face

Type B Plain With Hub

Type B_1 Web

Type B_2
Web With Lighten Holes

Type B_3
Spoke Style

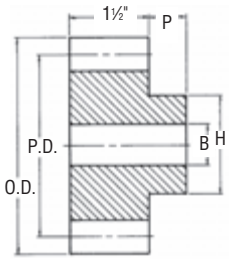

Type B

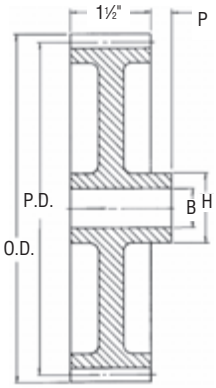

Type B_1, B_2, B_3

Cast — Style "B"

No. Teeth	Catalog Number	Pressure Angle (Deg.)	Diameter Pitch	Diameter Outside	Type	Bore (Inches) Stock	Bore (Inches) Max.*	Hub (Inches) Diameter	Hub (Inches) Proj.	Weight Lbs. (App.)
• 32	C632	14½	5.333	5.666	B_1	1⅛	1 7/16	2½	1	7.2
• 40	C640	14½	6.666	7.000	B_1	1⅛	1 13/16	3	1	11.9
• 42	C642	14½	7.000	7.333	B_1	1⅛	1 13/16	3	1	13.0
• 48	C648	14½	8.000	8.333	B_3	1⅛	1 13/16	3	1	12.1
• 54	C654	14½	9.000	9.333	B_3	1⅛	2 1/16	3¼	1	14.4
• 60	C660	14½	10.000	10.333	B_3	1¼	2 1/16	3¼	1¼	17.0
• 64	C664	14½	10.666	11.000	B_3	1¼	2 1/16	3¼	1¼	18.5
66	C666	14½	11.000	11.333	B_3	1¼	2 1/16	3¼	1¼	19.0
70	C670	14½	11.666	12.000	B_3	1¼	2 1/16	3¼	1¼	20.6
72	C672	14½	12.000	12.333	B_3	1¼	2 3/16	3½	1¼	23.7
75	C675	14½	12.500	12.833	B_3	1¼	2 3/16	3½	1¼	25.4
80	C680	14½	13.333	13.666	B_3	1¼	2 3/16	3½	1¼	25.8
84	C684	14½	14.000	14.333	B_3	1¼	2 3/16	3½	1¼	25.0
90	C690	14½	15.000	15.333	B_3	1¼	2 3/16	3½	1¼	25.8
96	C696	14½	16.000	16.333	B_3	1¼	2 3/16	3½	1¼	28.0
108	C6108	14½	18.000	18.333	B_3	1¼	2 5/16	3¾	1¼	32.0
120	C6120	14½	20.000	20.333	B_3	1¼	2 5/16	3¾	1½	34.8
132	C6132	14½	22.000	22.333	B_3	1¼	2 5/16	3¾	1½	43.4
144	C6144	14½	24.000	24.333	B_3	1¼	2 9/16	4	1½	45.2
180	C6180	14½	30.000	30.333	B_3	1¼	2 9/16	4	1½	58.3

* Recommended maximum bore with keyway and set screw
• Consult Factory.

Bored-to-Size

No. Teeth	Catalog Number	Pressure Angle (Deg.)	Diameter Pitch	Diameter Outside	Type	Bore (Inches) Stock	Bore (Inches) Keyway	Set Screw	Hub (Inches) Diameter	Hub (Inches) Proj.	Weight Lbs. (App.)
11	S611BS 1	14½	2.000	2.333	B	1	¼ × ⅛	(1) 1/4-20 @ 90	1½	⅞	1.10
12	S612BS 1	14½	2.000	2.333	B	1	¼ × ⅛	(1) 1/4-20 @ 90	1½	⅞	1.10
14	S614BS 1	14½	2.333	2.667	B	1	¼ × ⅛	(1) 5/16-18 @ 90	1 13/16	⅞	1.80
14	S614BS 1-1/8	14½	2.333	2.667	B	1⅛	¼ × ⅛	(1) 5/16-18 @ 90	1 13/16	⅞	1.80
15	S615BS 1	14½	2.500	2.833	B	1	¼ × ⅛	(1) 5/16-18 @ 90	2	⅞	2.20
15	S615BS 1-1/8	14½	2.500	2.833	B	1⅛	¼ × ⅛	(1) 5/16-18 @ 90	2	⅞	2.20
15	S615BS 1-3/16	14½	2.500	2.833	B	1 3/16	¼ × ⅛	(1) 5/16-18 @ 90	2	⅞	2.20
15	S615BS 1-1/4	14½	2.500	2.833	B	1¼	¼ × ⅛	(1) 5/16-18 @ 90	2	⅞	2.20
16	S616BS 1	14½	2.667	3.000	B	1	¼ × ⅛	(1) 5/16-18 @ 90	2 5/32	⅞	2.60
16	S616BS 1-1/8	14½	2.667	3.000	B	1⅛	¼ × ⅛	(1) 5/16-18 @ 90	2 5/32	⅞	2.60
16	S616BS 1-3/16	14½	2.667	3.000	B	1 3/16	¼ × ⅛	(1) 5/16-18 @ 90	2 5/32	⅞	2.60
16	S616BS 1-1/4	14½	2.667	3.000	B	1¼	¼ × ⅛	(1) 5/16-18 @ 90	2 5/32	⅞	2.60
18	S618BS 1	14½	3.000	3.333	B	1	¼ × ⅛	(1) 5/16-18 @ 90	2 ½	⅞	3.50
18	S618BS 1-1/8	14½	3.000	3.333	B	1⅛	¼ × ⅛	(1) 5/16-18 @ 90	2 ½	⅞	3.50
18	S618BS 1-3/16	14½	3.000	3.333	B	1 3/16	¼ × ⅛	(1) 5/16-18 @ 90	2 ½	⅞	3.50
18	S618BS 1-1/4	14½	3.000	3.333	B	1¼	¼ × ⅛	(1) 5/16-18 @ 90	2 ½	⅞	3.50
20	S620BS 1	14½	3.333	3.667	B	1	¼ × ⅛	(1) 5/16-18 @ 90	2 27/32	⅞	4.60
20	S620BS 1-1/8	14½	3.333	3.667	B	1⅛	¼ × ⅛	(1) 5/16-18 @ 90	2 27/32	⅞	4.60
20	S620BS 1-3/16	14½	3.333	3.667	B	1 3/16	¼ × ⅛	(1) 5/16-18 @ 90	2 27/32	⅞	4.60
20	S620BS 1-1/4	14½	3.333	3.667	B	1¼	¼ × ⅛	(1) 5/16-18 @ 90	2 27/32	⅞	4.60

14½° P.A. Gears Will Not Operate With 20° P.A.

8 DP
1¼" Face

Steel Stock Spur Gears
14½°Pressure Angle

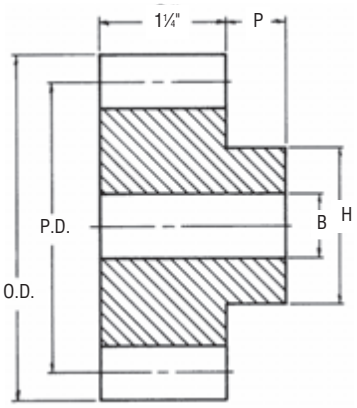

Type B

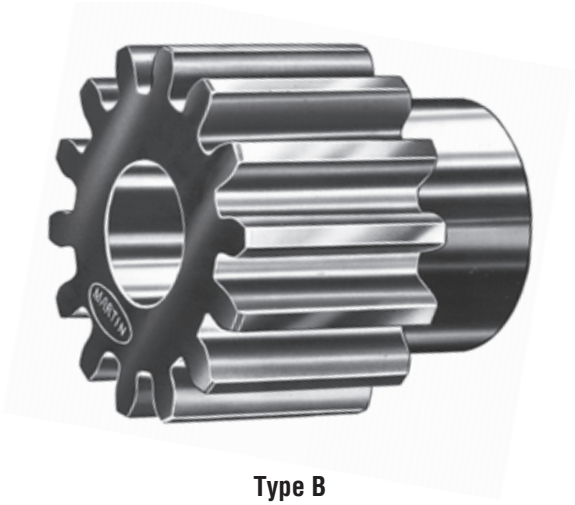

Type B
Plain With Hub

Steel

No. Teeth	Catalog Number	Pressure Angle (Deg.)	Diameter Pitch	Diameter Outside	Type	Bore (Inches) Stock	Bore (Inches) Max.*	Hub (Inches) Diameter	Hub (Inches) Proj.	Weight Lbs. (App.)
11	S811	14½	1.500†	1.750	B	¾	**	1⅛	¾	0.5
12	S812	14½	1.500	1.750	B	¾	**	1⅛	¾	0.5
13	S813	14½	1.625	1.875	B	¾	**	1¼	¾	0.7
14	S814	14½	1.750	2.000	B	¾	13/16	1⅜	¾	0.9
15	S815	14½	1.875	2.125	B	⅞	⅞	1½	¾	0.9
16	S816	14½	2.000	2.250	B	⅞	15/16	1⅝	¾	1.1
17	S817	14½	2.125	2.375	B	⅞	1	1¾	¾	1.3
18	S818	14½	2.250	2.500	B	⅞	1⅛	1⅞	¾	1.6
19	S819	14½	2.375	2.625	B	⅞	1¼	2	¾	1.8
20	S820	14½	2.500	2.750	B	⅞	1 5/16	2⅛	¾	2.0
21	S821	14½	2.625	2.875	B	⅞	1 7/16	2¼	¾	2.3
22	S822	14½	2.750	3.000	B	⅞	1⅝	2⅜	¾	2.6
24	S824	14½	3.000	3.250	B	⅞	1⅝	2⅝	1	3.6
26	S826	14½	3.250	3.500	B	⅞	1⅝	2⅝	1	3.9
28	S828	14½	3.500	3.750	B	⅞	1⅝	2⅝	1	4.4
30	S830	14½	3.750	4.000	B	⅞	1¾	2¾	1	5.1
32	S832	14½	4.000	4.250	B	1	1 13/16	2⅞	1	5.6
36	S836	14½	4.500	4.750	B	1	1⅞	3	1	7.0
40	S840	14½	5.000	5.250	B	1	1⅞	3	1	8.3
42	S842	14½	5.250	5.500	B	1	1⅞	3	1	9.0
44	S844	14½	5.500	5.750	B	1	1⅞	3	1	9.7
48	S848	14½	6.000	6.250	B	1	1⅞	3	1	11.3

* Recommended maximum bore with keyway and set screw.
** Check application with factory.
† Enlarged pitch diameter with special tooth form.

14½° P.A. Gears Will Not Operate With 20° P.A.

Cast Iron Stock Spur Gears

14½°Pressure Angle

8 DP

1¼" Face

Type B Plain With Hub

Type B_1 Web

Type B_2
Web With Lighten Holes

Type B_3
Spoke Style

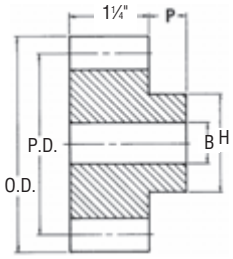

Type B

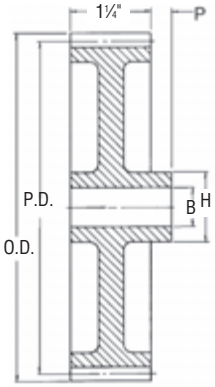

Type B_1, B_2, B_3

Cast — Style "B"

No. Teeth	Catalog Number	Pressure Angle (Deg.)	Diameter Pitch	Diameter Outside	Type	Bore (Inches) Stock	Bore (Inches) Max.*	Hub (Inches) Diameter	Hub (Inches) Proj.	Weight Lbs. (App.)
• 36	C836	14½	4.500	4.750	B_1	1	1 7/16	2½	1	4.5
• 40	C840	14½	5.000	5.250	B_1	1	1 7/16	2½	1	5.1
• 42	C842	14½	5.250	5.500	B_1	1	1 7/16	2½	1	5.5
• 44	C844	14½	5.500	5.750	B_1	1	1 7/16	2½	1	6.0
52	C852	14½	6.500	6.750	B_1	1	1 11/16	2¾	1	10.3
54	C854	14½	6.750	7.000	B_2	1	1 11/16	2¾	1	8.1
56	C856	14½	7.000	7.250	B_3	1	1 11/16	2¾	1	8.2
60	C860	14½	7.500	7.750	B_3	1	1 11/16	2¾	1	8.8
64	C864	14½	8.000	8.250	B_3	1	1 11/16	2¾	1	11.2
68	C868	14½	8.500	8.750	B_3	1	1 13/16	3"	1	11.5
72	C872	14½	9.000	9.250	B_3	1	1 13/16	3"	1	11.7
76	C876	14½	9.500	9.750	B_3	1	1 13/16	3"	1	12.0
80	C880	14½	10.000	10.250	B_3	1⅛	1 13/16	3"	1⅛	12.2
84	C884	14½	10.500	10.750	B_3	1⅛	1 13/16	3"	1⅛	13.2
88	C888	14½	11.000	11.250	B_3	1⅛	1 13/16	3"	1⅛	13.5
92	C892	14½	11.500	11.750	B_3	1⅛	2 1/16	3¼	1⅛	15.0
96	C896	14½	12.000	12.250	B_3	1⅛	2 1/16	3¼	1⅛	15.8
100	C8100	14½	12.500	12.750	B_3	1⅛	2 1/16	3¼	1⅛	16.5
112	C8112	14½	14.000	14.250	B_3	1⅛	2 1/16	3¼	1⅛	17.7
120	C8120	14½	15.000	15.250	B_3	1⅛	2 1/16	3¼	1⅛	18.4
128	C8128	14½	16.000	16.250	B_3	1⅛	2 3/16	3½	1⅛	21.3
144	C8144	14½	18.000	18.250	B_3	1⅛	2 3/16	3½	1⅛	24.2
160	C8160	14½	20.000	20.250	B_3	1⅛	2 5/16	3¾	1¼	26.6
168	C8168	14½	21.000	21.250	B_3	1⅛	2 5/16	3¾	1¼	28.9

* Recommended maximum bore with keyway and set screw.
• Consult Factory.

Bored-to-Size

No. Teeth	Catalog Number	Pressure Angle (Deg.)	Diameter Pitch	Diameter Outside	Type	Bore (Inches) Stock	Bore (Inches) Keyway	Set Screw	Hub (Inches) Diameter	Hub (Inches) Proj.	Weight Lbs. (App.)
11	S811BS 3/4	14½	1.500	1.750	B	¾	3/16 × 3/32	(1) 10-24 @ 90	1⅛	¾	0.50
12	S812BS 3/4	14½	1.500	1.750	B	¾	3/16 × 3/32	(1) 10-24 @ 90	1⅛	¾	0.50
14	S814BS 3/4	14½	1.750	2.000	B	¾	3/16 × 3/32	(1) 1/4-20 @ 90	1⅜	¾	0.90
15	S815BS 7/8	14½	1.875	2.125	B	⅞	3/16 × 3/32	(1) 1/4-20 @ 90	1½	¾	1.00
16	S816BS 7/8	14½	2.000	2.250	B	⅞	3/16 × 3/32	(1) 1/4-20 @ 90	1⅝	¾	1.10
16	S816BS 1	14½	2.000	2.250	B	1	¼ × ⅛	(1) 5/16-18 @ 90	1⅝	¾	1.10
18	S818BS 7/8	14½	2.250	2.500	B	⅞	3/16 × 3/32	(1) 1/4-20 @ 90	1⅞	¾	1.60
18	S818BS 1	14½	2.250	2.500	B	1	¼ × ⅛	(1) 5/16-18 @ 90	1⅞	¾	1.60
18	S818BS 1-1/8	14½	2.250	2.500	B	1⅛	¼ × ⅛	(1) 5/16-18 @ 90	1⅞	¾	1.60
20	S820BS 7/8	14½	2.500	2.750	B	⅞	3/16 × 3/32	(1) 1/4-20 @ 90	2⅛	¾	2.00
20	S820BS 1	14½	2.500	2.750	B	1	¼ × ⅛	(1) 5/16-18 @ 90	2⅛	¾	2.00
20	S820BS 1-1/8	14½	2.500	2.750	B	1⅛	¼ × ⅛	(1) 5/16-18 @ 90	2⅛	¾	2.00
22	S822BS 7/8	14½	2.750	3.000	B	⅞	3/16 × 3/32	(1) 1/4-20 @ 90	2⅜	¾	2.60
22	S822BS 1	14½	2.750	3.000	B	1	¼ × ⅛	(1) 5/16-18 @ 90	2⅜	¾	2.60
22	S822BS 1-1/8	14½	2.750	3.000	B	1⅛	¼ × ⅛	(1) 5/16-18 @ 90	2⅜	¾	2.60

14½° P.A. Gears Will Not Operate With 20° P.A.

10 DP
1" Face

Steel Stock Spur Gears
14½°Pressure Angle

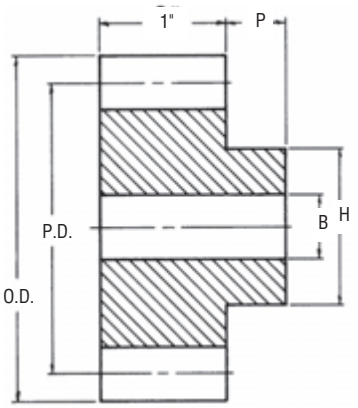

Type B

Type B
Plain With Hub

Steel

No. Teeth	Catalog Number	Pressure Angle (Deg.)	Diameter Pitch	Diameter Outside	Type	Bore (Inches) Stock	Bore (Inches) Max.*	Hub (Inches) Diameter	Hub (Inches) Proj.	Weight Lbs. (App.)
11	S1011	14½	1.200 †	1.400	B	⅝	**	15/16	⅝	0.3
12	S1012	14½	1.200	1.400	B	⅝	**	15/16	⅝	0.3
13	S1013	14½	1.300	1.500	B	⅝	**	1	⅝	0.3
14	S1014	14½	1.400	1.600	B	⅝	⅝	1⅛	⅝	0.4
15	S1015	14½	1.500	1.700	B	¾	¾	1 7/32	⅝	0.5
16	S1016	14½	1.600	1.800	B	¾	¾	1 5/16	⅝	0.6
17	S1017	14½	1.700	1.900	B	¾	13/16	1⅜	⅝	0.6
18	S1018	14½	1.800	2.000	B	¾	⅞	1 17/32	⅝	0.8
19	S1019	14½	1.900	2.100	B	¾	⅞	1 9/16	⅝	0.9
20	S1020	14½	2.000	2.200	B	¾	1	1 23/32	⅝	1.0
21	S1021	14½	2.100	2.300	B	¾	1	1¾	⅝	1.2
22	S1022	14½	2.200	2.400	B	¾	1⅛	1⅞	⅝	1.3
24	S1024	14½	2.400	2.600	B	¾	1¼	2⅛	⅝	1.6
25	S1025	14½	2.500	2.700	B	¾	1½	2 7/32	⅝	1.8
26	S1026	14½	2.600	2.800	B	¾	1¼	2⅛	⅝	1.9
28	S1028	14½	2.800	3.000	B	¾	1¼	2⅛	⅞	2.3
30	S1030	14½	3.000	3.200	B	¾	1¼	2⅛	⅞	2.6
32	S1032	14½	3.200	3.400	B	¾	1¼	2⅛	⅞	2.9
35	S1035	14½	3.500	3.700	B	¾	1 5/16	2¼	⅞	3.4
36	S1036	14½	3.600	3.800	B	¾	1 5/16	2¼	⅞	3.5
38	S1038	14½	3.800	4.000	B	¾	1 5/16	2¼	⅞	3.8
40	S1040	14½	4.000	4.200	B	⅞	1 5/16	2¼	⅞	4.1
42	S1042	14½	4.200	4.400	B	⅞	1 5/16	2¼	⅞	4.5
45	S1045	14½	4.500	4.700	B	⅞	1½	2½	⅞	5.3
48	S1048	14½	4.800	5.000	B	⅞	1½	2½	⅞	5.9
50	S1050	14½	5.000	5.200	B	⅞	1½	2½	⅞	6.4
54	S1054	14½	5.400	5.600	B	⅞	1½	2½	⅞	7.8
55	S1055	14½	5.500	5.700	B	⅞	1½	2½	⅞	7.9
60	S1060	14½	6.000	6.200	B	⅞	1½	2½	⅞	8.7

* Recommended maximum bore with keyway and set screw.
** Check application with factory.
† Enlarged pitch diameter with special tooth form.

14½° P.A. Gears Will Not Operate With 20° P.A.

Cast Iron Stock Spur Gears

14½°Pressure Angle

10 DP

1" Face

Type B
Plain With Hub

Type B_1
Web

Type B_2
Web With
Lighten Holes

Type B_3
Spoke Style

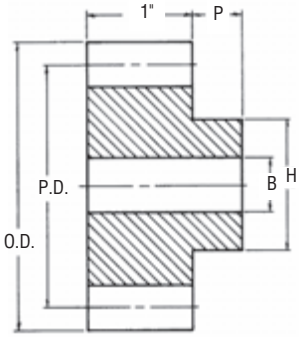

Type B

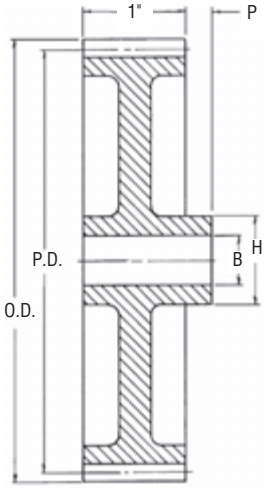

Type B_1, B_2, B_3

Cast — Style "B"

No. Teeth	Catalog Number	Pressure Angle (Deg.)	Diameter Pitch	Diameter Outside	Type	Bore (Inches) Stock	Bore (Inches) Max.*	Hub (Inches) Diameter	Hub (Inches) Proj.	Weight Lbs. (App.)
• 60	C1060	14½	6.000	6.200	B_3	⅞	1 3/16	2⅛	⅞	4.3
64	C1064	14½	6.400	6.600	B_3	⅞	1 7/16	2½	⅞	5.6
65	C1065	14½	6.500	6.700	B_3	⅞	1 7/16	2½	⅞	5.6
70	C1070	14½	7.000	7.200	B_3	⅞	1 7/16	2½	⅞	5.9
72	C1072	14½	7.200	7.500	B_3	⅞	1 7/16	2½	⅞	6.3
75	C1075	14½	7.500	7.700	B_3	⅞	1 7/16	2½	⅞	6.7
80	C1080	14½	8.000	8.200	B_3	⅞	1 7/16	2½	⅞	7.0
84	C1084	14½	8.400	8.600	B_3	⅞	1 7/16	2½	⅞	6.9
85	C1085	14½	8.500	8.700	B_3	⅞	1 7/16	2½	⅞	7.3
90	C1090	14½	9.000	9.200	B_3	⅞	1 7/16	2½	⅞	7.6
95	C1095	14½	9.500	9.700	B_3	⅞	1 7/16	2½	⅞	8.1
96	C1096	14½	9.600	9.800	B_3	⅞	1 7/16	2½	⅞	8.1
100	C10100	14½	10.000	10.200	B_3	1	1 7/16	2½	⅞	10.3
105	C10105	14½	10.500	10.700	B_3	1	1 7/16	2½	1	10.4
110	C10110	14½	11.000	11.200	B_3	1	1 11/16	2¾	1	10.0
112	C10112	14½	11.200	11.400	B_3	1	1 11/16	2¾	1	10.2
120	C10120	14½	12.000	12.200	B_3	1	1 11/16	2¾	1	11.1
130	C10130	14½	13.000	13.200	B_3	1	1 11/16	2¾	1	13.4
140	C10140	14½	14.000	14.200	B_1	1	1 11/16	2¾	1	30.8
150	C10150	14½	15.000	15.200	B_1	1	1 11/16	2¾	1	33.0
160	C10160	14½	16.000	16.200	B_1	1	1 11/16	2¾	1	38.3
180	C10180	14½	18.000	18.200	B_3	1	1 13/16	3	1	43.6

* Recommended maximum bore with keyway and set screw.
• Consult Factory.

Bored-to-Size

No. Teeth	Catalog Number	Pressure Angle (Deg.)	Diameter Pitch	Diameter Outside	Type	Bore (Inches) Stock	Bore (Inches) Keyway	Set Screw	Hub (Inches) Diameter	Hub (Inches) Proj.	Weight Lbs. (App.)
11	S1011BS 5/8	14½	1.200	1.400	B	⅝	3/16 X 3/32	(1) 10-24 @ 90	15/16	⅝	0.30
12	S1012BS 5/8	14½	1.200	1.400	B	⅝	3/16 X 3/32	(1) 10-24 @ 90	15/16	⅝	0.30
14	S1014BS 5/8	14½	1.400	1.600	B	⅝	3/16 X 3/32	(1) 1/4-20 @ 90	1⅛	⅝	0.40
15	S1015BS 3/4	14½	1.500	1.700	B	¾	3/16 X 3/32	(1) 1/4-20 @ 90	1 7/32	⅝	0.50
16	S1016BS 3/4	14½	1.600	1.800	B	¾	3/16 X 3/32	(1) 1/4-20 @ 90	1 5/16	⅝	0.60
18	S1018BS 3/4	14½	1.800	2.000	B	¾	3/16 X 3/32	(1) 1/4-20 @ 90	1 17/32	⅝	0.80
18	S1018BS 7/8	14½	1.800	2.000	B	⅞	3/16 X 3/32	(1) 1/4-20 @ 90	1 17/32	⅝	0.80
20	S1020BS 3/4	14½	2.000	2.200	B	¾	3/16 X 3/32	(1) 1/4-20 @ 90	1 23/32	⅝	1.00
20	S1020BS 7/8	14½	2.000	2.200	B	⅞	3/16 X 3/32	(1) 1/4-20 @ 90	1 23/32	⅝	1.00
20	S1020BS 1	14½	2.000	2.200	B	1	¼ X ⅛	(1) 5/16-18 @ 90	1 23/32	⅝	1.00
24	S1024BS 3/4	14½	2.400	2.600	B	¾	3/16 X 3/32	(1) 1/4-20 @ 90	2⅛	⅝	1.60
24	S1024BS 7/8	14½	2.400	2.600	B	⅞	3/16 X 3/32	(1) 1/4-20 @ 90	2⅛	⅝	1.60
24	S1024BS 1	14½	2.400	2.600	B	1	¼ X ⅛	(1) 5/16-18 @ 90	2⅜	⅝	1.60

14½° P.A. Gears Will Not Operate With 20° P.A.

12 DP
¾" Face

Steel Stock Spur Gears
14½°Pressure Angle

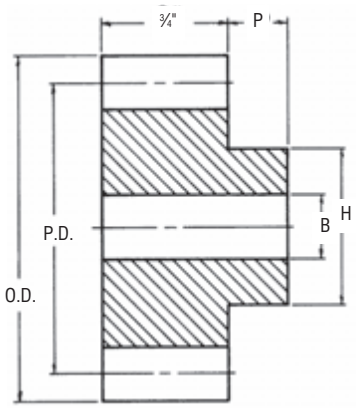

Type B

Type B
Plain With Hub

Steel

No. Teeth	Catalog Number	Pressure Angle (Deg.)	Diameter Pitch	Diameter Outside	Type	Bore (Inches) Stock	Bore (Inches) Max.*	Hub (Inches) Diameter	Hub (Inches) Proj.	Weight Lbs. (App.)
11	S1211	14½	1.000†	1.167	B	½	**	¾	½	0.14
12	S1212	14½	1.000	1.167	B	½	**	¾	½	0.16
13	S1213	14½	1.083	1.250	B	½	**	13/16	½	0.20
14	S1214	14½	1.167	1.333	B	½	**	29/32	½	0.24
15	S1215	14½	1.250	1.417	B	⅝	**	1	½	0.27
16	S1216	14½	1.333	1.500	B	⅝	⅝	1 1/16	½	0.34
17	S1217	14½	1.417	1.580	B	⅝	⅝	1⅛	½	0.36
18	S1218	14½	1.500	1.667	B	⅝	11/16	1¼	½	0.42
19	S1219	14½	1.583	1.750	B	⅝	¾	1 5/16	½	0.48
20	S1220	14½	1.667	1.833	B	⅝	13/16	1 13/32	½	0.56
21	S1221	14½	1.750	1.917	B	⅝	⅞	1½	½	0.64
22	S1222	14½	1.833	2.000	B	⅝	⅞	1 9/16	½	0.70
23	S1223	14½	1.917	2.083	B	⅝	15/16	1⅝	½	0.78
24	S1224	14½	2.000	2.166	B	⅝	1	1¾	½	0.88
25	S1225	14½	2.083	2.250	B	⅝	1 1/16	1 27/32	½	0.96
26	S1226	14½	2.167	2.333	B	⅝	1 3/16	1 15/16	⅝	1.14
28	S1228	14½	2.333	2.500	B	⅝	1½	2 1/16	⅝	1.34
30	S1230	14½	2.500	2.667	B	⅝	1 5/16	2¼	⅝	1.60
32	S1232	14½	2.667	2.833	B	⅝	1 5/16	2¼	⅝	1.72
34	S1234	14½	2.833	3.000	B	⅝	1 9/16	2¼	⅝	1.88
36	S1236	14½	3.000	3.167	B	⅝	1½	2½	⅝	2.20
38	S1238	14½	3.167	3.333	B	⅝	1½	2½	⅝	2.38
40	S1240	14½	3.333	3.500	B	⅝	1½	2½	⅝	2.54
42	S1242	14½	3.500	3.666	B	⅝	1½	2½	⅝	2.72
44	S1244	14½	3.667	3.833	B	⅝	1½	2½	⅝	2.94
48	S1248	14½	4.000	4.166	B	⅝	1½	2½	¾	3.50
54	S1254	14½	4.500	4.666	B	¾	1¾	2¾	¾	4.40
56	S1256	14½	4.667	4.833	B	¾	1¾	2¾	¾	4.60
60	S1260	14½	5.000	5.166	B	¾	1¾	2¾	¾	5.14
64	S1264	14½	5.333	5.500	B	¾	1¾	2¾	¾	5.74
66	S1266	14½	5.500	5.666	B	¾	1¾	2¾	¾	6.02
72	S1272	14½	6.000	6.166	B	¾	1¾	2¾	¾	7.02

* Recommended maximum bore with keyway and set screw.
** Check application with factory.
† Enlarged pitch diameter with special tooth form.

14½° P.A. Gears Will Not Operate With 20° P.A.

Cast Iron Stock Spur Gears

14½°Pressure Angle

12 DP

¾" Face

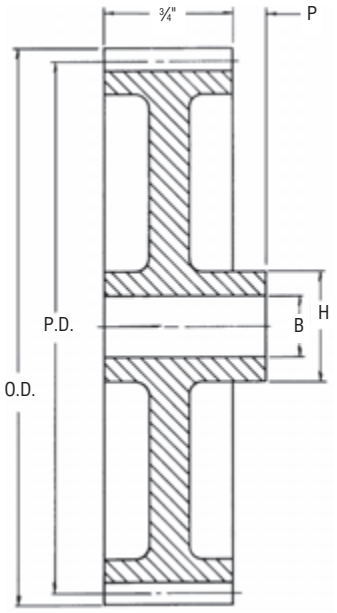

Type B_1, B_3

Type B_3
Spoke Style

Type B_1
Web

Cast — Style "B"

No. Teeth	Catalog Number	Pressure Angle (Deg.)	Diameter Pitch	Diameter Outside	Type	Bore (Inches) Stock	Bore (Inches) Max.*	Hub (Inches) Diameter	Hub (Inches) Proj.	Weight Lbs. (App.)
78	C1278	14½	6.500	6.666	B_3	¾	1 7/16	2½	¾	4.1
84	C1284	14½	7.000	7.166	B_3	¾	1 7/16	2½	¾	4.4
90	C1290	14½	7.500	7.666	B_3	¾	1 11/16	2¾	¾	5.2
96	C1296	14½	8.000	8.166	B_3	¾	1 11/16	2¾	¾	5.5
102	C12102	14½	8.500	8.666	B_3	¾	1 11/16	2¾	¾	5.9
108	C12108	14½	9.000	9.166	B_3	¾	1 11/16	2¾	¾	6.4
112	C12112	14½	9.333	9.500	B_3	¾	1 11/16	2¾	¾	6.4
114	C12114	14½	9.500	9.666	B_3	¾	1 11/16	2¾	¾	6.4
120	C12120	14½	10.000	10.166	B_3	⅞	1 11/16	2¾	¾	8.1
126	C12126	14½	10.500	10.666	B_3	⅞	1 13/16	3	¾	7.4
144	C12144	14½	12.000	12.166	B_3	⅞	1 13/16	3	1	10.1
168	C12168	14½	14.000	14.166	B_1	⅞	1 13/16	3	1	10.6

* Recommended maximum bore with keyway and set screw.

Bored-to-Size

No. Teeth	Catalog Number	Pressure Angle (Deg.)	Diameter Pitch	Diameter Outside	Type	Bore (Inches) Stock	Bore (Inches) Keyway	Set Screw	Hub (Inches) Diameter	Hub (Inches) Proj.	Weight Lbs. (App.)
11	S1211BS 1/2	14½	1.000	1.167	B	½	NONE	(1) 10-24	¾	½	0.14
12	S1212BS 1/2	14½	1.000	1.167	B	½	NONE	(1) 10-24	¾	½	0.16
13	S1213BS 1/2	14½	1.083	1.250	B	½	NONE	(1) 10-24	13/16	½	0.20
14	S1214BS 1/2	14½	1.167	1.333	B	½	NONE	(1) 10-24	29/32	⅝	0.24
15	S1215BS 5/8	14½	1.250	1.417	B	⅝	3/16 × 3/32	(1) 10-24 @ 90	1	½	0.27
16	S1216BS 5/8	14½	1.333	1.500	B	⅝	3/16 × 3/32	(1) 1/4-20 @ 90	1 1/16	½	0.34
18	S1218BS 5/8	14½	1.500	1.667	B	⅝	3/16 × 3/32	(1) 1/4-20 @ 90	1¼	½	0.42
20	S1220BS 5/8	14½	1.667	1.833	B	⅝	3/16 × 3/32	(1) 1/4-20 @ 90	1 13/32	½	0.56
20	S1220BS 3/4	14½	1.667	1.833	B	¾	3/16 × 3/32	(1) 1/4-20 @ 90	1 13/32	½	0.56
21	S1221BS 5/8	14½	1.750	1.917	B	⅝	3/16 × 3/32	(1) 1/4-20 @ 90	1 13/32	½	0.56
21	S1221BS 3/4	14½	1.750	1.917	B	¾	3/16 × 3/32	(1) 1/4-20 @ 90	1 13/32	½	0.56
21	S1221BS 7/8	14½	1.750	1.917	B	⅞	3/16 × 3/32	(1) 1/4-20 @ 90	1 13/32	½	0.56
22	S1222BS 5/8	14½	1.833	2.000	B	⅝	3/16 × 3/32	(1) 1/4-20 @ 90	1 9/16	½	0.70
22	S1222BS 3/4	14½	1.833	2.000	B	¾	3/16 × 3/32	(1) 1/4-20 @ 90	1 9/16	½	0.70
22	S1222BS 7/8	14½	1.833	2.000	B	⅞	3/16 × 3/32	(1) 1/4-20 @ 90	1 9/16	½	0.70
22	S1222BS 1	14½	1.833	2.000	B	1	¼ × ⅛	(1) 5/16-18 @ 90	1 9/16	½	0.70
24	S1224BS 5/8	14½	2.000	2.167	B	⅝	3/16 × 3/32	(1) 1/4-20 @ 90	1¾	½	0.88
24	S1224BS 3/4	14½	2.000	2.167	B	¾	3/16 × 3/32	(1) 1/4-20 @ 90	1¾	½	0.88
24	S1224BS 7/8	14½	2.000	2.167	B	⅞	3/16 × 3/32	(1) 1/4-20 @ 90	1¾	½	0.88
24	S1224BS 1	14½	2.000	2.167	B	1	¼ × ⅛	(1) 5/16-18 @ 90	1¾	½	0.88

14½° P.A. Gears Will Not Operate With 20° P.A.

16 DP
½" Face

Steel Stock Spur Gears
14½°Pressure Angle

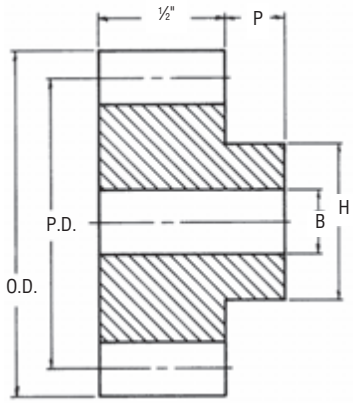

Type B

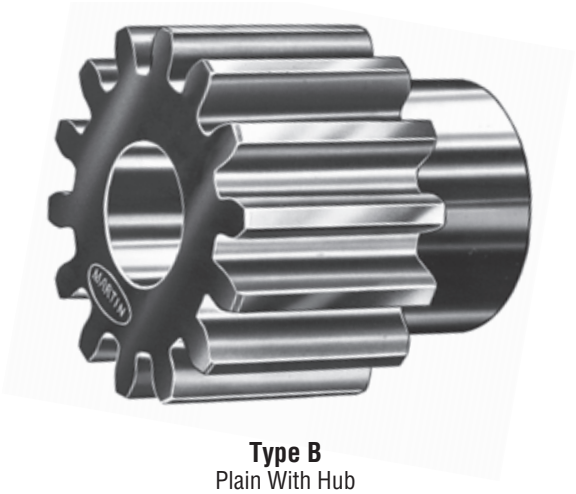

Type B
Plain With Hub

Steel

No. Teeth	Catalog Number	Pressure Angle (Deg.)	Diameter Pitch	Diameter Outside	Type	Bore (Inches) Stock	Bore (Inches) Max.*	Hub (Inches) Diameter	Hub (Inches) Proj.	Weight Lbs. (App.)
11	S1611	14½	0.750†	0.875	B	⅜	**	9/16	7/16	0.06
12	S1612	14½	0.750	0.875	B	⅜	**	9/16	7/16	0.06
13	S1613	14½	0.812	0.937	B	⅜	**	⅝	7/16	0.08
14	S1614	14½	0.875	1.000	B	⅜	**	11/16	7/16	0.08
15	S1615	14½	0.937	1.062	B	½	**	¾	7/16	0.10
16	S1616	14½	1.000	1.125	B	½	**	13/16	7/16	0.12
17	S1617	14½	1.062	1.187	B	½	**	⅞	7/16	0.14
18	S1618	14½	1.125	1.250	B	½	**	15/16	7/16	0.16
19	S1619	14½	1.187	1.312	B	½	½	1	7/16	0.20
20	S1620	14½	1.250	1.375	B	½	9/16	1 1/16	7/16	0.22
21	S1621	14½	1.312	1.438	B	½	⅝	1⅛	7/16	0.24
22	S1622	14½	1.375	1.500	B	½	⅝	1 3/16	7/16	0.28
23	S1623	14½	1.437	1.562	B	½	11/16	1¼	7/16	0.32
24	S1624	14½	1.500	1.625	B	½	¾	1 5/16	7/16	0.34
26	S1626	14½	1.625	1.750	B	½	⅞	1 7/16	7/16	0.42
28	S1628	14½	1.750	1.875	B	½	⅞	1½	½	0.52
30	S1630	14½	1.875	2.000	B	½	15/16	1⅝	½	0.60
32	S1632	14½	2.000	2.125	B	½	1	1¾	½	0.70
34	S1634	14½	2.125	2.250	B	½	1⅛	1⅞	½	0.80
36	S1636	14½	2.250	2.375	B	½	1¼	2	½	0.92
38	S1638	14½	2.375	2.500	B	½	1¼	2	½	0.98
40	S1640	14½	2.500	2.626	B	½	1¼	2	½	1.10
44	S1644	14½	2.750	2.875	B	½	1¼	2	½	1.20
48	S1648	14½	3.000	3.125	B	½	1¼	2	½	1.40
52	S1652	14½	3.250	3.375	B	½	1¼	2	½	1.50
54	S1654	14½	3.375	3.500	B	½	1¼	2	½	1.60
56	S1656	14½	3.500	3.625	B	½	1¼	2	½	1.70
60	S1660	14½	3.750	3.875	B	½	1¼	2	½	1.30
64	S1664	14½	4.000	4.125	B	⅝	1¼	2	⅝	2.20
68	S1668	14½	4.250	4.375	B	⅝	1 5/16	2¼	⅝	2.50
72	S1672	14½	4.500	4.625	B	⅝	1 5/16	2¼	⅝	2.80
80	S1680	14½	5.000	5.125	B	⅝	1 5/16	2¼	⅝	3.40
84	S1684	14½	5.250	5.375	B	⅝	1 5/16	2¼	⅝	3.60
88	S1688	14½	5.500	5.625	B	⅝	1 5/16	2¼	⅝	3.90
96	S1696	14½	6.000	6.125	B	⅝	1 5/16	2¼	⅝	4.60
104	S16104	14½	6.500	6.625	B	⅝	1 5/16	2¼	⅝	5.20

* Recommended maximum bore with keyway and set screw.
** Check application with factory.
† Enlarged pitch diameter with special tooth form.

14½° P.A. Gears Will Not Operate With 20° P.A.

Cast Iron Stock Spur Gears

14½°Pressure Angle

16 DP

½" Face

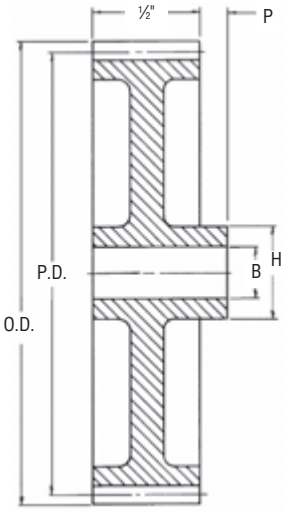

Type B_1, B_3

Type B_3
Spoke Style

Type B_1
Web

Cast — Style "B"

No. Teeth	Catalog Number	Pressure Angle (Deg.)	Diameter		Type	Bore (Inches)		Hub (Inches)		Weight Lbs. (App.)
			Pitch	Outside		Stock	Max.*	Diameter	Proj.	
112	C16112	14½	7.000	7.125	B_3	⅝	1 7/16	2½	⅝	3.4
120	C16120	14½	7.500	7.625	B_3	⅝	1 7/16	2½	⅝	3.5
128	C16128	14½	8.000	8.125	B_3	⅝	1 7/16	2½	⅝	3.7
144	C16144	14½	9.000	9.125	B_3	⅝	1 11/16	2¾	¾	5.0
160	C16160	14½	10.000	10.125	B_3	⅝	1 11/16	2¾	¾	5.2
192	C16192	14½	12.000	12.125	B_1	⅝	1 11/16	2¾	¾	8.1

* Recommended maximum bore with keyway and set screw.

Bored-to-Size

No. Teeth	Catalog Number	Pressure Angle (Deg.)	Diameter		Type	Bore (Inches)		Set Screw	Hub (Inches)		Weight Lbs. (App.)
			Pitch	Outside		Stock	Keyway		Diameter	Proj.	
11	S1611BS 3/8	14½	0.750	0.875	B	⅜	None	(1) 8-32	9/16	7/16	0.06
12	S1612BS 3/8	14½	0.752	0.875	B	⅜	None	(1) 8-32	9/16	7/16	0.06
13	S1613BS 3/8	14½	0.812	0.937	B	⅜	None	(1) 8-32	⅝	7/16	0.08
14	S1614BS 3/8	14½	0.875	1.000	B	⅜	None	(1) 10-24	11/16	7/16	0.08
15	S1615BS 1/2	14½	0.937	1.062	B	½	None	(1) 10-24	¾	7/16	0.10
16	S1616BS 1/2	14½	1.000	1.125	B	½	None	(1) 10-24	13/16	7/16	0.12
18	S1618BS 1/2	14½	1.125	1.250	B	½	None	(1) 1/4-20	15/16	7/16	0.16
20	S1620BS 1/2	14½	1.250	1.375	B	½	None	(1) 1/4-20	1 1/16	7/16	0.22
20	S1620BS 5/8	14½	1.250	1.375	B	⅝	3/16 × 3/32	(1) 1/4-20 @ 90	1 1/16	7/16	0.22
22	S1622BS 1/2	14½	1.375	1.500	B	½	None	(1) 1/4-20	1 3/16	7/16	0.28
22	S1622BS 5/8	14½	1.375	1.500	B	⅝	3/16 × 3/32	(1) 1/4-20 @ 90	1 3/16	7/16	0.28
24	S1624BS 1/2	14½	1.500	1.625	B	½	None	(1) 1/4-20	1 5/16	7/16	0.34
24	S1624BS 5/8	14½	1.500	1.625	B	⅝	3/16 × 3/32	(1) 1/4-20 @ 90	1 5/16	7/16	0.34
24	S1624BS 3/4	14½	1.500	1.625	B	¾	3/16 × 3/32	(1) 1/4-20 @ 90	1 5/16	7/16	0.34
26	S1626BS 1/2	14½	1.625	1.750	B	½	None	(1) 1/4-20	1 7/16	7/16	0.42
26	S1626BS 5/8	14½	1.625	1.750	B	⅝	3/16 × 3/32	(1) 1/4-20 @ 90	1 7/16	7/16	0.42
26	S1626BS 3/4	14½	1.625	1.750	B	¾	3/16 × 3/32	(1) 1/4-20 @ 90	1 7/16	7/16	0.42
28	S1628BS 1/2	14½	1.750	1.875	B	½	None	(1) 1/4-20	1½	½	0.52
28	S1628BS 5/8	14½	1.750	1.875	B	⅝	3/16 × 3/32	(1) 1/4-20 @ 90	1½	½	0.52
28	S1628BS 3/4	14½	1.750	1.875	B	¾	3/16 × 3/32	(1) 1/4-20 @ 90	1½	½	0.52
28	S1628BS 7/8	14½	1.750	1.875	B	⅞	3/16 × 3/32	(1) 1/4-20 @ 90	1½	½	0.52
30	S1630BS 1/2	14½	1.875	2.000	B	½	None	(1) 1/4-20	1⅝	½	0.60
30	S1630BS 5/8	14½	1.875	2.000	B	⅝	3/16 × 3/32	(1) 1/4-20 @ 90	1⅝	½	0.60
30	S1630BS 3/4	14½	1.875	2.000	B	¾	3/16 × 3/32	(1) 1/4-20 @ 90	1⅝	½	0.60
30	S1630BS 7/8	14½	1.875	2.000	B	⅞	3/16 × 3/32	(1) 1/4-20 @ 90	1⅝	½	0.60
30	S1630BS 1	14½	1.875	2.000	B	1	¼ × ⅛	(1) 5/16-18 @ 90	1⅝	½	0.60
32	S1632BS 1/2	14½	2.000	2.125	B	½	None	(1) 1/4-20	1¾	½	0.70
32	S1632BS 5/8	14½	2.000	2.125	B	⅝	3/16 × 3/32	(1) 1/4-20 @ 90	1¾	½	0.70
32	S1632BS 3/4	14½	2.000	2.125	B	¾	3/16 × 3/32	(1) 1/4-20 @ 90	1¾	½	0.70
32	S1632BS 7/8	14½	2.000	2.125	B	⅞	3/16 × 3/32	(1) 1/4-20 @ 90	1¾	½	0.70
32	S1632BS 1	14½	2.000	2.125	B	1	¼ × ⅛	(1) 5/16-18 @ 90	1¾	½	0.70

14½° P.A. Gears Will Not Operate With 20° P.A.

20 DP
3/8" Face

Steel Stock Spur Gears
14½°Pressure Angle

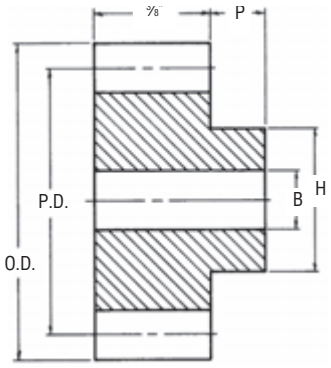

Type B

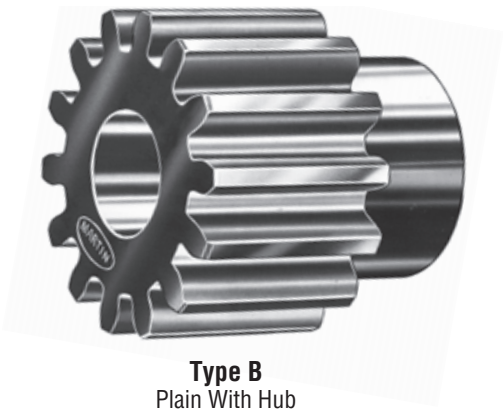

Type B
Plain With Hub

Steel

No. Teeth	Catalog Number	Pressure Angle (Deg.)	Diameter Pitch	Diameter Outside	Type	Bore (Inches) Stock	Bore (Inches) Max.*	Hub (Inches) Diameter	Hub (Inches) Proj.	Weight Lbs. (App.)
11	S2011	14½	0.600†	0.700	B	5/16	**	15/32	3/8	0.02
12	S2012	14½	0.600	0.700	B	5/16	**	15/32	3/8	0.02
13	S2013	14½	0.650	0.750	B	5/16	**	1/2	3/8	0.04
14	S2014	14½	0.700	0.800	B	5/16	**	35/64	3/8	0.04
15	S2015	14½	0.750	0.850	B	3/8	**	39/64	3/8	0.04
16	S2016	14½	0.800	0.900	B	3/8	**	21/32	3/8	0.04
17	S2017	14½	0.850	0.950	B	3/8	**	45/64	3/8	0.08
18	S2018	14½	0.900	1.000	B	3/8	**	3/4	3/8	0.08
19	S2019	14½	0.950	1.050	B	3/8	**	51/64	3/8	0.10
20	S2020	14½	1.000	1.100	B	3/8	**	55/64	3/8	0.12
21	S2021	14½	1.050	1.150	B	3/8	**	7/8	3/8	0.12
22	S2022	14½	1.100	1.200	B	3/8	**	31/32	3/8	0.14
23	S2023	14½	1.150	1.250	B	3/8	**	31/32	3/8	0.16
24	S2024	14½	1.200	1.300	B	3/8	9/16	1 1/16	3/8	0.19
25	S2025	14½	1.250	1.350	B	3/8	5/8	1 7/64	3/8	0.20
28	S2028	14½	1.400	1.500	B	3/8	11/16	1 17/64	3/8	0.26
30	S2030	14½	1.500	1.600	B	3/8	13/16	1 23/64	3/8	0.30
32	S2032	14½	1.600	1.700	B	3/8	7/8	1 7/16	1/2	0.40
35	S2035	14½	1.750	1.850	B	3/8	7/8	1 9/16	1/2	0.50
36	S2036	14½	1.800	1.900	B	3/8	15/16	1 5/8	1/2	0.52
40	S2040	14½	2.000	2.100	B	3/8	1 1/16	1 13/16	1/2	0.64
45	S2045	14½	2.250	2.350	B	3/8	1 1/4	2	1/2	0.82
48	S2048	14½	2.400	2.500	B	3/8	1 1/4	2	1/2	0.88
50	S2050	14½	2.500	2.600	B	3/8	1 1/4	2	1/2	0.90
55	S2055	14½	2.750	2.850	B	3/8	1 1/4	2	1/2	1.04
60	S2060	14½	3.000	3.100	B	3/8	1 1/4	2	1/2	1.16
64	S2064	14½	3.200	3.300	B	3/8	1 1/4	2	1/2	1.26
70	S2070	14½	3.500	3.600	B	3/8	1 1/4	2	1/2	1.40
72	S2072	14½	3.600	3.700	B	3/8	1 5/16	2 1/4	1/2	1.60
75	S2075	14½	3.750	3.850	B	3/8	1 5/16	2 1/4	1/2	1.70
80	S2080	14½	4.000	4.100	B	1/2	1 5/16	2 1/4	1/2	1.82
84	S2084	14½	4.200	4.300	B	1/2	1 5/16	2 1/4	1/2	1.96
90	S2090	14½	4.500	4.600	B	1/2	1 5/16	2 1/4	1/2	2.20
96	S2096	14½	4.800	4.900	B	1/2	1 5/16	2 1/4	1/2	2.42
100	S20100	14½	5.000	5.100	B	1/2	1 5/16	2 1/4	1/2	2.60
112	S20112	14½	5.600	5.700	B	1/2	1	1 3/4	1/2	2.86
120	S20120	14½	6.000	6.100	B_1	1/2	1	1 3/4	1/2	3.24
132	S20132	14½	6.600	6.700	B	1/2	1	1 3/4	1/2	3.80

* Recommended maximum bore with keyway and set screw.
** Check application with factory.
† Enlarged pitch diameter with special tooth form.

14½° P.A. Gears Will Not Operate With 20° P.A.

Cast Iron Stock Spur Gears

14½°Pressure Angle

20 DP

3/8" Face

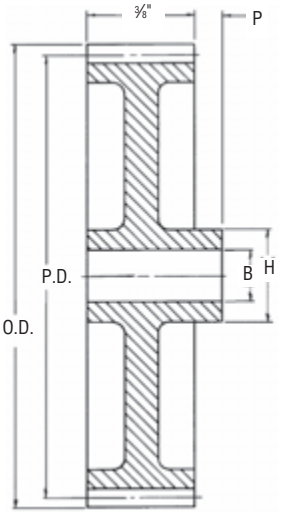

Type B_1, B_3

Type B_3
Spoke Style

Type B_1
Web

Cast — Style "B"

No. Teeth	Catalog Number	Pressure Angle (Deg.)	Diameter		Type	Bore (Inches)		Hub (Inches)		Weight Lbs. (App.)
			Pitch	Outside		Stock	Max.*	Diameter	Proj.	
• 48	C2048	14½	2.400	2.500	B_1	⅜	9/16	1⅛	½	0.50
• 64	C2064	14½	3.200	3.300	B_1	⅜	9/16	1⅛	½	0.68
140	C20140	14½	7.000	7.100	B_1	½	1	1¾	½	2.00
160	C20160	14½	8.000	8.100	B_1	½	1	1¾	⅝	2.34
180	C20180	14½	9.000	9.100	B_1	½	1	1¾	⅝	2.66
200	C20200	14½	10.000	10.100	B_1	½	1	1¾	⅝	2.84

* Recommended maximum bore with keyway and set screw.
• Consult Factory.

Bored-to-Size

No. Teeth	Catalog Number	Pressure Angle (Deg.)	Diameter		Type	Bore (Inches)		Set Screw	Hub (Inches)		Weight Lbs. (App.)
			Pitch	Outside		Stock	Keyway		Diameter	Proj.	
11	S2011BS 5/16	14½	0.600	0.700	B	5/16	None	#35 P.H.	15/32	⅜	0.02
12	S2012BS 5/16	14½	0.600	0.700	B	5/16	None	#35 P.H.	15/32	⅜	0.02
13	S2013BS 5/16	14½	0.650	0.750	B	5/16	None	#35 P.H.	½	⅜	0.04
14	S2014BS 5/16	14½	0.700	0.800	B	5/16	None	#35 P.H.	35/64	⅜	0.04
15	S2015BS 3/8	14½	0.750	0.850	B	⅜	None	(1) 8-32	39/64	⅜	0.04
16	S2016BS 3/8	14½	1.800	0.900	B	⅜	None	(1) 8-32	21/32	⅜	0.04
18	S2018BS 3/8	14½	1.900	1.000	B	⅜	None	(1) 10-24	¾	⅜	0.08
20	S2020BS 3/8	14½	1.000	1.100	B	⅜	None	(1) 10-24	55/64	⅜	0.12
20	S2020BS 1/2	14½	1.000	1.100	B	½	None	(1) 10-24	55/64	⅜	0.12
22	S2022BS 3/8	14½	1.100	1.200	B	⅜	None	(1) 1/4-20	31/32	⅜	0.14
22	S2022BS 1/2	14½	1.100	1.200	B	½	None	(1) 1/4-20	31/32	⅜	0.14
24	S2024BS 3/8	14½	1.200	1.300	B	⅜	None	(1) 1/4-20	1 1/16	⅜	0.19
24	S2024BS 1/2	14½	1.200	1.300	B	½	None	(1) 1/4-20	1 1/16	⅜	0.19
25	S2025BS 3/8	14½	1.250	1.350	B	⅜	None	(1) 1/4-20	1 7/64	⅜	0.20
25	S2025BS 1/2	14½	1.250	1.350	B	½	None	(1) 1/4-20	1 7/64	⅜	0.20
28	S2028BS 3/8	14½	1.400	1.500	B	⅜	None	(1) 1/4-20	1 17/64	⅜	0.26
28	S2028BS 1/2	14½	1.400	1.500	B	½	None	(1) 1/4-20	1 17/64	⅜	0.26
30	S2030BS 3/8	14½	1.500	1.600	B	⅜	None	(1) 1/4-20	1 23/64	⅜	0.30
30	S2030BS 1/2	14½	1.500	1.600	B	½	None	(1) 1/4-20	1 23/64	⅜	0.30
32	S2032BS 3/8	14½	1.600	1.700	B	⅜	None	(1) 1/4-20	1 7/16	½	0.40
32	S2032BS 1/2	14½	1.600	1.700	B	½	None	(1) 1/4-20	1 7/16	½	0.40
35	S2035BS 3/8	14½	1.750	1.850	B	⅜	None	(1) 1/4-20	1 9/16	½	0.50
35	S2035BS 1/2	14½	1.750	1.850	B	½	None	(1) 1/4-20	1 9/16	½	0.50
36	S2036BS 3/8	14½	1.800	1.900	B	⅜	None	(1) 1/4-20	1⅝	½	0.52
36	S2036BS 1/2	14½	1.800	1.900	B	½	None	(1) 1/4-20	1⅝	½	0.52
40	S2040BS 3/8	14½	2.000	2.100	B	⅜	None	(1) 1/4-20	1 13/16	½	0.64
40	S2040BS 1/2	14½	2.000	2.100	B	½	None	(1) 1/4-20	1 13/16	½	0.64
40	S2040BS 5/8	14½	2.000	2.100	B	⅝	3/16 × 3/32	(1) 1/4-20 @ 90	1 13/16	½	0.64
40	S2040BS 3/4	14½	2.000	2.100	B	¾	3/16 × 3/32	(1) 1/4-20 @ 90	1 13/16	½	0.64

14½° P.A. Gears Will Not Operate With 20° P.A.

24 DP
¼" Face

Steel Stock Spur Gears
14½°Pressure Angle

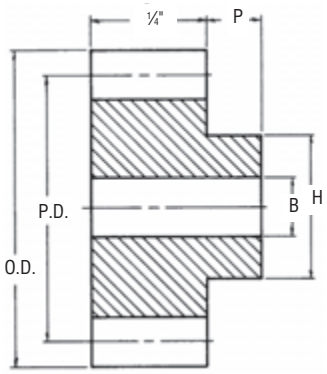

Type B

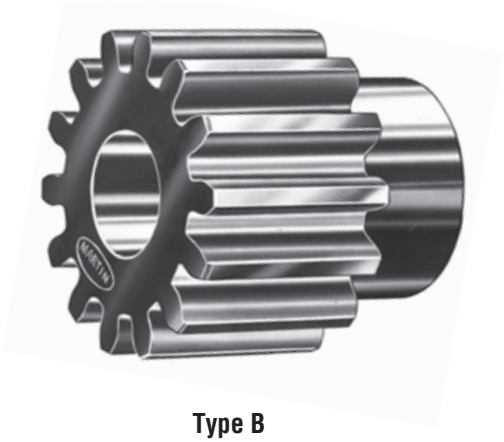

Type B
Plain With Hub

Steel

No. Teeth	Catalog Number	Pressure Angle (Deg.)	Diameter		Type	Bore (Inches)		Hub (Inches)		Weight Lbs. (App.)
			Pitch	Outside		Stock	Max.*	Diameter	Proj.	
11	S2411	14½	0.500†	0.583	B	¼	**	⅜	5/16	0.02
12	S2412	14½	0.500	0.583	B	¼	**	⅜	5/16	0.02
14	S2414	14½	0.583	0.666	B	¼	**	15/32	5/16	0.04
15	S2415	14½	0.625	0.708	B	¼	**	½	5/16	0.04
16	S2416	14½	0.666	0.750	B	5/16	**	35/64	5/16	0.04
17	S2417	14½	0.709	0.791	B	5/16	**	9/16	5/16	0.04
18	S2418	14½	0.750	0.833	B	5/16	**	⅝	5/16	0.04
19	S2419	14½	0.791	0.875	B	5/16	**	⅝	5/16	0.06
20	S2420	14½	0.833	0.917	B	5/16	**	23/32	5/16	0.06
21	S2421	14½	0.875	0.959	B	⅜	**	¾	5/16	0.06
22	S2422	14½	0.917	1.000	B	⅜	**	¾	5/16	0.06
24	S2424	14½	1.000	1.083	B	⅜	**	⅞	⅜	0.10
26	S2426	14½	1.083	1.166	B	⅜	**	⅞	⅜	0.10
27	S2427	14½	1.125	1.208	B	⅜	**	⅞	⅜	0.12
30	S2430	14½	1.250	1.333	B	⅜	½	1	⅜	0.16
32	S2432	14½	1.333	1.416	B	⅜	½	1	⅜	0.20
33	S2433	14½	1.375	1.458	B	⅜	⅝	1⅛	⅜	0.20
36	S2436	14½	1.500	1.583	B	⅜	⅝	1⅛	⅜	0.20
40	S2440	14½	1.666	1.750	B	⅜	⅝	1⅛	⅜	0.24
42	S2442	14½	1.750	1.833	B	⅜	11/16	1¼	⅜	0.28
44	S2444	14½	1.833	1.917	B	⅜	11/16	1¼	⅜	0.30
45	S2445	14½	1.875	1.959	B	⅜	11/16	1¼	⅜	0.30
48	S2448	14½	2.000	2.083	B	⅜	11/16	1¼	⅜	0.32
54	S2454	14½	2.250	2.333	B	⅜	11/16	1¼	⅜	0.38
56	S2456	14½	2.333	2.416	B	⅜	11/16	1¼	⅜	0.40
60	S2460	14½	2.500	2.583	B	⅜	11/16	1¼	⅜	0.46
66	S2466	14½	2.750	2.833	B	⅜	11/16	1¼	⅜	0.52
72	S2472	14½	3.000	3.083	B	½	13/16	1⅜	½	0.64
84	S2484	14½	3.500	3.583	B	½	⅞	1½	½	0.88
96	S2496	14½	4.000	4.083	B	½	⅞	1½	½	1.08
120	S24120	14½	5.000	5.083	B	½	⅞	1½	½	2.60
144	S24144	14½	6.000	6.083	B	½	15/16	1⅝	17/32	2.28

* Recommended maximum bore with keyway and set screw.
** Check application with factory.
† Enlarged pitch diameter with special tooth form.

14½° P.A. Gears Will Not Operate With 20° P.A.

14½° Spur Gear Horsepower Ratings

(S) = Steel **(CI) = Cast Iron**

3 D.P. — 3" Face

No. Teeth	50 RPM		100 RPM		200 RPM		300 RPM		600 RPM		900 RPM		1200 RPM		1800 RPM	
	S	CI	S	CI	S	CI	S	CI	S	CI	S	CI	S	CI	S	CI
12	6.14		11.37		19.8		26.3		39.14		46.74		51.78			
15	8.76		15.96		27.06		35.24		50.49		59.01					
18	11.37		20.38		33.75		43.2		60		68.93					
21	13.92		24.59		39.84		50.24		67.96							
24	16.32	9.67	28.53	16.84	45.16	26.76	56.19	33.3	74.34	44.05						
48	32.28	19.5	51.3	30.98	72.69	43.9	84.44	51.39								
72	45.01	27.06	66.98	40.29	88.62	53.32										
96	54.74	32.95	77.57	46.7	98.01	59.01										
120	62.89	37.74	85.79	51.48	104.88	62.93										

4 D.P. — 2" Face

No. Teeth	50 RPM		100 RPM		200 RPM		300 RPM		600 RPM		900 RPM		1200 RPM		1800 RPM	
	S	CI	S	CI	S	CI	S	CI	S	CI	S	CI	S	CI	S	CI
12	2.35		4.42		7.92		10.77		16.8		20.65		23.33		27	
16	3.81		6.85		11.92		15.82		23.6		28.18		31.23			
20	5.06		9.22		15.65		20.38		29.19		31.11					
24	6.27	3.77	11.25	6.75	18.64	11.19	23.86	14.32	33.14	19.88	38.17	22.84				
36	10.03	5.96	17.23	10.24	28.01	15.98	33.05	16.94	42.89	25.49						
48	12.94	7.82	21.44	12.95	31.91	19.28	38.12	23.02	47.31	28.58						
72		11.1		17.32		24.05		27.65								
96		13.78		20.5		27.12										
144		18		25		31										

5 D.P. — 1¾" Face

No. Teeth	50 RPM		100 RPM		200 RPM		300 RPM		600 RPM		900 RPM		1200 RPM		1800 RPM	
	S	CI	S	CI	S	CI	S	CI	S	CI	S	CI	S	CI	S	CI
12	1.32		2.54		4.63		6.4		10.33		12.98		14.9		17.48	
18	2.5		4.66		8.22		11		16.67		20.13		22.45			
24	3.64	2.16	6.55	3.95	11.18	6.73	14.62	8.79	21.09	12.69	24.74	14.88				
30	4.68	2.79	8.45	5.02	14	8.31	17.92	10.65	24.88	14.79	28.58	17				
45	7.59	4.32	12.2	7.43	19.03	11.59	23.41	14.27	30.38	18.52						
60		5.62		9.31		13.86		16.56		20.55						
80	11.96	7.25	19	11.54	26.92	16.35	31.28	18.99								
100		8.51		13.07		17.84										
120	16.23	9.74	24.16	14.49	31.95	19.18										
160		11.77		16.68		21.09										

Note: 1. Pitch line velocities exceeding 1000 feet per minute are not recommended. They should be used for interpolation purposes only.

2. Non-metallic gears are most commonly used for the driving pinion of a pair of gears, with mating gear made of Cast Iron or Steel, where pitch line velocities exceed 1000 FPM and are not subjected to shock loads.

14½° Spur Gear Horsepower Ratings

(S) = Steel **(CI) = Cast Iron**

6 D.P. — 1½" Face

No. Teeth	100 RPM		200 RPM		300 RPM		600 RPM		900 RPM		1200 RPM		1800 RPM	
	S	CI	S	CI	S	CI	S	CI	S	CI	S	CI	S	CI
12	1.54		2.83		3.97		6.57		8.4		9.78		11.69	
18	2.83		5.09		6.91		10.8		13.28		14.98		17.22	
24	4.02		7.02		9.32		13.86		16.56		18.35			
30	5.16		8.75		11.41		16.35		19.1					
36	6.26	3.77	10.37	6.24	13.28	7.98	18.44	11.09						
48	7.56	4.88	12.91	7.75	15.98	9.64	20.66	12.75						
84	12.86	7.6	17.62	11.02	20.51	12.96								
120	15.99	9.5	20.86	12.95										
180		12		15										

8 D.P. — 1¼" Face

No. Teeth	100 RPM		200 RPM		300 RPM		600 RPM		900 RPM		1200 RPM		1800 RPM	
	S	CI	S	CI	S	CI	S	CI	S	CI	S	CI	S	CI
12	0.72		1.37		1.95		3.32		4.36		5.21		6.38	
18	1.37		2.52		3.49		5.69		7.2		8.30		9.8	
24	1.98	1.18	3.59	2.13	4.81	2.86	7.55	4.48	9.25	5.49	10.48	6.22	12.08	7.17
36	3.02		5.13		6.73		9.85							
48	4.08	2.5	6.76	4.14	8.58	5.26	11.91	7.29						
60		2.98		4.79		5.98								
72		3.47		5.45		6.67								
96		4.4		6.49		7.75								
112		4.83		7.01										
120		5.05		7.22										
160		6.02		8.21										

10 D.P. — 1" Face

No. Teeth	100 RPM		200 RPM		300 RPM		600 RPM		900 RPM		1200 RPM		1800 RPM	
	S	CI	S	CI	S	CI	S	CI	S	CI	S	CI	S	CI
12	0.38		0.75		1.08		1.88		2.50		3.00		3.75	
18	0.72		1.33		1.87		3.15		4.07		4.76		5.75	
24	1.08		1.98		2.71		4.33		5.41		7.21		7.21	
28	1.24	0.80	2.24	1.44	3.06	1.94	4.83	3.03	5.98	3.71	6.79	4.85	7.85	
48	2.26	1.31	3.77	2.23	4.94	2.91	7.13	4.2	8.23	4.92				
60	2.68	1.61	4.45	2.66	5.65	3.41	7.84	4.73	9.04	5.43				
72		1.88		3.02		3.80		5.16						
96		2.37		3.65		4.46		5.73						
120		2.80		4.17		4.98		6.18						
140		3.12		4.52		5.33								
180		3.63		5.04		5.81								
200		3.88		5.29		6.02								

Note: 1. Pitch line velocities exceeding 1000 feet per minute are not recommended. They should be used for interpolation purposes only.

2. Non-metallic gears are most commonly used for the driving pinion of a pair of gears, with mating gear made of Cast Iron or Steel, where pitch line velocities exceed 1000 FPM and are not subjected to shock loads.

14½° Spur Gear Horsepower Ratings

12 D.P. — ¾" Face

No. Teeth	100 RPM		200 RPM		300 RPM		600 RPM		900 RPM		1200 RPM		1800 RPM	
	S	CI	S	CI	S	CI	S	CI	S	CI	S	CI	S	CI
12	0.21		0.39		0.55		0.99		1.33		1.64		2.09	
18	0.38		0.71		1.01		1.73		2.28		2.70		3.32	
24	0.56		1.05		1.43		2.37		3.01		3.50		4.17	
36	0.88	0.53	1.57	0.95	2.13	1.28	3.33	2.01	4.09	2.46	4.62	2.46	5.31	3.21
48	1.16	0.70	2.02	1.22	2.70	1.62	3.99	2.41	4.76	2.88	4.76	3.19		
60	1.46	0.87	2.44	1.47	3.19	1.91	4.61	2.74	5.32	3.21				
72	1.71	1.04	2.84	1.72	3.60	2.18	5.00	3.03	5.76	3.49				
96		1.30		2.06		2.56		3.39						
120		1.54		2.37		2.90		3.68						
200		2.19		3.08		3.56								

16 D.P. — ½" Face

No. Teeth	100 RPM		200 RPM		300 RPM		600 RPM		900 RPM		1200 RPM		1800 RPM	
	S	CI	S	CI	S	CI	S	CI	S	CI	S	CI	S	CI
12	0.08		0.14		0.21		0.40		0.53		0.66		0.87	
18	0.14		0.27		0.39		0.70		0.94		1.14		1.44	
24	0.21		0.39		0.56		0.96		1.26		1.50		1.84	
36	0.32	0.14	0.60	0.27	0.82	0.37	1.35	0.60	1.71	0.68	1.97	0.87	2.33	1.03
48	0.45		0.82		1.10		1.72		2.11		2.39		2.75	
60		0.34		0.60		0.80		1.20		1.44		1.60		
72		0.40		0.69		0.91		1.33		1.57				
80	0.76	0.45	1.26	0.75	1.65	0.99	2.38	1.43	2.75	1.64				
120		0.63		1.00		1.25		1.68						
160		0.78		1.21		1.48		1.78						
200		0.93		1.34		1.60		1.78						

20 D.P. — ⅜" Face

No. Teeth	100 RPM		200 RPM		300 RPM		600 RPM		900 RPM		1200 RPM		1800 RPM	
	S	CI	S	CI	S	CI	S	CI	S	CI	S	CI	S	CI
12	0.05		0.07		0.10		0.19		0.27		0.33		0.46	
18	0.07		0.13		0.19		0.35		0.48		0.59		0.76	
24	0.11		0.20		0.29		0.51		0.68		0.81		1.02	
48	0.22	0.14	0.43	0.26	0.58	0.35	0.93	0.56	1.16	0.70	1.34	0.81	1.55	0.94
60	0.28		0.50		0.67		1.06		1.29		1.47		1.69	
80		0.22		0.39		0.52		0.76		0.91		1.01		
96	0.46	0.26	0.76		0.99		1.44		1.66		1.70			
120		0.32		0.53		0.66		0.92		1.06				
160		0.40		0.64		0.79		1.05		1.16				
200		0.47		0.73		0.89		1.08		1.14				

24 D.P. — ¼" Face

No. Teeth	100 RPM		200 RPM		300 RPM		600 RPM		900 RPM		1200 RPM	
	S	CI	S	CI	S	CI	S	CI	S	CI	S	CI
12	0.017		0.033		0.049		0.092		0.131		0.165	
18	0.030		0.060		0.090		0.170		0.230		0.290	
24	0.047		0.091		0.132		0.236		0.321		0.391	
36	0.080		0.150		0.210		0.360		0.470		0.550	
48	0.105		0.197		0.275		0.455		0.583		0.679	
60	0.130		0.240		0.330		0.530		0.670		0.760	
96	0.210		0.360		0.480		0.710		0.850		0.940	
144	0.291		0.482		0.617		0.857		0.984			

Note: 1. Pitch line velocities exceeding 1000 feet per minute are not recommended. They should be used for interpolation purposes only.

2. Non-metallic gears are most commonly used for the driving pinion of a pair of gears, with mating gear made of Cast Iron or Steel, where pitch line velocities exceed 1000 FPM and are not subjected to shock loads.

4 DP
3½" Face

Steel Stock Spur Gears
20°Pressure Angle

Type B
Plain With Hub
All Steel

Type B_1
Web
All Steel

Type B_2
Web With
Lighten Holes
All Steel

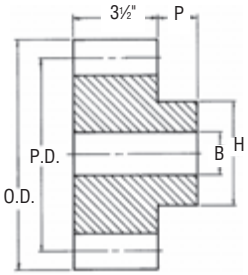

Type B

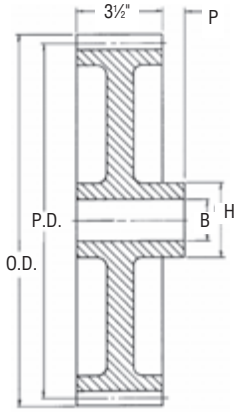

Type B_1, B_2

Steel

No. Teeth	Catalog Number	Pressure Angle (Deg.)	Diameter Pitch	Diameter Outside	Type	Bore (Inches) Stock	Bore (Inches) Max.*	Hub (Inches) Diameter	Hub (Inches) Proj.	Weight Lbs. (App.)
12	TS412	20	3.000	3.500	B	1⅛	1 5/16	2 17/64	⅞	6.8
14	TS414	20	3.500	4.000	B	1⅛	1¾	2 49/64	⅞	9.8
15	TS415	20	3.750	4.250	B	1⅛	1⅞	3 1/64	⅞	11.5
16	TS416	20	4.000	4.500	B	1⅛	2⅛	3 17/64	⅞	13.3
18	TS418	20	4.500	5.000	B	1⅛	2⅜	3 49/64	⅞	17.3
20	TS420	20	5.000	5.500	B	1⅛	2¾	4 17/64	⅞	21.8
22	TS422	20	5.500	6.000	B	1⅛	3	4 49/64	⅞	26.7
24	TS424	20	6.000	6.500	B	1⅛	3⅛	5	1¼	33.7
28	TS428	20	7.000	7.500	B	1⅛	3⅛	5	1¼	43.8
30	TS430	20	7.500	8.000	B	1⅛	3⅛	5	1¼	49.4
32	TS432	20	8.000	8.500	B	1¼	3⅛	5	1½	56.8
36	TS436	20	9.000	9.500	B	1¼	3⅛	5	1½	70.0
40	TS440	20	10.000	10.500	B	1¼	3⅛	5⅛	1½	85.2
44	TS444	20	11.000	11.500	B	1¼	3⅛	5⅛	1½	101.6
48	TS448	20	12.000	12.500	B	1¼	3⅛	5⅛	1½	119.5
56	TS456	20	14.000	14.500	B_1	1¼	3¼	5½	1½	96.9
60	TS460	20	15.000	15.500	B_2	1¼	3¼	5½	1½	88.1
64	TS464	20	16.000	16.500	B_2	1¼	3¼	5½	1½	86.9
72	TS472	20	18.000	18.500	B_2	1¼	3¼	5½	1½	86.5
80	TS480	20	20.000	20.500	B_2	1¼	3¼	5½	1½	90.9

* Recommended maximum bore with keyway and set screw.

20° P.A. Gears Will Not Operate With 14½° P.A.

Steel Stock Spur Gears

20°Pressure Angle

5 DP

2½" Face

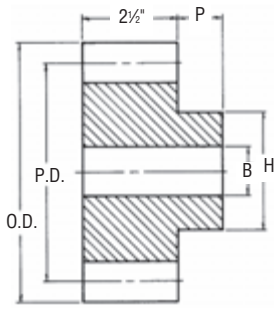

Type B

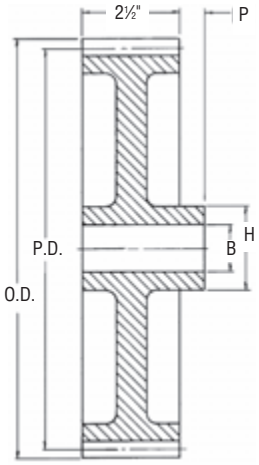

Type B_2

Type B
Plain With Hub
All Steel

Type B_2
Web With Lighten Holes
All Steel

Steel

No. Teeth	Catalog Number	Pressure Angle (Deg.)	Diameter		Type	Bore (Inches)		Hub (Inches)		Weight Lbs. (App.)
			Pitch	Outside		Stock	Max.*	Diameter	Proj.	
12	TS512	20	2.400	2.800	B	1⅛	1⅛	1 25/32	⅞	2.9
14	TS514	20	2.800	3.200	B	1⅛	1 5/16	2 3/16	⅞	4.3
15	TS515	20	3.000	3.400	B	1⅛	1 7/16	2⅜	⅞	5.2
16	TS516	20	3.200	3.600	B	1⅛	1⅝	2 19/32	⅞	6.1
18	TS518	20	3.600	4.000	B	1⅛	1⅞	3	⅞	8.0
20	TS520	20	4.000	4.400	B	1⅛	2¼	3⅜	⅞	10.2
24	TS524	20	4.800	5.200	B	1⅛	2⅜	3¾	1¼	15.7
25	TS525	20	5.000	5.400	B	1⅛	2⅜	3¾	1¼	20.3
28	TS528	20	5.600	6.000	B	1⅛	2⅜	3¾	1¼	22.9
30	TS530	20	6.000	6.400	B	1⅛	2⅜	3¾	1¼	23.9
35	TS535	20	7.000	7.400	B	1¼	2⅜	3¾	1¼	29.9
40	TS540	20	8.000	8.400	B	1¼	2⅜	3¾	1¼	38.2
45	TS545	20	9.000	9.400	B	1¼	2⅜	3¾	1¼	47.7
50	TS550	20	10.000	10.400	B	1¼	2 13/16	4⅝	1¼	60.3
60	TS560	20	12.000	12.400	B	1¼	2 13/16	4⅝	1¼	84.7
70	TS570	20	14.000	14.400	B_2	1 3/16	3⅛	5¼	1¼	51.6
80	TS580	20	16.000	16.400	B_2	1 3/16	3⅛	5¼	1¼	55.8
90	TS590	20	18.000	18.400	B_2	1 3/16	3⅛	5¼	1¼	59.7
100	TS5100	20	20.000	20.400	B_2	1 5/16	3¼	5¾	1½	69.2
110	TS5110	20	22.000	22.400	B_2	1 5/16	3¼	5¾	1½	72.3
120	TS5120	20	24.000	24.400	B_2	1 5/16	3½	6¼	1½	80.2

* Recommended maximum bore with keyway and set screw.

20° P.A. Gears Will Not Operate With 14½° P.A.

6 DP
2" Face

Steel Stock Spur Gears
20°Pressure Angle

Type B
Plain With Hub
All Steel

Type B_2
Web With Lighten Holes
All Steel

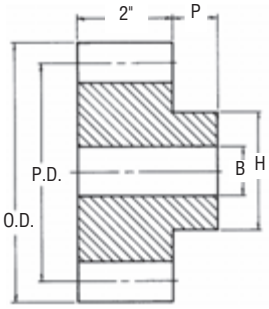

Type B

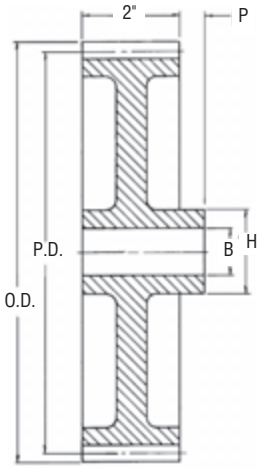

Type B_2

Steel

No. Teeth	Catalog Number	Pressure Angle (Deg.)	Diameter Pitch	Diameter Outside	Type	Bore (Inches) Stock	Bore (Inches) Max.*	Hub (Inches) Diameter	Hub (Inches) Proj.	Weight Lbs. (App.)
11	TS611†	20	2.000	2.333	B	1	1	1½	⅞	1.6
12	TS612	20	2.000	2.333	B	1	1	1½	⅞	1.6
14	TS614	20	2.333	2.666	B	1	1	1 13/16	⅞	2.4
15	TS615	20	2.500	2.833	B	1	1¼	2	⅞	2.9
16	TS616	20	2.666	3.000	B	1	1 5/16	2⅛	⅞	3.4
18	TS618	20	3.000	3.333	B	1	1½	2½	⅞	4.6
21	TS621	20	3.500	3.833	B	1	1⅞	3	⅞	6.6
24	TS624	20	4.000	4.333	B	1⅛	1⅞	3	⅞	8.1
27	TS627	20	4.500	4.833	B	1⅛	2⅛	3½	⅞	10.6
30	TS630	20	5.000	5.333	B	1⅛	2½	4	⅞	13.4
33	TS633	20	5.500	5.833	B	1⅛	2½	4	1½	17.8
36	TS636	20	6.000	6.333	B	1⅛	2½	4	1½	20.4
42	TS642	20	7.000	7.333	B	1⅛	2½	4	1½	26.2
48	TS648	20	8.000	8.333	B	1⅛	2½	4	1½	32.8
54	TS654	20	9.000	9.333	B	1⅛	2½	4	1½	40.4
60	TS660	20	10.000	10.333	B	1¼	2 11/16	4⅝	1½	50.0
64	TS664	20	10.666	11.000	B	1¼	2 11/16	4⅝	1½	56.5
66	TS666	20	11.000	11.333	B	1¼	2 11/16	4⅝	1½	59.8
72	TS672	20	12.000	12.333	B	1¼	2 11/16	4⅝	1½	70.0
84	TS684	20	14.000	14.333	B_2	1¼	2 13/16	5	1½	42.8
96	TS696	20	16.000	16.333	B_2	1¼	2 13/16	5	1½	46.0
108	TS6108	20	18.000	18.333	B_2	1¼	2 13/16	5	1½	48.8
120	TS6120	20	20.000	20.333	B_2	1¼	2 13/16	5	1½	51.3

* Recommended maximum bore with keyway and set screw.
† Enlarged pitch diameter with special tooth form.

Bored-to-Size

No. Teeth	Catalog Number	Pressure Angle (Deg.)	Diameter Pitch	Diameter Outside	Type	Bore (Inches) Stock	Bore (Inches) Keyway	Set Screw	Hub (Inches) Diameter	Hub (Inches) Proj.	Weight Lbs. (App.)
12	TS612BS 1	20	2.000	2.333	B	1	¼ × ⅛	(1) 1/4-20 @90	1½	⅞	1.60
14	TS614BS 1	20	2.333	2.667	B	1	¼ × ⅛	(1) 5/16-18 @90	1 13/16	⅞	2.40
14	TS614BS 1-1/8	20	2.333	2.667	B	1⅛	¼ × ⅛	(1) 5/16-18 @90	1 13/16	⅞	2.40
15	TS615BS 1	20	2.500	2.833	B	1	¼ × ⅛	(1) 5/16-18 @90	2	⅞	2.90
15	TS615BS 1-1/8	20	2.500	2.833	B	1⅛	¼ × ⅛	(1) 5/16-18 @90	2	⅞	2.90
15	TS615BS 1-3/16	20	2.500	2.833	B	1 3/16	¼ × ⅛	(1) 5/16-18 @90	2	⅞	2.90
15	TS615BS 1-1/4	20	2.500	2.833	B	1¼	¼ × ⅛	(1) 5/16-18 @90	2	⅞	2.90
16	TS616BS 1	20	2.667	3.000	B	1	¼ × ⅛	(1) 5/16-18 @90	2⅛	⅞	3.40
16	TS616BS 1-1/8	20	2.667	3.000	B	1⅛	¼ × ⅛	(1) 5/16-18 @90	2⅛	⅞	3.40
16	TS616BS 1-3/16	20	2.667	3.000	B	1 3/16	¼ × ⅛	(1) 5/16-18 @90	2⅛	⅞	3.40
16	TS616BS 1-1/4	20	2.667	3.000	B	1¼	¼ × ⅛	(1) 5/16-18 @90	2⅛	⅞	3.40
18	TS618BS 1	20	3.000	3.333	B	1	¼ × ⅛	(1) 5/16-18 @90	2½	⅞	4.60
18	TS618BS 1-1/8	20	3.000	3.333	B	1⅛	¼ × ⅛	(1) 5/16-18 @90	2½	⅞	4.60
18	TS618BS 1-3/16	20	3.000	3.333	B	1 3/16	¼ × ⅛	(1) 5/16-18 @90	2½	⅞	4.60
18	TS618BS 1-1/4	20	3.000	3.333	B	1¼	¼ × ⅛	(1) 5/16-18 @90	3	⅞	4.60
21	TS621BS 1	20	3.500	3.833	B	1	¼ × ⅛	(1) 5/16-18 @90	3	⅞	6.60
21	TS621BS 1-1/8	20	3.500	3.833	B	1⅛	¼ × ⅛	(1) 5/16-18 @90	3	⅞	6.60
21	TS621BS 1-3/16	20	3.500	3.833	B	1 3/16	¼ × ⅛	(1) 5/16-18 @90	3	⅞	6.60
21	TS621BS 1-1/4	20	3.500	3.833	B	1¼	¼ × ⅛	(1) 5/16-18 @90	3	⅞	6.60

20° P.A. Gears Will Not Operate With 14½° P.A.

Steel & Cast Stock Spur Gears

20°Pressure Angle

8 DP

1½" Face

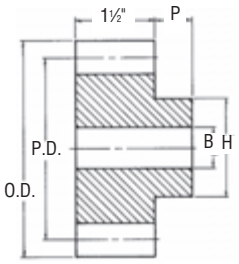

Type B

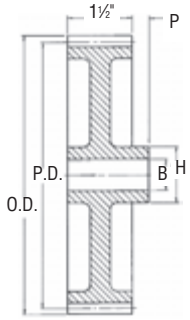

Type B_2, B_3

Type B
Plain With Hub All Steel

Type B_3
Spoke Style Cast

Steel

No. Teeth	Catalog Number	Pressure Angle (Deg.)	Diameter Pitch	Diameter Outside	Type	Bore (Inches) Stock	Bore (Inches) Max.*	Hub (Inches) Diameter	Hub (Inches) Proj.	Weight Lbs. (App.)
12	TS812	20	1.500	1.750	B	¾	¾	1⅛	¾	0.7
14	TS814	20	1.750	2.000	B	¾	13/16	1 5/16	¾	1.0
15	TS815	20	1.875	2.125	B	¾	⅞	1 7/16	¾	1.2
16	TS816	20	2.000	2.250	B	⅞	15/16	1 9/16	⅞	1.4
18	TS818	20	2.250	2.500	B	⅞	1⅛	1 13/16	⅞	1.9
19	TS819	20	2.375	2.625	B	⅞	1¼	2	⅞	2.3
20	TS820	20	2.500	2.750	B	⅞	1 5/16	2 1/16	⅞	2.5
22	TS822	20	2.750	3.000	B	⅞	1½	2 5/16	⅞	3.2
24	TS824	20	3.000	3.250	B	⅞	1⅝	2 9/16	⅞	3.9
26	TS826	20	3.250	3.500	B	⅞	1¾	2¾	⅞	4.6
28	TS828	20	3.500	3.750	B	⅞	1¾	2¾	⅞	5.2
30	TS830	20	3.750	4.000	B	1	1¾	2¾	⅞	5.6
32	TS832	20	4.000	4.250	B	1	1⅞	3¼	⅞	6.6
36	TS836	20	4.500	4.750	B	1	2⅛	3½	⅞	8.6
40	TS840	20	5.000	5.250	B	1	2⅛	3½	⅞	10.2
42	TS842	20	5.250	5.500	B	1	2⅛	3½	1	11.4
44	TS844	20	5.500	5.750	B	1	2⅛	3½	1	12.3
48	TS848	20	6.000	6.250	B	1	2⅛	3½	1	14.2

Cast

No. Teeth	Catalog Number	Pressure Angle (Deg.)	Diameter Pitch	Diameter Outside	Type	Bore (Inches) Stock	Bore (Inches) Max.*	Hub (Inches) Diameter	Hub (Inches) Proj.	Weight Lbs. (App.)
52	TC852	20	6.500	6.750	B	1	1⅞	3	1	11.9
56	TC856	20	7.000	7.250	B	1	1⅞	3	1	13.0
60	TC860	20	7.500	7.750	B_2	1	1⅞	3	1	12.0
64	TC864	20	8.000	8.250	B_3	1	1⅞	3	1	12.1
72	TC872	20	9.000	9.250	B_3	1	2 1/16	3¼	1	14.4
80	TC880	20	10.000	10.250	B_3	1⅛	2 1/16	3¼	1¼	17.0
88	TC888	20	11.000	11.250	B_3	1⅛	2 1/16	3¼	1¼	19.0
96	TC896	20	12.000	12.250	B_3	1⅛	2⅛	3½	1¼	23.7
112	TC8112	20	14.000	14.250	B_3	1⅛	2⅛	3½	1¼	25.0
120	TC8120	20	15.000	15.250	B_3	1⅛	2⅛	3½	1¼	25.8
128	TC8128	20	16.000	16.250	B_3	1⅛	2⅛	3½	1¼	28.0
144	TC8144	20	18.000	18.250	B_3	1⅛	2¼	3¾	1¼	32.0
160	TC8160	20	20.000	20.250	B_3	1¼	2¼	3¾	1½	34.8

Bored-to-Size

No. Teeth	Catalog Number	Pressure Angle (Deg.)	Diameter Pitch	Diameter Outside	Type	Bore (Inches) Stock	Bore (Inches) Keyway	Set Screw	Hub (Inches) Diameter	Hub (Inches) Proj.	Weight Lbs. (App.)
12	TS812BS 3/4	20	1.500	1.750	B	¾	3/16 × 3/32	(1) 10-24 @ 90	1⅛	¾	0.70
14	TS814BS 3/4	20	1.750	2.000	B	¾	3/16 × 3/32	(1) 1/4-20 @ 90	1 5/16	¾	1.00
15	TS815BS 3/4	20	1.875	2.125	B	¾	3/16 × 3/32	(1) 1/4-20 @ 90	1 7/16	¾	1.20
15	TS815BS 7/8	20	1.875	2.125	B	⅞	3/16 × 3/32	(1) 1/4-20 @ 90	1 7/16	¾	1.20
16	TS816BS 7/8	20	2.000	2.250	B	⅞	3/16 × 3/32	(1) 1/4-20 @ 90	1 9/16	⅞	1.40
16	TS816BS 1	20	2.000	2.250	B	1	¼ × ⅛	(1) 5/16-18 @ 90	1 9/16	⅞	1.40
18	TS818BS 7/8	20	2.250	2.500	B	⅞	3/16 × 3/32	(1) 1/4-20 @ 90	1 13/16	⅞	1.90
18	TS818BS 1	20	2.250	2.500	B	1	¼ × ⅛	(1) 5/16-18 @ 90	1 13/16	⅞	1.90
18	TS818BS 1-1/8	20	2.250	2.500	B	1⅛	¼ × ⅛	(1) 5/16-18 @ 90	1 13/16	⅞	1.90
20	TS820BS 7/8	20	2.500	2.750	B	⅞	3/16 × 3/32	(1) 1/4-20 @ 90	2 1/16	⅞	2.50
20	TS820BS 1	20	2.500	2.750	B	1	¼ × ⅛	(1) 5/16-18 @ 90	2 1/16	⅞	2.50
20	TS820BS 1-1/8	20	2.500	2.750	B	1⅛	¼ × ⅛	(1) 5/16-18 @ 90	2 1/16	⅞	2.50
22	TS822BS 7/8	20	2.750	3.000	B	⅞	3/16 × 3/32	(1) 1/4-20 @ 90	2 5/16	⅞	3.20
22	TS822BS 1	20	2.750	3.000	B	1	¼ × ⅛	(1) 5/16-18 @ 90	2 5/16	⅞	3.20
22	TS822BS 1-1/8	20	2.750	3.000	B	1⅛	¼ × ⅛	(1) 5/16-18 @ 90	2 5/16	⅞	3.20
24	TS824BS 7/8	20	3.000	3.250	B	⅞	3/16 × 3/32	(1) 1/4-20 @ 90	2 9/16	⅞	3.90
24	TS824BS 1	20	3.000	3.250	B	1	¼ × ⅛	(1) 5/16-18 @ 90	2 9/16	⅞	3.90
24	TS824BS 1-1/8	20	3.000	3.250	B	1⅛	¼ × ⅛	(1) 5/16-18 @ 90	2 9/16	⅞	3.90

* Recommended maximum bore with keyway and set screw.

20° P.A. Gears Will Not Operate With 14½° P.A.

10 DP
1¼" Face

Steel & Cast Stock Spur Gears
20°Pressure Angle

Type B
Plain With Hub
All Steel

Type B_3
Spoke Style
Cast

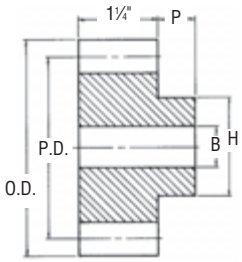

Type B

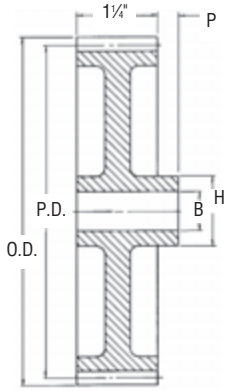

Type B_3

Steel

No. Teeth	Catalog Number	Pressure Angle (Deg.)	Diameter Pitch	Diameter Outside	Type	Bore (Inches) Stock	Bore (Inches) Max.*	Hub (Inches) Diameter	Hub (Inches) Proj.	Weight Lbs. (App.)
12	TS1012	20	1.200	1.400	B	⅝	⅝	29/32	⅝	0.4
14	TS1014	20	1.400	1.600	B	⅝	⅝	1 7/64	⅝	0.6
15	TS1015	20	1.500	1.700	B	¾	¾	1 7/32	⅝	0.6
16	TS1016	20	1.600	1.800	B	¾	¾	1 5/16	⅝	0.7
18	TS1018	20	1.800	2.000	B	¾	13/16	1 11/32	⅝	0.9
20	TS1020	20	2.000	2.200	B	⅞	⅞	1 39/64	⅝	1.2
22	TS1022	20	2.200	2.400	B	⅞	1 1/16	1 13/16	⅝	1.5
24	TS1024	20	2.400	2.600	B	⅞	1 3/16	2 1/64	⅝	1.8
25	TS1025	20	2.500	2.700	B	⅞	1¼	2 7/64	⅝	2.0
26	TS1026	20	2.600	2.800	B	⅞	1¼	2⅛	⅝	2.2
28	TS1028	20	2.800	3.000	B	⅞	1 5/16	2 13/32	⅝	2.7
30	TS1030	20	3.000	3.200	B	⅞	1⅜	2½	⅞	3.4
32	TS1032	20	3.200	3.400	B	⅞	1⅜	2½	⅞	3.7
35	TS1035	20	3.500	3.700	B	1	1⅜	2½	⅞	4.2
36	TS1036	20	3.600	3.800	B	1	1⅜	2½	⅞	4.3
40	TS1040	20	4.000	4.200	B	1	2⅛	3½	⅞	6.4
45	TS1045	20	4.500	4.700	B	1	2⅛	3½	⅞	7.5
48	TS1048	20	4.800	5.000	B	1	2⅜	3¾	⅞	8.7
50	TS1050	20	5.000	5.200	B	1	2½	4	⅞	9.6
55	TS1055	20	5.500	5.700	B	1	2½	4	1	11.5
60	TS1060	20	6.000	6.200	B	1	2½	4	1	13.1

Cast

No. Teeth	Catalog Number	Pressure Angle (Deg.)	Diameter Pitch	Diameter Outside	Type	Bore (Inches) Stock	Bore (Inches) Max.*	Hub (Inches) Diameter	Hub (Inches) Proj.	Weight Lbs. (App.)
70	TC1070	20	7.000	7.200	B_3	1	1 11/16	2¾	1	8.2
80	TC1080	20	8.000	8.200	B_3	1	1 11/16	2¾	1	11.2
90	TC1090	20	9.000	9.200	B_3	1	1 13/16	3	1	11.7
100	TC10100	20	10.000	10.200	B_3	1⅛	1 13/16	3	1⅛	12.2

* Recommended maximum bore with keyway and set screw.

Bored-to-Size

No. Teeth	Catalog Number	Pressure Angle (Deg.)	Diameter Pitch	Diameter Outside	Type	Bore (Inches) Stock	Bore (Inches) Keyway	Set Screw	Hub (Inches) Diameter	Hub (Inches) Proj.	Weight Lbs. (App.)
12	TS1012BS 5/8	20	1.200	1.400	B	⅝	3/16 × 3/32	(1) 10-24 @ 90	29/32	⅝	0.40
14	TS1014BS 5/8	20	1.400	1.600	B	⅝	3/16 × 3/32	(1) 1/4-20 @ 90	1 7/64	⅝	0.60
15	TS1015BS 3/4	20	1.500	1.700	B	¾	3/16 × 3/32	(1) 1/4-20 @ 90	1 7/32	⅝	0.60
16	TS1016BS 3/4	20	1.600	1.800	B	¾	3/16 × 3/32	(1) 1/4-20 @ 90	1 5/16	⅝	0.70
18	TS1018BS 3/4	20	1.800	2.000	B	¾	3/16 × 3/32	(1) 1/4-20 @ 90	1 11/32	⅝	0.88
18	TS1018BS 7/8	20	1.800	2.000	B	⅞	3/16 × 3/32	(1) 1/4-20 @ 90	1 11/32	⅝	0.90
20	TS1020BS 7/8	20	2.000	2.200	B	⅞	3/16 × 3/32	(1) 1/4-20 @ 90	1 39/64	⅝	1.20
20	TS1020BS 1	20	2.000	2.200	B	1	¼ × ⅛	(1) 5/16-18 @ 90	1 39/64	⅝	1.20
24	TS1024BS 7/8	20	2.400	2.600	B	⅞	3/16 × 3/32	(1) 1/4-20 @ 90	1 13/16	⅝	1.50
24	TS1024BS 1	20	2.400	2.600	B	1	¼ × ⅛	(1) 5/16-18 @ 90	1 13/16	⅝	1.50
25	TS1025BS 7/8	20	2.500	2.700	B	⅞	3/16 × 3/32	(1) 1/4-20 @ 90	2 7/64	⅝	2.00
25	TS1025BS 1	20	2.500	2.700	B	1	¼ × ⅛	(1) 5/16-18 @ 90	2 7/64	⅝	2.00
28	TS1028BS 7/8	20	2.800	3.000	B	⅞	3/16 × 3/32	(1) 1/4-20 @ 90	2 13/32	⅝	2.70
28	TS1028BS 1	20	2.800	3.000	B	1	¼ × ⅛	(1) 5/16-18 @ 90	2 13/32	⅝	2.70

20° P.A. Gears Will Not Operate With 14½° P.A.

Steel& Cast Stock Spur Gears

20°Pressure Angle

12 DP

1" Face

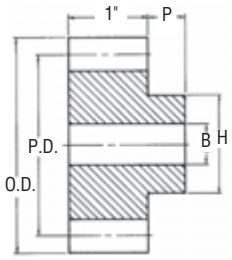

Type B

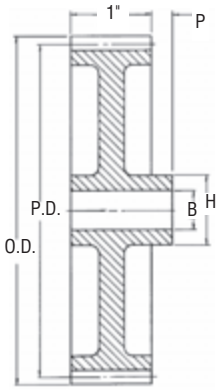

Type B_3

Type B
Plain With Hub

Type B_3
Spoke Style

Steel

No. Teeth	Catalog Number	Pressure Angle (Deg.)	Diameter Pitch	Diameter Outside	Type	Bore (Inches) Stock	Bore (Inches) Max.*	Hub (Inches) Diameter	Hub (Inches) Proj.	Weight Lbs. (App.)
12	TS1212	20	1.000	1.167	B	½	½	¾	⅝	0.21
13	TS1213	20	1.083	1.250	B	⅝	⅝	13/16	⅝	0.21
14	TS1214	20	1.167	1.333	B	⅝	⅝	29/32	⅝	0.28
15	TS1215	20	1.250	1.417	B	⅝	⅝	63/64	⅝	0.34
16	TS1216	20	1.333	1.500	B	⅝	⅝	1 1/16	⅝	0.41
18	TS1218	20	1.500	1.667	B	¾	¾	1¼	⅝	0.51
19	TS1219	20	1.583	1.750	B	¾	¾	1 5/16	⅝	0.59
20	TS1220	20	1.667	1.833	B	¾	¾	1 5/16	⅝	0.65
21	TS1221	20	1.750	1.917	B	¾	13/16	1 25/64	⅝	0.75
22	TS1222	20	1.833	2.000	B	¾	⅞	1 9/16	⅝	0.88
24	TS1224	20	2.000	2.166	B	¾	15/16	1 41/64	⅝	1.06
25	TS1225	20	2.083	2.250	B	¾	1 1/16	1 13/16	⅝	1.22
26	TS1226	20	2.167	2.333	B	¾	1⅛	1⅞	⅝	1.33
28	TS1228	20	2.333	2.500	B	¾	1¼	2 1/16	⅝	1.60
30	TS1230	20	2.500	2.667	B	¾	1 5/16	2 5/32	⅝	1.83
32	TS1232	20	2.667	2.833	B	¾	1 5/16	2¼	⅝	2.08
36	TS1236	20	3.000	3.167	B	¾	1⅜	2½	⅞	2.98
42	TS1242	20	3.500	3.666	B	¾	1⅜	2½	⅞	3.71
48	TS1248	20	4.000	4.166	B	⅞	1⅞	3	⅞	4.99
54	TS1254	20	4.500	4.666	B	⅞	2⅛	3½	⅞	6.57
60	TS1260	20	5.000	5.166	B	⅞	2⅛	3½	⅞	7.63
66	TS1266	20	5.500	5.666	B	⅞	2⅛	3½	⅞	8.80
72	TS1272	20	6.000	6.166	B	⅞	2⅛	3½	⅞	10.08

Cast

No. Teeth	Catalog Number	Pressure Angle (Deg.)	Diameter Pitch	Diameter Outside	Type	Bore (Inches) Stock	Bore (Inches) Max.*	Hub (Inches) Diameter	Hub (Inches) Proj.	Weight Lbs. (App.)
84	TC1284	20	7.000	7.166	B_3	⅞	1 7/16	2½	⅞	5.9
96	TC1296	20	8.000	8.166	B_3	⅞	1 7/16	2½	⅞	7.0
108	TC12108	20	9.000	9.166	B_3	⅞	1 7/16	2½	⅞	7.6
120	TC12120	20	10.000	10.166	B_3	1	1 7/16	2½	⅞	10.3
144	TC12144	20	12.000	12.166	B_3	1	1 11/16	2¾	1	10.4

Bored-to-Size

No. Teeth	Catalog Number	Pressure Angle (Deg.)	Diameter Pitch	Diameter Outside	Type	Bore (Inches) Stock	Bore (Inches) Keyway	Set Screw	Hub (Inches) Diameter	Hub (Inches) Proj.	Weight Lbs. (App.)
12	TS1212BS 1/2	20	1.000	1.167	B	½	NONE	(1) 10-24	¾	⅝	0.21
13	TS1213BS 5/8	20	1.083	1.250	B	⅝	NONE	(1) 1/4-20 @ 90	13/16	⅝	0.21
14	TS1214BS 5/8	20	1.167	1.333	B	⅝	3/16 × 3/32	(1) 10-24 @ 90	29/32	⅝	0.28
15	TS1215BS 5/8	20	1.250	1.417	B	⅝	3/16 × 3/32	(1) 10-24 @ 90	63/64	⅝	0.34
16	TS1216BS 5/8	20	1.333	1.500	B	⅝	3/16 × 3/32	(1)1/4-20 @ 90	1 1/16	⅝	0.41
18	TS1218BS 3/4	20	1.500	1.667	B	¾	3/16 × 3/32	(1)1/4-20 @ 90	1¼	⅝	0.51
20	TS1220BS 3/4	20	1.667	1.833	B	¾	3/16 × 3/32	(1)1/4-20 @ 90	1 5/16	⅝	0.65
21	TS1221BS 3/4	20	1.750	1.917	B	¾	3/16 × 3/32	(1)1/4-20 @ 90	1 25/64	⅝	0.75
21	TS1221BS 7/8	20	1.750	1.917	B	⅞	3/16 × 3/32	(1)1/4-20 @ 90	1 25/64	⅝	0.75
24	TS1224BS 3/4	20	2.000	2.167	B	¾	3/16 × 3/32	(1)1/4-20 @ 90	1 41/64	⅝	1.06
24	TS1224BS 7/8	20	2.000	2.167	B	⅞	3/16 × 3/32	(1)1/4-20 @ 90	1 41/64	⅝	1.06
24	TS1224BS 1	20	2.000	2.167	B	1	¼ × ⅛	(1) 5/16-18 @ 90	1 41/64	⅝	1.06
28	TS1228BS 3/4	20	2.333	2.500	B	¾	3/16 × 3/32	(1)1/4-20 @ 90	2 1/16	⅝	1.60
28	TS1228BS 7/8	20	2.333	2.500	B	⅞	3/16 × 3/32	(1)1/4-20 @ 90	2 1/16	⅝	1.60
28	TS1228BS 1	20	2.333	2.500	B	1	¼ × ⅛	(1) 5/16-18 @ 90	2 1/16	⅝	1.60

* Recommended maximum bore with keyway and set screw.

20° P.A. Gears Will Not Operate With 14½° P.A.

16 DP
¾" Face

Steel & Cast Stock Spur Gears
20° Pressure Angle

Type B
Plain With Hub

Type B_3
Spoke Style

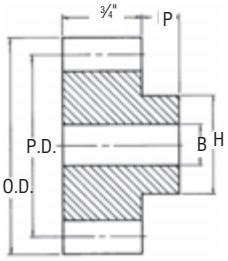

Type B

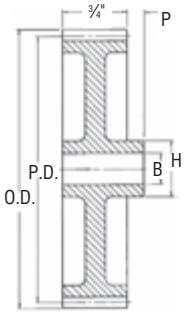

Type B_3

Steel

No. Teeth	Catalog Number	Pressure Angle (Deg.)	Diameter Pitch	Diameter Outside	Type	Bore (Inches) Stock	Bore (Inches) Max.*	Hub (Inches) Diameter	Hub (Inches) Proj.	Weight Lbs. (App.)
12	TS1612	20	0.750	0.875	B	⅜	⅜	9/16	½	0.09
13	TS1613	20	0.812	0.938	B	⅜	⅜	⅝	½	0.11
14	TS1614	20	0.875	1.000	B	⅜	⅜	11/16	½	0.14
15	TS1615	20	0.937	1.063	B	⅜	½	¾	½	0.17
16	TS1616	20	1.000	1.125	B	½	½	13/16	½	0.17
17	TS1617	20	1.062	1.188	B	½	½	⅞	½	0.20
18	TS1618	20	1.125	1.250	B	½	½	15/16	½	0.24
20	TS1620	20	1.250	1.375	B	⅝	⅝	1 1/16	½	0.28
21	TS1621	20	1.312	1.438	B	⅝	⅝	1⅛	½	0.32
22	TS1622	20	1.375	1.500	B	⅝	⅝	1 3/16	½	0.36
24	TS1624	20	1.500	1.625	B	⅝	¾	1 5/16	½	0.46
26	TS1626	20	1.625	1.750	B	⅝	⅞	1 7/16	½	0.56
28	TS1628	20	1.750	1.875	B	⅝	⅞	1½	½	0.65
30	TS1630	20	1.875	2.000	B	⅝	15/16	1⅝	½	0.77
32	TS1632	20	2.000	2.125	B	⅝	1	1¾	½	0.90
36	TS1636	20	2.250	2.375	B	⅝	1¼	2	½	1.18
40	TS1640	20	2.500	2.625	B	⅝	1¼	2	⅝	1.48
48	TS1648	20	3.000	3.125	B	⅝	1¼	2	⅝	1.94
56	TS1656	20	3.500	3.625	B	⅝	1⅜	2½	⅝	2.79
60	TS1660	20	3.750	3.875	B	⅝	1½	2¾	⅝	3.28
64	TS1664	20	4.000	4.125	B	¾	1½	2¾	¾	3.74
72	TS1672	20	4.500	4.625	B	¾	1⅞	3	¾	4.69
80	TS1680	20	5.000	5.125	B	¾	2⅛	3½	¾	6.03
84	TS1684	20	5.250	5.375	B	¾	2⅛	3½	¾	6.46
96	TS1696	20	6.000	6.125	B	¾	2⅛	3½	¾	7.86
104	TS16104	20	6.500	6.625	B	¾	2⅛	3½	¾	8.91

Cast

No. Teeth	Catalog Number	Pressure Angle (Deg.)	Diameter Pitch	Diameter Outside	Type	Bore (Inches) Stock	Bore (Inches) Max.*	Hub (Inches) Diameter	Hub (Inches) Proj.	Weight Lbs. (App.)
112	TC16112	20	7.000	7.125	B_3	¾	1 7/16	2½	¾	4.4
128	TC16128	20	8.000	8.125	B_3	¾	1 11/16	2¾	¾	5.5
144	TC16144	20	9.000	9.125	B_3	¾	1 11/16	2¾	¾	6.4
160	TC16160	20	10.000	10.125	B_3	⅞	1 11/16	2¾	¾	8.1
192	TC16192	20	12.000	12.125	B_3	⅞	1 13/16	3	1	10.1

* Recommended maximum bore with keyway and set screw.

20° P.A. Gears Will Not Operate With 14½° P.A.

Bored-to-Size

No. Teeth	Catalog Number	Pressure Angle (Deg.)	Diameter Pitch	Diameter Outside	Type	Bore (Inches) Stock	Bore (Inches) Keyway	Set Screw	Hub (Inches) Diameter	Hub (Inches) Proj.	Weight Lbs. (App.)
12	TS1612BS 3/8	20	0.750	0.875	B	⅜	NONE	(1) 8-32	9/16	½	0.09
14	TS1614BS 3/8	20	0.875	1.000	B	⅜	NONE	(1) 10-24	11/16	½	0.14
15	TS1615BS 3/8	20	0.937	1.063	B	⅜	NONE	(1) 10-24	¾	½	0.17
15	TS1615BS 1/2	20	0.937	1.063	B	½	NONE	(1) 10-24	¾	½	0.17
16	TS1616BS 1/2	20	1.000	1.125	B	½	NONE	(1) 10-24	13/16	½	0.17
18	TS1618BS 1/2	20	1.125	1.250	B	½	NONE	(1) 1/4-20	15/16	½	0.24
20	TS1620BS 5/8	20	1.250	1.375	B	⅝	3/16 × 3/32	(1) 1/4-20 @ 90	1 1/16	½	0.28
24	TS1624BS 5/8	20	1.500	1.625	B	⅝	3/16 × 3/32	(1) 1/4-20 @ 90	1 5/16	½	0.46
24	TS1624BS 3/4	20	1.500	1.625	B	¾	3/16 × 3/32	(1) 1/4-20 @ 90	1 5/16	½	0.46
28	TS1628BS 5/8	20	1.750	1.875	B	⅝	3/16 × 3/32	(1) 1/4-20 @ 90	1½	½	0.65
28	TS1628BS 3/4	20	1.750	1.875	B	¾	3/16 × 3/32	(1) 1/4-20 @ 90	1½	½	0.65
30	TS1630BS 5/8	20	1.875	2.000	B	⅝	3/16 × 3/32	(1) 1/4-20 @ 90	1⅝	½	0.77
30	TS1630BS 3/4	20	1.875	2.000	B	¾	3/16 × 3/32	(1) 1/4-20 @ 90	1⅝	½	0.77
30	TS1630BS 7/8	20	1.875	2.000	B	⅞	3/16 × 3/32	(1) 1/4-20 @ 90	1⅝	½	0.77
32	TS1632BS 5/8	20	2.000	2.125	B	⅝	3/16 × 3/32	(1) 1/4-20 @ 90	1¾	½	0.90
32	TS1632BS 3/4	20	2.000	2.125	B	¾	3/16 × 3/32	(1) 1/4-20 @ 90	1¾	½	0.90
32	TS1632BS 7/8	20	2.000	2.125	B	⅞	3/16 × 3/32	(1) 1/4-20 @ 90	1¾	½	0.90
32	TS1632BS 1	20	2.000	2.125	B	1	¼ × ⅛	(1) 5/16-18 @ 90	1¾	½	0.90

Steel Stock Spur Gears

20°Pressure Angle

20 DP

½" Face

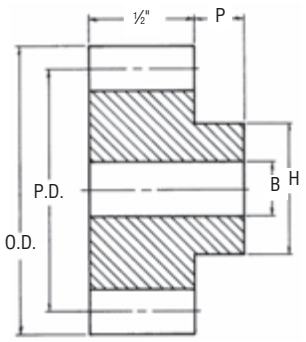

Type B

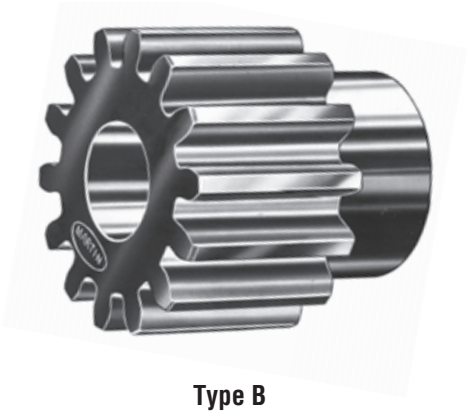

Type B
Plain With Hub

Steel

No. Teeth	Catalog Number	Pressure Angle (Deg.)	Diameter Pitch	Diameter Outside	Type	Bore (Inches) Stock	Bore (Inches) Max.*	Hub (Inches) Diameter	Hub (Inches) Proj.	Weight Lbs. (App.)
12	TS2012	20	0.600	0.700	B	5/16	5/16	15/32	7/16	0.04
14	TS2014	20	0.700	0.800	B	5/16	5/16	35/64	7/16	0.06
15	TS2015	20	0.750	0.850	B	3/8	3/8	39/64	7/16	0.07
16	TS2016	20	0.800	0.900	B	3/8	3/8	21/32	7/16	0.08
18	TS2018	20	0.900	1.000	B	3/8	3/8	3/4	7/16	0.12
20	TS2020	20	1.000	1.100	B	1/2	1/2	55/64	7/16	0.13
21	TS2021	20	1.050	1.150	B	1/2	1/2	7/8	7/16	0.15
22	TS2022	20	1.100	1.200	B	1/2	1/2	31/32	7/16	0.17
24	TS2024	20	1.200	1.300	B	1/2	9/16	1 1/16	7/16	0.22
25	TS2025	20	1.250	1.350	B	1/2	5/8	1 7/64	7/16	0.24
28	TS2028	20	1.400	1.500	B	1/2	11/16	1 17/64	7/16	0.32
30	TS2030	20	1.500	1.600	B	1/2	13/16	1 23/64	7/16	0.38
32	TS2032	20	1.600	1.700	B	1/2	7/8	1 7/16	1/2	0.46
35	TS2035	20	1.750	1.850	B	1/2	7/8	1 9/16	1/2	0.56
36	TS2036	20	1.800	1.900	B	1/2	15/16	1 5/8	1/2	0.60
40	TS2040	20	2.000	2.100	B	1/2	1 1/16	1 13/16	1/2	0.76
45	TS2045	20	2.250	2.350	B	1/2	1 1/4	2	1/2	0.95
50	TS2050	20	2.500	2.600	B	1/2	1 1/4	2	1/2	1.08
60	TS2060	20	3.000	3.100	B	1/2	1 5/16	2 1/8	1/2	1.45
70	TS2070	20	3.500	3.600	B	1/2	1 7/16	2 3/8	1/2	1.93
72	TS2072	20	3.600	3.700	B	1/2	1 7/16	2 3/8	1/2	2.01
80	TS2080	20	4.000	4.100	B	5/8	1 1/2	2 1/2	5/8	2.35
84	TS2084	20	4.200	4.300	B	5/8	1 1/2	2 1/2	5/8	2.53
90	TS2090	20	4.500	4.600	B	5/8	1 1/2	2 1/2	5/8	2.82
96	TS2096	20	4.800	4.900	B	5/8	1 1/2	2 1/2	5/8	3.14
100	TS20100	20	5.000	5.100	B	5/8	1 1/2	2 1/2	5/8	3.35
120	TS20120	20	6.000	6.100	B	5/8	1 1/2	2 1/2	5/8	4.58

* Recommended maximum bore with keyway and set screw.

20° P.A. Gears Will Not Operate With 14½° P.A.

Bored-to-Size

No. Teeth	Catalog Number	Pressure Angle (Deg.)	Diameter Pitch	Diameter Outside	Type	Bore (Inches) Stock	Bore (Inches) Keyway	Set Screw	Hub (Inches) Diameter	Hub (Inches) Proj.	Weight Lbs. (App.)
12	TS2012BS 5/16	20	0.600	0.700	B	5/16	NONE	#35 P.H.	15/32	7/16	0.04
14	TS2014BS 5/16	20	0.700	0.800	B	5/16	NONE	#35 P.H.	35/64	7/16	0.06
15	TS2015BS 3/8	20	0.750	0.850	B	3/8	NONE	(1) 8-32	39/64	7/16	0.07
16	TS2016BS 3/8	20	0.800	0.900	B	3/8	NONE	(1) 8-32	21/32	7/16	0.08
18	TS2018BS 3/8	20	0.900	1.000	B	3/8	NONE	(1) 10-24	3/4	7/16	0.12
20	TS2020BS 1/2	20	1.000	1.100	B	1/2	NONE	(1) 10-24	55/64	7/16	0.13
24	TS2024BS 1/2	20	1.200	1.300	B	1/2	NONE	(1) 1/4-20	1 1/16	7/16	0.22
25	TS2025BS 1/2	20	1.250	1.350	B	1/2	NONE	(1) 1/4-20	1 7/64	7/16	0.24
30	TS2030BS 1/2	20	1.500	1.600	B	1/2	NONE	(1) 1/4-20	1 23/64	7/16	0.38
35	TS2035BS 1/2	20	1.750	1.850	B	1/2	NONE	(1) 1/4-20	1 9/16	1/2	0.56
40	TS2040BS 1/2	20	2.000	2.100	B	1/2	NONE	(1) 1/4-20	1 13/16	1/2	0.76
40	TS2040BS 5/8	20	2.000	2.100	B	5/8	3/16 × 3/32	(1) 1/4-20 @ 90	1 13/16	1/2	0.76
40	TS2040BS 3/4	20	2.000	2.100	B	3/4	3/16 × 3/32	(1) 1/4-20 @ 90	1 13/16	1/2	0.76

20° Horsepower Ratings (Approximate)

For
Class I Service (Service Factor = 1.0)

4 Diametral Pitch — 20° Pressure Angle — 3½" Face

No. Teeth	25 RPM		50 RPM		100 RPM		200 RPM		300 RPM		500 RPM		600 RPM		900 RPM		1200 RPM		1800 RPM	
	S	CI	S	CI	S	CI	S	CI	S	CI	S	CI	S	CI	S	CI	S	CI	S	CI
11	2.62		5.09		9.64		17.41		23.81		33.72		37.64		46.69		53.06			
12•	3.10		6.02		11.40		20.59		28.15		39.88		44.52		55.21		62.75			
13	3.62		7.03		13.30		24.03		32.86		46.55		51.97		64.45		73.25			
14•	4.07		7.91		14.98		27.06		37.00		52.41		58.51		72.57		82.48			
15•	4.57		8.88		16.80		30.35		41.51		58.80		65.64		81.41		92.53			
16•	4.97		9.67		18.30		33.05		45.20		64.03		71.47		88.64		100.75			
17	5.41		10.51		19.90		35.95		49.16		69.64		77.74		96.42					
18•	5.84		11.35		21.49		38.82		53.09		75.20		83.95		104.12					
19	6.29		12.22		23.13		41.77		57.13		80.93		90.33		112.04					
20•	6.74		13.11		24.81		44.81		61.29		86.81		96.91							
21	7.19		13.98		26.46		47.79		65.36		92.58		103.34							
22•	7.65		14.87		28.14		50.83		69.52		98.48		109.93							
24•	8.52		16.56		31.35		56.63		77.45		109.71		122.47							
25	8.96		17.41		32.95		59.52		81.39		115.30		128.70							
26	9.43		18.32		34.67		62.63		85.65		121.32		135.43							
27	9.90		19.24		36.42		65.79		89.97		127.45		142.27							
28•	10.39		20.18		38.21		69.01		94.38		133.69		149.24							
30•	11.32		22.00		41.63		75.20		102.84		145.69									
32•	12.27		23.85		45.15		81.56		111.54		158.00									
33	12.76		24.80		46.95		84.80		115.97		164.28									
35	13.79		26.81		50.74		91.66		125.35		177.56									
36•	14.30		27.79		52.61		95.03		129.96		184.10						ALL STEEL			
40•	16.40		31.87		60.32		108.95		149.00											
42	17.39		33.80		63.98		115.58		158.06											
44•	18.41		35.77		67.71		122.31		167.27											
45	18.92		36.77		69.60		125.72		171.93											
48•	20.54		39.91		75.54		136.46		186.61											
50	21.50		41.78		79.08		142.84		195.35											
52	22.52		43.77		82.85		149.65		204.66											
54	23.56		45.78		86.66		156.54		214.08											
55	24.00		46.63		88.26		159.44		218.04											
56•	24.49		47.59		90.09		162.73													
60•	26.62		51.73		97.92		176.87													
64•	28.60		55.57		105.19		190.01													
66	29.63		57.58		108.99		196.87													
70	31.65		61.50		116.41		210.27													
72•	32.55		63.26		119.73		216.28													
80•	36.76		71.43		135.21		244.23													
84	38.86		75.52		142.94		258.21													
88	40.80		79.30		150.09															
90	41.83		81.28		153.85															
96	44.92		87.29		165.23															
100	46.90		91.13		172.50															
108	50.87		98.87		187.14															
110	51.93		100.92		191.03															
112	52.88		102.76		194.50															
120	57.03		110.84		209.79															
144	54.18		105.28		199.28															
160	77.39		150.40		284.68															
200	97.58		189.64		358.95															

Ratings are based on strength calculation.

• Designates stock sizes for this pitch.

Note: 1. Ratings to right of heavy line are not recommended, as pitch line velocity exceeds 1000 feet per minute. They should be used for interpolation purposes only.

2. Non-metallic gears are most commonly used for the driving pinion of a pair of gears, with mating gear made of Cast Iron or Steel, where pitch line velocities exceed 1000 FPM and are not subjected to shock loads.

20° Horsepower Ratings (Approximate)

For
Class I Service (Service Factor = 1.0)

5 Diametral Pitch — 20° Pressure Angle — 2½" Face

No. Teeth	25 RPM		50 RPM		100 RPM		200 RPM		300 RPM		500 RPM		600 RPM		900 RPM		1200 RPM		1800 RPM	
	S	CI	S	CI	S	CI	S	CI	S	CI	S	CI	S	CI	S	CI	S	CI	S	CI
11•	1.20		2.35		4.50		8.28		11.49		16.67		18.78		23.82		27.50		32.54	
12	1.42		2.78		5.32		9.79		13.59		19.71		22.21		28.17		32.53			
13•	1.66		3.25		6.21		11.43		15.86		23.01		25.93		32.88		37.97			
14•	1.87		3.66		7.00		12.87		17.86		25.90		29.19		37.02		42.75			
15•	2.10		4.10		7.85		14.44		20.04		29.06		32.75		41.53		47.96			
16	2.29		4.47		8.55		15.72		21.82		31.64		35.66		45.22		52.22			
17•	2.49		4.86		9.30		17.10		23.73		34.42		38.79		49.19		56.80			
18	2.69		5.25		10.04		18.46		25.63		37.17		41.88		53.11		61.34			
19•	2.89		5.65		10.80		19.87		27.58		40.00		45.07		57.16		66.01			
20	3.10		6.06		11.59		21.31		29.58		42.91		48.35		61.31					
21	3.31		6.46		12.36		22.73		31.55		45.76		51.56		65.39					
22•	3.52		6.87		13.15		24.18		33.56		48.67		54.85		69.55					
24•	3.92		7.66		14.65		26.93		37.39		54.22		61.10		77.49					
25	4.12		8.05		15.39		28.30		39.29		56.98		64.21		81.43					
26	4.33		8.47		16.20		29.78		41.34		59.96		67.57							
27•	4.55		8.90		17.02		31.29		43.43		62.99		70.98							
28•	4.78		9.33		17.85		32.82		45.56		66.08		74.46							
30	5.20		10.17		19.45		35.76		49.64		72.00		81.14							
32	5.64		11.03		21.09		38.79		53.84		78.09		88.00							
33•	5.87		11.47		21.93		40.33		55.98		81.19		91.49							
35	6.34		12.40		23.70		43.59		60.51		87.76		98.89							
36•	6.58		12.85		24.58		45.19		62.73		90.99									
40	7.54		14.73		28.18		51.81		71.92		104.32									
42	8.00		15.63		29.89		54.96		76.30		110.66									
44•	8.46		16.54		31.63		58.17		80.74		117.11									
45	8.70		17.00		32.51		59.79		82.99											
48•	9.44		18.45		35.29		64.89		90.08											
50	9.89		19.32		36.94		67.93		94.30											
52	10.36		20.24		38.70		71.17		98.79											
54	10.83		21.17		40.48		74.44		103.34											
55	11.03		21.56		41.23		75.82		105.25											
56•	11.26		22.01		42.08		77.39		107.42								ALL STEEL			
60	12.24		23.92		45.74		84.11		116.76											
64	13.15		25.70		49.14		90.36		125.43											
66•	13.62		26.62		50.91		93.62		129.96											
70	14.55		28.44		54.38		100.00		138.81											
72•	14.97		29.25		55.93		102.85													
80	16.90		33.03		63.16		116.15													
84	17.87		34.92		66.78		122.79													
88•	18.76		36.67		70.12		128.93													
90	19.23		37.58		71.87		132.16													
96•	20.65		40.36		77.19		141.93													
100	21.56		42.14		80.58															
108•	23.39		45.71		87.42															
110	23.88		46.67		89.24															
112•	24.31		47.51																	
120	26.23		51.25																	
144	24.91		48.68																	
160	35.59		69.54																	
200	44.87		87.69																	

Ratings are based on strength calculation.

• Designates stock sizes for this pitch.

Note: 1. Ratings to right of heavy line are not recommended, as pitch line velocity exceeds 1000 feet per minute. They should be used for interpolation purposes only.

2. Non-metallic gears are most commonly used for the driving pinion of a pair of gears, with mating gear made of Cast Iron or Steel, where pitch line velocities exceed 1000 FPM and are not subjected to shock loads.

20° Horsepower Ratings (Approximate)

For
Class I Service (Service Factor = 1.0)

6 Diametral Pitch — 20° Pressure Angle — 2" Face

No. Teeth	25 RPM		50 RPM		100 RPM		200 RPM		300 RPM		500 RPM		600 RPM		900 RPM		1200 RPM		1800 RPM	
	S	CI	S	CI	S	CI	S	CI	S	CI	S	CI	S	CI	S	CI	S	CI	S	CI
11•	0.67		1.32		2.54		4.73		6.63		9.79		11.11		14.34		16.78		20.21	
12•	0.79		1.56		3.00		5.59		7.84		11.58		13.14		16.96		19.84		23.91	
13	0.93		1.82		3.50		6.52		9.15		13.51		15.34		19.80		23.16		27.91	
14•	1.04		2.05		3.94		7.35		10.31		15.21		17.27		22.29		26.08		31.42	
15•	1.17		2.30		4.43		8.24		11.56		17.07		19.37		25.01		29.26		35.25	
16•	1.28		2.50		4.82		8.97		12.59		18.58		21.10		27.23		31.85		38.38	
17	1.39		2.72		5.24		9.76		13.69		20.21		22.95		29.61		34.65			
18•	1.50		2.94		5.66		10.54		14.79		21.83		24.78		31.98		37.42			
19	1.61		3.16		6.09		11.34		15.91		23.49		26.66		34.41		40.26			
20	1.73		3.39		6.53		12.17		17.07		25.20		28.60		36.92		43.19			
21•	1.84		3.62		6.97		12.97		18.21		26.87		30.50		39.37		46.06			
22	1.96		3.85		7.41		13.80		19.37		28.59		32.45		41.88		49.00			
24•	2.19		4.29		8.26		15.38		21.57		31.85		36.15		46.65		54.59			
25	2.30		4.51		8.68		16.16		22.67		33.47		37.99		49.03					
26	2.42		4.74		9.13		17.00		23.86		35.22		39.97		51.59					
27•	2.54		4.98		9.59		17.86		25.06		37.00		41.99		54.20					
28	2.66		5.22		10.06		18.74		26.29		38.81		44.05		56.85					
30•	2.90		5.69		10.97		20.42		28.65		42.29		48.00		61.95					
32	3.15		6.17		11.89		22.14		31.07		45.86		52.06							
33•	3.27		6.42		12.36		23.02		32.31		47.69		54.13							
35	3.54		6.94		13.36		24.88		34.92		51.54		58.50							
36•	3.67		7.19		13.86		25.80		36.20		53.44		60.66							
40	4.21		8.25		15.89		29.58		41.51		61.27		69.54							
42•	4.46		8.75		16.85		31.38		44.03		64.99		73.77							
44	4.72		9.26		17.83		33.21		46.59		68.78		78.07							
45	4.85		9.52		18.33		34.13		47.89		70.70		80.25							
48•	5.27		10.33		19.90		37.05		51.98		76.73									
50	5.51		10.81		20.83		38.78		54.42		80.32									
52	5.78		11.33		21.82		40.63		57.01		84.15									
54•	6.04		11.85		22.82		42.50		59.63		88.02									
55	6.15		12.07		23.25		43.29		60.74							ALL STEEL				
56	6.28		12.32		23.73		44.18		61.99											
60•	6.83		13.39		25.79		48.02		67.38											
64•	7.33		14.39		27.70		51.59		72.38											
66•	7.60		14.91		28.71		53.45		75.00											
70	8.12		15.92		30.66		57.09		80.10											
72•	8.35		16.37		31.54		58.72		82.39											
80	9.43		18.49		35.61		66.31		93.04											
84•	9.97		19.55		37.65		70.10		98.36											
88	10.46		20.53		39.53		73.61		103.28											
90	10.73		21.04		40.52		75.45													
96•	11.52		22.60		43.52		81.03													
100	12.03		23.59		45.43		84.60													
108•	13.05		25.59		49.29		91.77													
110	13.32		26.12		50.31		93.68													
112	13.56		26.60		51.23		95.39													
120•	14.63		28.69		55.25															
144	13.89		27.25		52.49															
160	19.85		38.93		74.98															
200	25.03		49.09		94.54															

Ratings are based on strength calculation.

• Designates stock sizes for this pitch.

Note: 1. Ratings to right of heavy line are not recommended, as pitch line velocity exceeds 1000 feet per minute. They should be used for interpolation purposes only.

2. Non-metallic gears are most commonly used for the driving pinion of a pair of gears, with mating gear made of Cast Iron or Steel, where pitch line velocities exceed 1000 FPM and are not subjected to shock loads.

20° Horsepower Ratings (Approximate)

For
Class I Service (Service Factor = 1.0)

8 Diametral Pitch — 20° Pressure Angle — 1½" Face

No. Teeth	25 RPM		50 RPM		100 RPM		200 RPM		300 RPM		500 RPM		600 RPM		900 RPM		1200 RPM		1800 RPM	
	S	CI	S	CI	S	CI	S	CI	S	CI	S	CI	S	CI	S	CI	S	CI	S	CI
11	0.28		0.56		1.09		2.06		2.94		4.45		5.10		6.76		8.07		10.00	
12•	0.34		0.66		1.29		2.44		3.48		5.26		6.03		7.99		9.54		11.83	
13	0.39		0.78		1.51		2.85		4.06		6.14		7.04		9.33		11.14		13.81	
14•	0.44		0.87		1.70		3.21		4.57		6.91		7.93		10.50		12.54		15.55	
15•	0.50		0.98		1.90		3.60		5.13		7.76		8.90		11.78		14.07		17.45	
16•	0.54		1.07		2.07		3.92		5.58		8.44		9.69		12.83		15.31		18.99	
17	0.59		1.16		2.25		4.26		6.07		9.18		10.53		13.95		16.66		20.66	
18•	0.64		1.25		2.43		4.61		6.56		9.92		11.38		15.07		17.99		22.31	
19•	0.68		1.35		2.62		4.96		7.06		10.67		12.24		16.22		19.36		24.01	
20•	0.73		1.45		2.81		5.32		7.57		11.45		13.13		17.40		20.77		25.76	
21	0.78		1.54		3.00		5.67		8.07		12.21		14.00		18.55		22.14			
22•	0.83		1.64		3.19		6.03		8.59		12.99		14.90		19.73		23.56			
24•	0.93		1.83		3.55		6.72		9.56		14.47		16.60		21.98		26.24			
25	0.97		1.92		3.73		7.06		10.05		15.21		17.44		23.10		27.58			
26•	1.02		2.02		3.93		7.43		10.58		16.00		18.35		24.31		29.02			
27	1.08		2.12		4.12		7.80		11.11		16.81		19.28		25.54		30.49			
28•	1.13		2.23		4.33		8.19		11.66		17.63		20.22		26.79		31.98			
30•	1.23		2.43		4.71		8.92		12.70		19.21		22.04		29.19		34.85			
32•	1.33		2.63		5.11		9.68		13.77		20.84		23.90		31.66					
33	1.39		2.73		5.31		10.06		14.32		21.67		24.85		32.92					
35	1.50		2.96		5.74		10.87		15.48		23.42		26.86		35.58					
36•	1.56		3.06		5.96		11.27		16.05		24.28		27.85		36.89					
40•	1.78		3.51		6.83		12.92		18.40		27.84		31.93		42.29					
42•	1.89		3.73		7.24		13.71		19.52		29.53		33.87		44.86					
44•	2.00		3.94		7.67		14.51		20.66		31.25		35.84		47.48					
45	2.06		4.05		7.88		14.91		21.23		32.12		36.84					STEEL		
48•	2.23		4.40		8.55		16.19		23.05		34.86		39.99					CAST		
50		1.12		2.21		4.30		8.13		11.58		17.52		20.09						
52•		1.18		2.32		4.50		8.52		12.13		18.35		21.05						
54		1.23		2.42		4.71		8.91		12.69		19.20		22.02						
55		1.25		2.47		4.80		9.08		12.93		19.55		22.43						
56•		1.28		2.52		4.90		9.27		13.19		19.96		22.89						
60•		1.39		2.74		5.32		10.07		14.34		21.69		24.88						
64•		1.49		2.94		5.72		10.82		15.40		23.30								
66		1.55		3.05		5.92		11.21		15.96		24.14								
70		1.65		3.26		6.33		11.97		17.05		25.79								
72•		1.70		3.35		6.51		12.32		17.53										
80•		1.92		3.78		7.35		13.91		19.80										
84		2.03		4.00		7.77		14.70		20.93										
88•		2.13		4.20		8.16		15.44		21.98										
90		2.18		4.30		8.36		15.82		22.53										
96•		2.34		4.62		8.98		16.99		24.20										
100		2.45		4.82		9.37		17.74		25.26										
108		2.66		5.23		10.17		19.25		27.40										
110		2.71		5.34		10.38		19.65		27.97										
112•		2.76		5.44		10.57		20.01		28.48										
120•		2.98		5.87		11.40		21.58		30.72										
144•		2.83		5.57		10.83		20.50												
160•		4.04		7.96		15.47		29.28												
200		5.09		10.04		19.51		36.92												

Ratings are based on strength calculation.

• Designates stock sizes for this pitch.

Note: 1. Ratings to right of heavy line are not recommended, as pitch line velocity exceeds 1000 feet per minute. They should be used for interpolation purposes only.

2. Non-metallic gears are most commonly used for the driving pinion of a pair of gears, with mating gear made of Cast Iron or Steel, where pitch line velocities exceed 1000 FPM and are not subjected to shock loads.

20° Horsepower Ratings (Approximate)

For
Class I Service (Service Factor = 1.0)

10 Diametral Pitch — 20° Pressure Angle — 1¼" Face

No. Teeth	25 RPM		50 RPM		100 RPM		200 RPM		300 RPM		500 RPM		600 RPM		900 RPM		1200 RPM		1800 RPM	
	S	CI	S	CI	S	CI	S	CI	S	CI	S	CI	S	CI	S	CI	S	CI	S	CI
11	0.15		0.30		0.59		1.13		1.62		2.49		2.87		3.88		4.70		5.95	
12•	0.18		0.36		0.70		1.33		1.91		2.94		3.40		4.58		5.55		7.04	
13	0.21		0.42		0.81		1.55		2.23		3.43		3.97		5.35		6.48		8.22	
14•	0.24		0.47		0.91		1.75		2.51		3.87		4.47		6.02		7.30		9.25	
15•	0.27		0.53		1.03		1.96		2.82		4.34		5.01		6.76		8.19		10.38	
16•	0.29		0.57		1.12		2.14		3.07		4.72		5.45		7.36		8.91		11.30	
17	0.31		0.62		1.22		2.32		3.34		5.14		5.93		8.00		9.70		12.30	
18•	0.34		0.67		1.31		2.51		3.61		5.55		6.41		8.64		10.47		13.28	
19	0.37		0.72		1.41		2.70		3.88		5.97		6.89		9.30		11.27		14.29	
20•	0.39		0.78		1.52		2.90		4.16		6.40		7.40		9.98		12.09		15.33	
21	0.42		0.83		1.62		3.09		4.44		6.83		7.89		10.64		12.89		16.35	
22•	0.44		0.88		1.72		3.29		4.72		7.26		8.39		11.32		13.71		17.39	
24•	0.50		0.98		1.91		3.66		5.26		8.09		9.35		12.61		15.28		19.37	
25•	0.52		1.03		2.01		3.85		5.53		8.50		9.82		13.25		16.05		20.36	
26•	0.55		1.08		2.12		4.05		5.82		8.95		10.34		13.94		16.89			
27	0.58		1.14		2.22		4.25		6.11		9.40		10.86		14.65		17.75			
28•	0.60		1.19		2.33		4.46		6.41		9.86		11.39		15.37		18.61			
30•	0.66		1.30		2.54		4.86		6.99		10.74		12.41		16.74		20.28			
32•	0.71		1.41		2.76		5.27		7.58		11.65		13.46		18.16		22.00			
33	0.74		1.47		2.87		5.48		7.88		12.11		14.00		18.88		22.87			
35•	0.80		1.59		3.10		5.93		8.52		13.09		15.13		20.41		24.72			
36•	0.83		1.64		3.21		6.14		8.83		13.58		15.68		21.16		25.63			
40•	0.95		1.88		3.68		7.04		10.12		15.56		17.98		24.26					
42	1.01		2.00		3.91		7.47		10.74		16.51		19.07		25.73					
44	1.07		2.12		4.14		7.91		11.36		17.47		20.19		27.23					
45•	1.10		2.18		4.25		8.13		11.68		17.96		20.75		27.99					
48•	1.19		2.36		4.61		8.82		12.68		19.49		22.52		30.38					
50•	1.25		2.47		4.83		9.24		13.27		20.41		23.57							
52	1.31		2.59		5.06		9.68		13.90		21.38		24.70							
54	1.37		2.71		5.29		10.12		14.54		22.36		25.83							
55•	1.40		2.76		5.39		10.31		14.81		22.78		26.31							
56	1.42		2.82		5.50		10.52		15.12		23.25		26.86							
60•	1.55		3.06		5.98		11.44		16.43		25.27		29.19				STEEL			
64		0.80		1.58		3.08		5.90		8.47		13.03		15.05			CAST			
66		0.83		1.63		3.19		6.11		8.78		13.50		15.60						
70•		0.88		1.75		3.41		6.53		9.38		14.42		16.66						
72		0.91		1.80		3.51		6.71		9.65		14.83		17.13						
80•		1.03		2.03		3.96		7.58		10.89		16.75								
84		1.08		2.14		4.19		8.01		11.52		17.71								
88		1.14		2.25		4.40		8.41		12.09		18.59								
90•		1.17		2.31		4.51		8.62		12.39		19.06								
96		1.25		2.48		4.84		9.26		13.31										
100•		1.31		2.59		5.06		9.67		13.90										
108		1.42		2.81		5.49		10.49		15.08										
110		1.45		2.87		5.60		10.71		15.39										
112		1.48		2.92		5.70		10.90		15.67										
120		1.59		3.15		6.15		11.76		16.90										
144		1.51		2.99		5.84		11.17		16.05										
160		2.16		4.27		8.35		15.96		22.93										
200		2.72		5.38		10.52		20.12		28.92										

Ratings are based on strength calculation.

• Designates stock sizes for this pitch.

Note: 1. Ratings to right of heavy line are not recommended, as pitch line velocity exceeds 1000 feet per minute. They should be used for interpolation purposes only.

2. Non-metallic gears are most commonly used for the driving pinion of a pair of gears, with mating gear made of Cast Iron or Steel, where pitch line velocities exceed 1000 FPM and are not subjected to shock loads.

20° Horsepower Ratings (Approximate)

For
Class I Service (Service Factor = 1.0)

12 Diametral Pitch — 20° Pressure Angle — 1" Face

No. Teeth	25 RPM		50 RPM		100 RPM		200 RPM		300 RPM		500 RPM		600 RPM		900 RPM		1200 RPM		1800 RPM	
	S	CI	S	CI	S	CI	S	CI	S	CI	S	CI	S	CI	S	CI	S	CI	S	CI
11	0.08		0.17		0.33		0.63		0.92		1.43		1.66		2.27		2.78		3.58	
12•	0.10		0.20		0.39		0.75		1.09		1.69		1.96		2.68		3.28		4.24	
13•	0.12		0.23		0.45		0.88		1.27		1.97		2.29		3.13		3.83		4.95	
14•	0.13		0.26		0.51		0.99		1.43		2.22		2.58		3.52		4.32		5.57	
15•	0.15		0.29		0.57		1.11		1.60		2.49		2.89		3.95		4.84		6.25	
16•	0.16		0.32		0.63		1.20		1.74		2.71		3.15		4.30		5.27		6.81	
17	0.18		0.35		0.68		1.31		1.90		2.95		3.42		4.68		5.74		7.40	
18•	0.19		0.37		0.73		1.42		2.05		3.18		3.70		5.06		6.19		7.99	
19•	0.20		0.40		0.79		1.52		2.20		3.43		3.98		5.44		6.67		8.60	
20•	0.22		0.43		0.85		1.63		2.36		3.68		4.27		5.84		7.15		9.23	
21•	0.23		0.46		0.90		1.74		2.52		3.92		4.55		6.22		7.63		9.84	
22•	0.25		0.49		0.96		1.85		2.68		4.17		4.84		6.62		8.11		10.47	
24•	0.28		0.55		1.07		2.06		2.99		4.64		5.39		7.38		9.04		11.66	
25•	0.29		0.57		1.13		2.17		3.14		4.88		5.67		7.75		9.50		12.26	
26•	0.31		0.60		1.19		2.28		3.30		5.14		5.96		8.16		9.99		12.90	
27	0.32		0.63		1.25		2.40		3.47		5.40		6.27		8.57		10.50		13.55	
28•	0.34		0.67		1.31		2.52		3.64		5.66		6.57		8.99		11.01		14.21	
30•	0.37		0.73		1.42		2.74		3.96		6.17		7.16		9.79		12.00		15.49	
32•	0.40		0.79		1.54		2.97		4.30		6.69		7.77		10.62		13.01			
33	0.41		0.82		1.61		3.09		4.47		6.95		8.08		11.05		13.53			
35	0.45		0.88		1.73		3.34		4.83		7.52		8.73		11.94		14.63			
36•	0.46		0.92		1.80		3.46		5.01		7.79		9.05		12.38		15.16			
40	0.53		1.05		2.06		3.97		5.74		8.94		10.38		14.19		17.39			
42•	0.56		1.12		2.19		4.21		6.09		9.48		11.01		15.05		18.44			
44	0.60		1.18		2.32		4.46		6.45		10.03		11.65		15.93		19.52			
45	0.61		1.21		2.38		4.58		6.63		10.31		11.97		16.37		20.06			
48•	0.66		1.32		2.58		4.97		7.19		11.19		13.00		17.77					
50	0.70		1.38		2.70		5.21		7.53		11.71		13.60		18.60					
52	0.73		1.44		2.83		5.45		7.89		12.27		14.25		19.49					
54•	0.76		1.51		2.96		5.71		8.25		12.84		14.91		20.39					
55	0.78		1.54		3.02		5.81		8.41		13.08		15.18		20.77					
56	0.79		1.57		3.08		5.93		8.58		13.35		15.50		21.19					
60•	0.86		1.71		3.35		6.45		9.33		14.51		16.84		23.04					
64	0.93		1.83		3.60		6.93		10.02		15.58		18.10		24.75					
66•	0.96		1.90		3.73		7.18		10.38		16.15		18.75							
70	1.02		2.03		3.98		7.66		11.09		17.24		20.03							
72•	1.05		2.09		4.09		7.88		11.40								STEEL			
80		0.57		1.13		2.22		4.27		6.18		9.61		11.16			CAST			
84•		0.60		1.20		2.35		4.52		6.53		10.16		11.80						
88		0.63		1.26		2.46		4.74		6.86		10.67		12.39						
90		0.65		1.29		2.52		4.86		7.03		10.94								
96•		0.70		1.38		2.71		5.22		7.55		11.75								
100		0.73		1.44		2.83		5.45		7.89		12.27								
108•		0.79		1.57		3.07		5.91		8.55		13.31								
110		0.81		1.60		3.13		6.04		8.73		13.58								
112		0.82		1.63		3.19		6.15		8.89										
120•		0.89		1.76		3.44		6.63		9.59										
144•		0.84		1.67		3.27		6.30		9.11										
160		1.20		2.38		4.67		9.00		13.01										
200		1.52		3.00		5.89		11.34		16.41										

Ratings are based on strength calculation.

• Designates stock sizes for this pitch.

Note: 1. Ratings to right of heavy line are not recommended, as pitch line velocity exceeds 1000 feet per minute. They should be used for interpolation purposes only.

2. Non-metallic gears are most commonly used for the driving pinion of a pair of gears, with mating gear made of Cast Iron or Steel, where pitch line velocities exceed 1000 FPM and are not subjected to shock loads.

20° Horsepower Ratings (Approximate)

For
Class I Service (Service Factor = 1.0)

16 Diametral Pitch — 20° Pressure Angle — ¾" Face

No. Teeth	25 RPM		50 RPM		100 RPM		200 RPM		300 RPM		500 RPM		600 RPM		900 RPM		1200 RPM		1800 RPM	
	S	CI	S	CI	S	CI	S	CI	S	CI	S	CI	S	CI	S	CI	S	CI	S	CI
11	0.04		0.07		0.14		0.27		0.40		0.63		0.73		1.02		1.28		1.69	
12•	0.04		0.08		0.17		0.32		0.47		0.74		0.87		1.21		1.51		2.00	
13•	0.05		0.10		0.19		0.38		0.55		0.87		1.01		1.41		1.76		2.33	
14•	0.06		0.11		0.22		0.42		0.62		0.98		1.14		1.59		1.98		2.63	
15•	0.06		0.12		0.24		0.48		0.69		1.10		1.28		1.79		2.22		2.95	
16•	0.07		0.14		0.27		0.52		0.76		1.19		1.40		1.94		2.42		3.21	
17•	0.07		0.15		0.29		0.56		0.82		1.30		1.52		2.12		2.63		3.49	
18•	0.08		0.16		0.31		0.61		0.89		1.40		1.64		2.28		2.84		3.77	
19	0.09		0.17		0.34		0.65		0.95		1.51		1.76		2.46		3.06		4.05	
20•	0.09		0.18		0.36		0.70		1.02		1.62		1.89		2.64		3.28		4.35	
21•	0.10		0.20		0.39		0.75		1.09		1.73		2.02		2.81		3.50		4.64	
22•	0.10		0.21		0.41		0.80		1.16		1.84		2.15		2.99		3.72		4.93	
24•	0.12		0.23		0.46		0.89		1.29		2.04		2.39		3.33		4.15		5.50	
25	0.12		0.24		0.48		0.93		1.36		2.15		2.51		3.50		4.36		5.78	
26•	0.13		0.26		0.50		0.98		1.43		2.26		2.64		3.69		4.59		6.08	
27	0.14		0.27		0.53		1.03		1.50		2.38		2.78		3.87		4.82		6.38	
28•	0.14		0.28		0.56		1.08		1.58		2.49		2.91		4.06		5.06		6.70	
30•	0.15		0.31		0.61		1.18		1.72		2.72		3.18		4.43		5.51		7.30	
32•	0.17		0.33		0.66		1.28		1.86		2.94		3.44		4.80		5.98		7.91	
33	0.17		0.35		0.68		1.33		1.94		3.06		3.58		4.99		6.21		8.23	
35	0.19		0.37		0.74		1.44		2.09		3.31		3.87		5.39		6.72		8.89	
36•	0.20		0.39		0.77		1.49		2.17		3.43		4.01		5.59		6.96		9.22	
40•	0.22		0.45		0.88		1.71		2.49		3.93		4.60		6.41		7.98		10.57	
42	0.24		0.47		0.93		1.81		2.64		4.17		4.88		6.80		8.47			
44	0.25		0.50		0.99		1.92		2.80		4.42		5.16		7.20		8.96			
45	0.26		0.51		1.01		1.97		2.87		4.54		5.31		7.40		9.21			
48•	0.28		0.56		1.10		2.14		3.12		4.93		5.76		8.03		10.00			
50	0.29		0.58		1.15		2.24		3.26		5.16		6.03		8.41		10.47			
52	0.31		0.61		1.21		2.34		3.42		5.40		6.32		8.81		10.96			
54	0.32		0.64		1.26		2.45		3.58		5.65		6.61		9.21		11.47			
55	0.33		0.65		1.29		2.50		3.64		5.76		6.73		9.38		11.68			
56•	0.34		0.67		1.31		2.55		3.72		5.88		6.87		9.58					
60•	0.36		0.72		1.43		2.77		4.04		6.39		7.47		10.41					
64•	0.39		0.78		1.53		2.98		4.34		6.86		8.02		11.18					
66	0.41		0.81		1.59		3.08		4.50		7.11		8.31		11.58					
70	0.43		0.86		1.70		3.29		4.81		7.59		8.88		12.37					
72•	0.45		0.88		1.74		3.39		4.94		7.81		9.13		12.73					
80•	0.50		1.00		1.97		3.83		5.58		8.82		10.31		14.37					
84•	0.53		1.06		2.08		4.05		5.90		9.32		10.90		15.19					
88•	0.56		1.11		2.19		4.25		6.20		9.79		11.45							
90	0.57		1.14		2.24		4.35		6.35		10.03		11.73							
96•	0.62		1.22		2.41		4.68		6.82		10.78		12.60							
100	0.64		1.27		2.51		4.88		7.12		11.25		13.16				STEEL			
108		0.33		0.66		1.31		2.54		3.71		5.86		6.85			CAST			
110		0.34		0.68		1.34		2.60		3.79		5.98		6.99						
112•		0.35		0.69		1.36		2.64		3.85		6.09		7.12						
120		0.37		0.74		1.47		2.85		4.16		6.57		7.68						
144•		0.36		0.71		1.39		2.71		3.95		6.24								
160•		0.51		1.01		1.99		3.87		5.64		8.91								
200		0.64		1.27		2.51		4.88		7.11		11.24								

Ratings are based on strength calculation.

• Designates stock sizes for this pitch.

Note: 1. Ratings to right of heavy line are not recommended, as pitch line velocity exceeds 1000 feet per minute. They should be used for interpolation purposes only.

2. Non-metallic gears are most commonly used for the driving pinion of a pair of gears, with mating gear made of Cast Iron or Steel, where pitch line velocities exceed 1000 FPM and are not subjected to shock loads.

20° Horsepower Ratings (Approximate)

For
Class I Service (Service Factor = 1.0)

20 Diametral Pitch — 20° Pressure Angle — ½" Face

No. Teeth	25 RPM		50 RPM		100 RPM		200 RPM		300 RPM		500 RPM		600 RPM		900 RPM		1200 RPM		1800 RPM	
	S	CI	S	CI	S	CI	S	CI	S	CI	S	CI	S	CI	S	CI	S	CI	S	CI
11	0.02		0.03		0.06		0.12		0.17		0.28		0.32		0.46		0.57		0.78	
12•	0.02		0.04		0.07		0.14		0.20		0.33		0.38		0.54		0.68		0.92	
13	0.02		0.04		0.08		0.16		0.24		0.38		0.45		0.63		0.79		1.07	
14•	0.02		0.05		0.09		0.18		0.27		0.43		0.50		0.71		0.89		1.20	
15•	0.03		0.05		0.11		0.21		0.30		0.48		0.56		0.80		1.00		1.35	
16•	0.03		0.06		0.11		0.22		0.33		0.52		0.61		0.87		1.09		1.47	
17	0.03		0.06		0.12		0.24		0.36		0.57		0.67		0.94		1.19		1.60	
18•	0.03		0.07		0.13		0.26		0.38		0.61		0.72		1.02		1.28		1.73	
19	0.04		0.07		0.14		0.28		0.41		0.66		0.78		1.10		1.38		1.86	
20•	0.04		0.08		0.16		0.30		0.44		0.71		0.83		1.18		1.48		2.00	
21•	0.04		0.08		0.17		0.32		0.47		0.76		0.89		1.25		1.58		2.13	
22•	0.04		0.09		0.18		0.34		0.50		0.80		0.94		1.33		1.68		2.26	
24•	0.05		0.10		0.20		0.38		0.56		0.90		1.05		1.49		1.87		2.52	
25•	0.05		0.10		0.21		0.40		0.59		0.94		1.11		1.56		1.96		2.65	
26	0.06		0.11		0.22		0.42		0.62		0.99		1.16		1.64		2.07		2.79	
27	0.06		0.12		0.23		0.44		0.65		1.04		1.22		1.73		2.17		2.93	
28•	0.06		0.12		0.24		0.47		0.68		1.09		1.28		1.81		2.28		3.07	
30•	0.07		0.13		0.26		0.51		0.75		1.19		1.40		1.97		2.48		3.35	
32•	0.07		0.14		0.28		0.55		0.81		1.29		1.52		2.14		2.69		3.63	
33	0.07		0.15		0.29		0.57		0.84		1.34		1.58		2.22		2.80		3.78	
35•	0.08		0.16		0.32		0.62		0.91		1.45		1.70		2.40		3.03		4.08	
36•	0.08		0.17		0.33		0.64		0.94		1.50		1.77		2.49		3.14		4.23	
40•	0.10		0.19		0.38		0.74		1.08		1.72		2.02		2.86		3.60		4.85	
42	0.10		0.20		0.40		0.78		1.15		1.83		2.15		3.03		3.81		5.15	
44	0.11		0.21		0.42		0.83		1.21		1.93		2.27		3.21		4.04		5.45	
45•	0.11		0.22		0.44		0.85		1.25		1.99		2.34		3.30		4.15		5.60	
48	0.12		0.24		0.47		0.92		1.35		2.16		2.54		3.58		4.50		6.08	
50•	0.13		0.25		0.49		0.97		1.42		2.26		2.65		3.75		4.71		6.36	
52	0.13		0.26		0.52		1.01		1.48		2.37		2.78		3.92		4.94		6.66	
54	0.14		0.27		0.54		1.06		1.55		2.48		2.91		4.10		5.17			
55	0.14		0.28		0.55		1.08		1.58		2.52		2.96		4.18		5.26			
56	0.14		0.28		0.56		1.10		1.61		2.57		3.02		4.27		5.37			
60•	0.16		0.31		0.61		1.20		1.75		2.80		3.29		4.64		5.84			
64	0.17		0.33		0.66		1.28		1.88		3.01		3.53		4.98		6.27			
66	0.17		0.34		0.68		1.33		1.95		3.11		3.66		5.16		6.50			
70•	0.19		0.37		0.73		1.42		2.08		3.33		3.91		5.51		6.94			
72•	0.19		0.38		0.75		1.46		2.14		3.42		4.02		5.67		7.14			
80•	0.22		0.43		0.85		1.65		2.42		3.86		4.54		6.40					
84•	0.23		0.45		0.89		1.75		2.56		4.08		4.80		6.77					
88	0.24		0.47		0.94		1.83		2.69		4.29		5.04		7.11					
90•	0.24		0.49		0.96		1.88		2.76		4.40		5.16		7.29					
96•	0.26		0.52		1.03		2.02		2.96		4.72		5.55		7.83					
100•	0.27		0.55		1.08		2.11		3.09		4.93		5.79		8.17			ALL STEEL		
108	0.30		0.59		1.17		2.29		3.35		5.35		6.28							
110	0.30		0.60		1.19		2.33		3.42		5.46		6.41							
112	0.31		0.62		1.22		2.38		3.48		5.56		6.53							
120•	0.33		0.66		1.31		2.56		3.76		5.99		7.04							
144	0.32		0.63		1.25		2.43		3.57		5.69		6.69							
160	0.45		0.90		1.78		3.48		5.10		8.13		9.56							
200	0.57		1.14		2.24		4.38		6.43		10.26		12.05							

Ratings are based on strength calculation.

• Designates stock sizes for this pitch.

Note: 1. Ratings to right of heavy line are not recommended, as pitch line velocity exceeds 1000 feet per minute. They should be used for interpolation purposes only.

2. Non-metallic gears are most commonly used for the driving pinion of a pair of gears, with mating gear made of Cast Iron or Steel, where pitch line velocities exceed 1000 FPM and are not subjected to shock loads.

Machined Gear Rack

Standard Face Width
Steel — 14½° & 20° Pressure Angle

Catalog Number 14½° P.A.	Catalog Number 20° P.A.	Pitch	Face Width (Inches)	Overall Thickness (Inches)	Pitch Line Backing	App. Weight Lbs./Pc
R3x2	TR3x2	3	3	1½	1.167	24.00
R3x4	TR3x4	3	3	1½	1.167	48.00
R3x6	TR3x6	3	3	1½	1.167	72.00
R4x2	TR4x2	4	2	1½	1.250	17.40
R4x4	TR4x4	4	2	1½	1.250	34.80
R4x6	TR4x6	4	2	1½	1.250	52.20
RA4x2		4	2	2	1.750	23.60
RA4x4		4	2	2	1.750	47.20
RA4x6		4	2	2	1.750	70.80
R5x2	TR5x2	5	1¾	1¼	1.050	12.80
R5x4	TR5x4	5	1¾	1¼	1.050	25.60
R5x6	TR5x6	5	1¾	1¼	1.050	38.40
RA5x2		5	1¾	1½	1.300	16.00
RA5x4		5	1¾	1½	1.300	32.00
RA5x6		5	1¾	1½	1.300	48.00
R6x2		6	1½	1	0.833	8.60
R6x4		6	1½	1	0.833	17.20
R6x6		6	1½	1	0.833	25.80
RA6x2	TR6x2	6	1½	1½	1.333	13.80
RA6x4	TR6x4	6	1½	1½	1.333	27.60
RA6x6	TR6x6	6	1½	1½	1.333	41.40
R8x2		8	1¼	¾	0.625	5.20
R8x4		8	1¼	¾	0.625	10.40
R8x6		8	1¼	¾	0.625	15.60
RA8x2	TR8x2	8	1¼	1¼	1.125	9.80
RA8x4	TR8x4	8	1¼	1¼	1.125	19.60
RA8x6	TR8x6	8	1¼	1¼	1.125	29.40
R10x2		10	1	⅝	0.525	3.60
R10x4		10	1	⅝	0.525	7.20
R10x6		10	1	⅝	0.525	10.80
RA10x2	TR10x2	10	1	1	0.900	6.00
RA10x4	TR10x4	10	1	1	0.900	12.00
RA10x6	TR10x6	10	1	1	0.900	18.00
R12x2		12	¾	½	0.417	2.00
R12x4		12	¾	½	0.417	4.00
R12x6		12	¾	½	0.417	6.00
RA12x2	TR12x2	12	¾	¾	0.667	3.40
RA12x4	TR12x4	12	¾	¾	0.667	6.80
RA12x6	TR12x6	12	¾	¾	0.667	10.20
R16x2		16	5/16	5/16	0.250	0.50
R16x4		16	5/16	5/16	0.250	1.00
R16x6		16	5/16	5/16	0.250	1.50
RA16x2	TR16x2	16	½	½	0.438	1.52
RA16x4	TR16x4	16	½	½	0.438	3.04
RA16x6	TR16x6	16	½	½	0.438	4.56
R20x2	TR20x2	20	⅜	⅜	0.325	0.84
R20x4	TR20x4	20	⅜	⅜	0.325	1.68
R20x6	TR20x6	20	⅜	⅜	0.325	2.52
R24x2		24	¼	¼	0.208	0.38
R24x4		24	¼	¼	0.208	0.76
R24x6		24	¼	¼	0.208	1.14

Martin Rack is made from low carbon cold drawn steel. It is available in 14½° and 20° pressure angle in 2, 4, and 6 foot lengths. Allowance is made for cutting and machining. Pinions to run with the rack may be selected from the Spur Gear section of the catalog. Special rack can be supplied in other materials, sizes, and pitches.

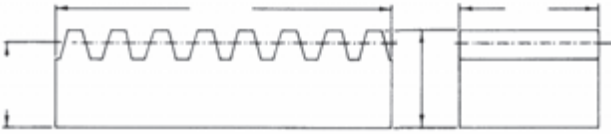

Rack in lengths up to 12' Available on Request

Machined Gear Rack

Martin Rack is made from low carbon cold drawn steel. It is available in 14½° and 20° pressure angle in 2, 4, and 6 foot lengths. Allowance is made for cutting and machining. Pinions to run with the rack may be selected from the Spur Gear section of the catalog. Special rack can be supplied in other materials, sizes, and pitches.

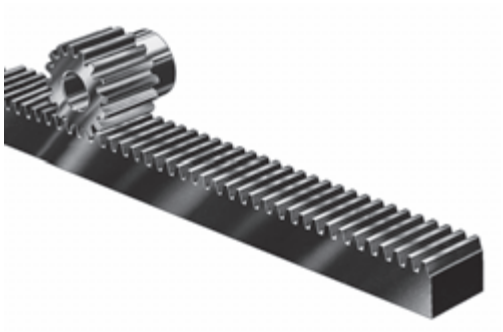

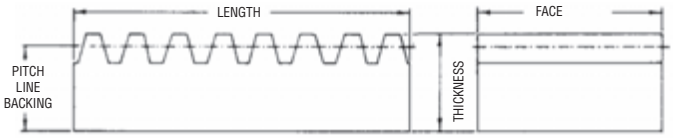

Wide Face Width
Steel — 20° Pressure Angle

Catalog Number	Pitch	Face Width (Inches)	Overall Thickness (Inches)	Pitch Line Backing	App. Weight Lbs./Pc
R204x2	4	3½	2	1.750	41.0
R204x4	4	3½	2	1.750	82.0
R204x6	4	3½	2	1.750	123.0
R205x2	5	2½	1½	1.300	22.4
R205x4	5	2½	1½	1.300	44.8
R205x6	5	2½	1½	1.300	67.2
R206x2	6	2	1½	1.333	17.0
R206x4	6	2	1½	1.333	34.0
R206x6	6	2	1½	1.333	51.0
R208x2	8	1½	1½	1.375	13.8
R208x4	8	1½	1½	1.375	27.6
R208x6	8	1½	1½	1.375	41.3
R2010x2	10	1¼	1¼	1.150	9.0
R2010x4	10	1¼	1¼	1.150	18.0
R2010x6	10	1¼	1¼	1.150	27.0
R2012x2	12	1	1	0.917	6.4
R2012x4	12	1	1	0.917	12.8
R2012x6	12	1	1	0.917	19.2
R2016x2	16	¾	¾	0.688	3.4
R2016x4	16	¾	¾	0.688	6.8
R2016x6	16	¾	¾	0.688	10.2
R2020x2	20	½	½	0.450	0.8
R2020x4	20	½	½	0.450	1.6
R2020x6	20	½	½	0.450	2.5

Martin Stocks 14½° Spur Gears & 20° Spur Gears

Rack in lengths up to 12' Available on Request

Bevel Gears
20° Pressure Angle

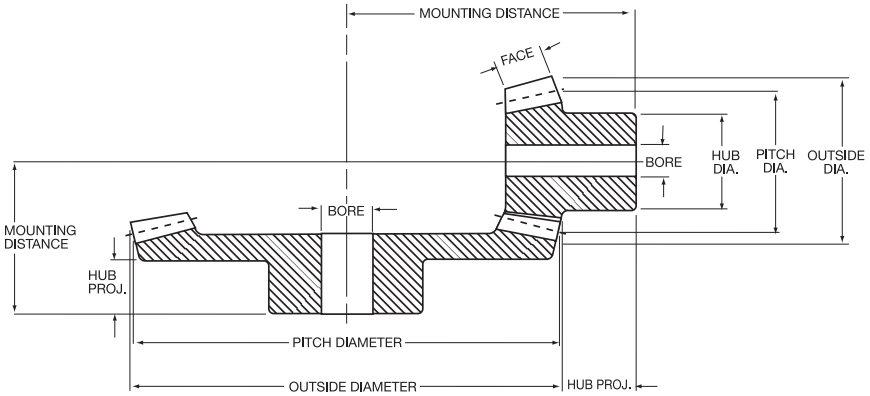

Bevel Gears are used as right angle drives where high efficiency is required. They are carried in stock as 1:1 to 6:1 ratios. Bevel Gears are cut with the long and short addendum system and 20 degree pressure angle to compensate for tooth undercut in gears and pinions having low numbers of teeth. Most all of Martin Bevel Gears are cut with the Coniflex tooth form to allow for a slight misalignment at assembly and during operation. Gears should be mounted at the correct distance from the core of apex center with thrust bearings being used in back of hubs to absorb the backward thrust created in this type of gearing.

Cast Iron Gears With Steel Pinions

Number Teeth	Catalog Number	Diameter Pitch	Diameter Outside	Face (Inches)	Bore (Inches) Diameter	Bore (Inches) Length	Mounting (Inches)	Hub (Inches) Diameter	Hub (Inches) Proj. (App.)	Wt. Lbs. (App.)
3 Pitch										
30	B330-2	10.00	10.19	1.87	1¼	3 19/32	5½	5	2	32.8
15	B315-2	5.00	5.80	1.87	1⅛	4 1/32	7¼	3¾	1 5/16	13.4
4 Pitch										
32	B432-2	8.00	8.10	1.40	1⅛	2 11/16	4¼	3¾	1 9/16	14.7
16	B416-2	4.00	4.60	1.40	1⅛	3 11/32	6	3¼	1 13/16	7.5
42	B442-3	10.50	10.59	1.42	1⅛	2 11/16	4	3¾	1½	20.5
14	B414-3	3.50	4.17	1.42	1⅛	3 27/64	7¼	3¼	1 15/16	6.8
56	B456-4	14.00	14.07	1.69	1¼	2⅞	4¼	4¼	1⅝	37.8
14	B414-4	3.50	4.20	1.69	1⅛	3 45/64	9	3¼	1 15/16	7.6
5 Pitch										
30	B530-2	6.00	6.12	1.04	1⅛	2¼	3½	3¼	1⅜	8.6
15	B515-2	3.00	3.48	1.04	1	2 25/64	4⅜	2⅝	1 9/32	3.1
45	B545-3	9.00	9.07	1.31	1¼	2½	3¾	3¾	1 11/16	14.6
15	B515-3	3.00	3.54	1.31	1	2 11/16	5⅞	2⅝	1 5/16	3.6
60	B560-4	12.00	12.05	1.70	1¼	2⅝	3¾	4	1 9/16	23.2
15	B515-4	3.00	3.56	1.70	1	3 13/64	7½	3	1½	5.0
6 Pitch										
36	BS636-2	6.00	6.10	1.06	1⅛	2¼	3½	3¼	1½	7.5
18	B618-2	3.00	3.42	1.06	1	2 49/64	4¾	2½	1⅜	3.3
42	B642-2	7.00	7.10	1.05	1⅛	2 19/64	3¾	3½	1½	9.5
21	B621-2	3.50	3.90	1.05	1	2 33/64	5	2½	1¼	3.8
45	B645-3	7.50	7.56	1.07	1⅛	2⅛	3	3¼	1¼	8.9
15	B615-3	2.50	2.94	1.07	⅞	2 9/16	5¼	2⅛	1 7/16	2.2
48	B648-2	8.00	8.10	1.17	1⅛	1 57/64	3 7/16	3¼	1	11.6
24	B624-2	4.00	4.40	1.17	1	2 35/64	5 7/16	2⅝	1¼	4.9
60	B660-4	10.00	10.04	1.21	1⅛	2¼	3¼	3¼	1⅜	14.3
15	B615-4	2.50	2.97	1.21	1	2 31/32	6¾	2½	1¾	3.2

Steel Bevel Gears may be furnished with hardened teeth at slight additional cost.

Bevel Gears
20° Pressure Angle

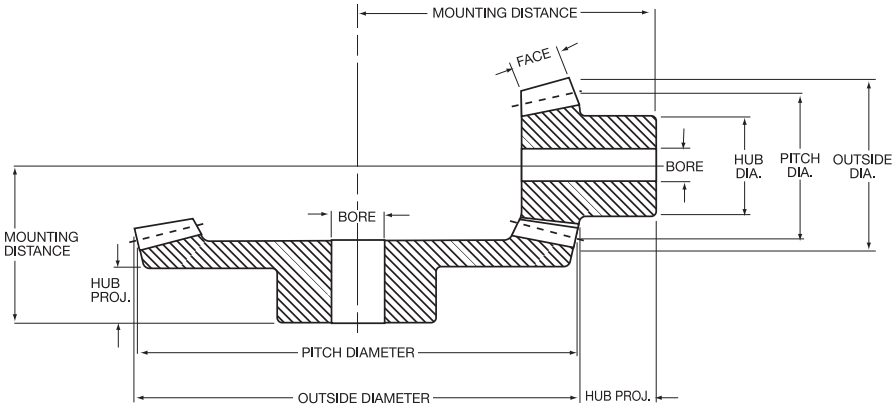

Cast Iron Gears With Steel Pinions

Number Teeth	Catalog Number	Diameter Pitch	Diameter Outside	Face (Inches)	Bore (Inches) Diameter	Bore (Inches) Length	Mounting (Inches)	Hub (Inches) Diameter	Hub (Inches) Proj. (App.)	Wt. Lbs. (App.)
8 Pitch										
40	BS840-2	5.00	5.07	0.82	1	1 27/32	2 7/8	3	1 1/4	4.9
20	B820-2	2.50	2.80	0.82	7/8	2 9/32	4	2 1/8	1 13/32	1.9
48	B848-3	6.05	6.20	0.84	7/8	1 5/8	2 3/8	2 3/4	1	4.5
16	B816-3	2.00	2.33	0.84	3/4	2 5/64	4 1/4	1 3/4	1 3/16	1.2
64	B864-4	8.00	8.03	0.84	1	1 7/8	2 3/4	2 3/4	1 1/4	9.0
16	B816-4	2.00	2.35	0.84	7/8	2 3/32	5 1/4	1 7/8	1 7/32	1.3
72	B872-4	9.00	9.03	1.22	1 1/8	2 9/16	3 1/4	3	1 11/16	12.2
18	B818-4	2.25	2.60	1.22	7/8	2 15/32	5 3/4	2 1/8	1 7/32	1.9
10 Pitch										
60	B1060-3	6.00	6.04	0.78	7/8	1 29/32	2 3/4	3	1 3/8	5.1
20	B1020-3	2.00	2.27	0.78	3/4	2 5/32	4 3/8	1 3/4	1 5/16	1.3
60	B1060-4	6.00	6.03	0.72	7/8	1 5/8	2 1/4	2 1/2	1 1/8	4.5
15	B1015-4	1.50	1.78	0.72	5/8	1 39/64	3 7/8	1 7/16	27/32	0.6
90	B1090-6	9.00	9.03	0.86	1	1 13/16	2 1/2	2 3/4	1 5/16	9.7
15	B1015-6	1.50	1.79	0.86	5/8	1 55/64	5 1/2	1 7/16	31/32	0.7
12 Pitch										
36	B1236-2	3.00	3.05	0.46	5/8	7/8	1 1/2	1 7/16	1/2	0.8
18	B1218-2	1.50	1.70	0.46	1/2	1 13/64	2 1/4	1 1/4	11/16	0.5
72	B1272-4	6.00	6.02	0.60	3/4	1 5/16	2	2	61/64	2.6
18	B1218-4	1.50	1.73	0.60	1/2	1 23/64	3 3/4	1 1/4	23/32	0.4
72	B1272-6	6.00	6.02	0.74	3/4	1 5/16	1 3/4	2	61/64	2.6
12	B1212-6	1.00	1.24	0.74	1/2	1 31/64	3 3/4	15/16	23/32	0.4

Steel Bevel Gears may be furnished with hardened teeth at slight additional cost.

Bevel Gears
20° Pressure Angle

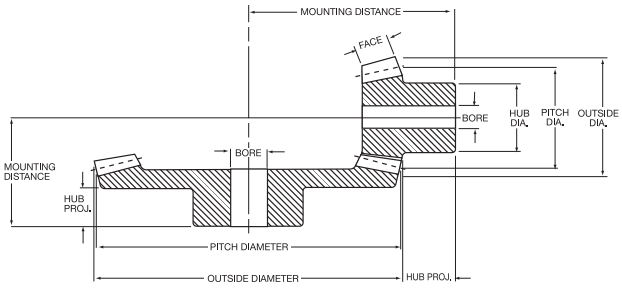

Steel Gears With Steel Pinions

Number Teeth	Catalog Number	Diameter Pitch	Diameter Outside	Face (Inches)	Bore (Inches) Diameter	Bore (Inches) Length	Mounting (Inches)	Hub (Inches) Diameter	Hub (Inches) Proj. (App.)	Wt. Lbs. (App.)
6 Pitch										
36	BS636-2	6.00	6.10	1.06	1⅛	2¼	3½	3¼	1½	8.70
18	BS618-2	3.00	3.42	1.06	1⅛	2 49/64	4¾	2½	1 19/32	3.20
8 Pitch										
40	BS840-2	5.00	5.07	0.82	1	1 27/32	2⅞	3	1¼	4.90
20	BS820-2	2.50	2.80	0.82	1	2 9/32	4	2⅛	1 13/32	1.80
10 Pitch										
30	BS1030-15	3.00	3.08	0.57	¾	1 7/16	2¼	2½	1	2.00
20	BS1020-15	2.00	2.21	0.57	¾	1 39/64	2½	1¾	29/32	0.80
40	BS1040-2	4.00	4.06	0.71	⅞	1 11/16	2½	3	1 3/16	3.70
20	BS1020-2	2.00	2.24	0.71	¾	1 5/64	3⅛	1¾	1 1/16	1.00
50	BS1050-2	5.00	5.06	0.70	¾	1 19/32	2⅝	2	1	4.00
25	B1025-2	2.50	2.74	0.70	¾	1 35/64	3⅜	2	¾	1.50
60	BS1060-3	6.00	6.04	0.78	1	1 55/64	2¾	3	1⅜	6.00
20	BS1020-3	2.00	2.27	0.78	⅞	2 5/32	4⅜	1¾	1 5/16	0.90
12 Pitch										
27	BS1227-15	2.25	2.32	0.41	½	1⅛	1¾	1½	25/32	0.60
18	BS1218-15	1.50	1.67	0.41	½	1⅛	1⅞	1¼	21/32	0.30
36	BS1236-2	3.00	3.05	0.53	1	1 17/64	1⅞	2⅛	⅞	1.30
18	BS1218-2	1.50	1.70	0.53	¾	1⅜	2⅜	1 5/16	13/16	0.30
36	BS1236-2A	3.00	3.05	0.53	⅝	1 17/64	1⅞	2⅛	⅞	1.40
18	BS1218-2A	1.50	1.70	0.53	½	1⅜	2⅜	1 5/16	13/16	0.40
48	BS1248-2	4.00	4.05	0.59	⅝	1 17/64	2	1⅝	¾	1.60
24	B1224-2	2.00	2.20	0.59	½	1 7/16	2⅞	1½	¾	0.80
54	BS1254-3	4.50	4.53	0.60	⅝	1 1/16	1¾	1¾	¾	1.90
18	B1218-3	1.50	1.72	0.60	½	1 11/32	3	1¼	11/16	0.40
14 Pitch										
28	BS1428-2	2.00	2.04	0.35	½	15/16	1⅜	1⅝	21/32	0.50
14	BS1414-2	1.00	1.17	0.35	½	31/32	1⅝	13/16	9/16	0.10
16 Pitch										
24	BS1624-2	1.50	1.54	0.19	½	⅝	1	1	7/16	0.15
12	BS1612-2	0.75	0.91	0.19	⅜	37/64	1⅛	21/32	11/32	0.08
24	BS1624-15	1.50	1.55	0.25	½	¾	1 3/16	1⅛	9/16	0.40
16	BS1616-15	1.00	1.13	0.25	⅜	47/64	1¼	13/16	7/16	0.09
32	BS1632-2	2.00	2.04	0.35	½	49/64	1 3/16	1⅛	½	0.30
16	BS1616-2	1.00	1.15	0.35	⅜	27/32	1½	13/16	7/16	0.04
48	BS1648-3	3.00	3.02	0.42	⅝	⅞	1 5/16	1½	9/16	0.74
16	B1616-3	1.00	1.17	0.42	7/16	59/64	2	⅞	15/32	0.13
64	BS1664-4	4.00	4.02	0.48	⅝	57/64	1⅜	2¼	9/16	1.70
16	B1616-4	1.00	1.17	0.48	½	63/64	2½	13/16	15/32	0.12

Steel Bevel Gears may be furnished with hardened teeth at slight additional cost.

Bevel Gears
Horsepower Ratings

Cast Iron

Catalog Number	Revolutions per Minute							
	50	100	200	300	600	900	1200	1800
B330-2	2.50	4.50	7.7	10.0	15.3			
B315-2	2.50	4.50	7.7	10.0	15.3			
B432-2	1.33	2.30	4.0	5.3	8.0	9.5		
B416-2	1.33	2.30	4.0	5.3	8.0	9.5		
B442-3	1.10	2.00	3.7	5.0	7.5	9.0		
B414-3	1.10	2.00	3.7	5.0	7.5	9.0		
B456-4	1.40	2.50	4.4	6.0	9.0	10.9		
B414-4	1.40	2.50	4.4	6.0	9.0	10.9		
B530-2	0.50	1.00	1.9	2.5	3.9	4.8	5.5	
B515-2	0.50	1.00	1.9	2.5	3.9	4.8	5.5	
B545-3	0.70	1.40	2.4	3.3	5.2	6.4	7.2	
B515-3	0.70	1.40	2.4	3.3	5.2	6.4	7.2	
B560-4	1.00	1.80	3.3	4.4	6.9	8.4	9.5	
B515-4	1.00	1.80	3.3	4.4	6.9	8.4	9.5	
B636-2	0.50	1.00	1.7	2.3	3.7	4.4	5.0	
B618-2	0.50	1.00	1.7	2.3	3.7	4.4	5.0	
B642-2	0.60	1.10	2.0	2.7	4.0	5.0		
B621-2	0.60	1.10	2.0	2.7	4.0	5.0		
B645-3	0.40	0.80	1.4	2.0	3.2	3.9	4.6	
B615-3	0.40	0.80	1.4	2.0	3.2	3.9	4.6	
B648-2	0.80	1.50	2.5	3.4	5.1	6.1		
B624-2	0.80	1.50	2.5	3.4	5.1	6.1		
B660-4	0.50	0.90	1.7	2.3	3.7	4.6	5.2	
B615-4	0.50	0.90	1.7	2.3	3.7	4.6	5.2	
B840-2	0.40	0.70	1.3	1.8	2.9	3.7	4.2	
B820-2	0.40	0.70	1.3	1.8	2.9	3.7	4.2	
B848-3	0.20	0.40	0.7	1.0	1.7	2.2	2.5	2.9
B816-3	0.20	0.40	0.7	1.0	1.7	2.2	2.5	2.9
B864-4	0.20	0.40	0.7	1.0	1.7	2.2	2.5	
B816-4	0.20	0.40	0.7	1.0	1.7	2.2	2.5	
B872-4	0.40	0.70	1.2	1.8	2.8	3.6	4.2	
B818-4	0.40	0.70	1.2	1.8	2.8	3.6	4.2	
B1060-3	0.17	0.30	0.6	0.8	1.3	1.7	1.9	2.3
B1020-3	0.17	0.30	0.6	0.8	1.3	1.7	1.9	2.3
B1060-4	0.10	0.20	0.4	0.5	0.9	1.2	1.4	1.8
B1015-4	0.10	0.20	0.4	0.5	0.9	1.2	1.4	1.8
B1090-6	0.14	0.25	0.5	0.7	1.2	1.7	1.9	2.3
B1015-6	0.14	0.25	0.5	0.7	1.2	1.7	1.9	2.3
B1236-2	0.05	0.11	0.2	0.3	0.5	0.6	0.8	1.0
B1218-2	0.05	0.11	0.2	0.3	0.5	0.6	0.8	1.0
B1254-3	0.07	0.15	0.3	0.4	0.7	0.9	1.0	1.3
B1218-3	0.07	0.15	0.3	0.4	0.7	0.9	1.0	1.3
B1272-4	0.07	0.15	0.3	0.4	0.7	0.9	1.1	1.4
B1218-4	0.07	0.15	0.3	0.4	0.7	0.9	1.1	1.4
B1272-6	0.06	0.11	0.2	0.3	0.6	0.8	1.0	1.2
B1212-6	0.06	0.11	0.2	0.3	0.6	0.8	1.0	1.2

Steel

Catalog Number	Revolutions per Minute							
	50	100	200	300	600	900	1200	1800
BS636-2	0.9	1.70	3.00	4.10	6.40	8.00	9.00	
BS618-2	0.9	1.70	3.00	4.10	6.40	8.00	9.00	
BS840-2	0.5	0.90	1.50	2.10	3.50	4.40	5.00	
BS820-2	0.5	0.90	1.50	2.10	3.50	4.40	5.00	
BS1030-15	0.2	0.40	0.70	1.00	1.70	2.10	2.30	2.9
BS1020-15	0.2	0.40	0.70	1.00	1.70	2.10	2.30	2.9
BS1040-2	0.25	0.50	0.90	1.30	2.10	2.70	3.00	3.7
BS1020-2	0.25	0.50	0.90	1.30	2.10	2.70	3.00	3.7
BS1050-2	0.33	0.64	1.20	1.60	2.50	3.20	3.70	
B 1025-2	0.33	0.64	1.20	1.60	2.50	3.20	3.70	
BS1060-3	0.3	0.50	1.00	1.40	2.40	3.00	3.50	4.3
BS1020-3	0.3	0.50	1.00	1.40	2.40	3.00	3.50	4.3
BS1227-15	0.09	0.17	0.33	0.50	0.80	1.00	1.20	1.6
BS1218-15	0.09	0.17	0.33	0.50	0.80	1.00	1.20	1.6
BS1236-2	0.12	0.25	0.40	0.60	1.00	1.40	1.70	2.0
BS1218-2	0.12	0.25	0.40	0.60	1.00	1.40	1.70	2.0
BS1236-2A	0.12	0.25	0.40	0.60	1.00	1.40	1.70	2.0
BS1218-2A	0.12	0.25	0.40	0.60	1.00	1.40	1.70	2.0
BS1248-2	0.18	0.37	0.70	0.90	1.60	2.00	2.30	2.8
B1224-2	0.18	0.37	0.70	0.90	1.60	2.00	2.30	2.8
BS1254-3	0.14	0.28	0.50	0.70	1.20	1.60	1.90	2.3
B1218-3	0.14	0.28	0.50	0.70	1.20	1.60	1.90	2.3
BS1428-2	0.05	0.08	0.16	0.20	0.40	0.54	0.70	0.8
BS1414-2	0.05	0.08	0.16	0.20	0.40	0.54	0.70	0.8
BS1624-2	0.02	0.03	0.05	0.08	0.14	0.20	0.25	0.3
BS1612-2	0.02	0.03	0.05	0.08	0.14	0.20	0.25	0.3
BS1624-15	0.03	0.05	0.09	0.14	0.25	0.33	0.40	0.5
BS1612-15	0.03	0.05	0.09	0.14	0.25	0.33	0.40	0.5
BS1632-2	0.03	0.08	0.14	0.20	0.37	0.50	0.60	0.8
BS1616-2	0.03	0.08	0.14	0.20	0.37	0.50	0.60	0.8
BS1648-3	0.05	0.09	0.17	0.25	0.50	0.60	0.80	1.0
BS1616-3	0.05	0.09	0.17	0.25	0.50	0.60	0.80	1.0
BS1664-4	0.05	0.10	0.20	0.33	0.50	0.70	0.90	1.1
BS1616-4	0.05	0.10	0.20	0.33	0.50	0.70	0.90	1.1

Miter Gears
20° Pressure Angle

Miter Gears are ordinarily used as right angle drives, transmitting horsepower between intersecting shafts at a 1:1 ratio. They are used where high efficiency is required. Only miters of the same number of teeth, pitch, and pressure angle can be operated together. More than two miters may be used in sets, as in a differential.

The thrust of Miter Gears causes the gears to separate; therefore, ball bearings or roller bearings should be used rather than sleeve bearings. Provisions should be made using thrust bearings to absorb backward thrust.

All standard stock Miter Gears must be mounted at right angles (90 degrees) for proper tooth bearing.

All Martin Miter and Bevel Gears are generated with the Coniflex tooth form. A slight misalignment of gears is permissible because of the localized tooth bearing running lengthwise along the gear tooth.

The mounting distance must be held in order to maintain proper backlash between gears. This will also insure that the ends of the gear teeth will be flush with each other. The use of a straight mineral oil as a lubricant is recommended for most Miter Gear applications.

Martin Stock Miter Gears are manufactured from .40 carbon steel.

The “M” Series is furnished unhardened with plain bore.
The “HM” Series is furnished hardened teeth with plain bore.
The “HMK” Series is furnished hardened teeth with keyway and setscrew for installation on the shaft.

Hardened Miter Gears have approximately 50% more horsepower capacity and provide greater gear wear than untreated gears.

All Martin Miter Gears are cut with the 20° pressure angle system. They will not operate with any other pressure angle system.

Miter Gears
20° Pressure Angle

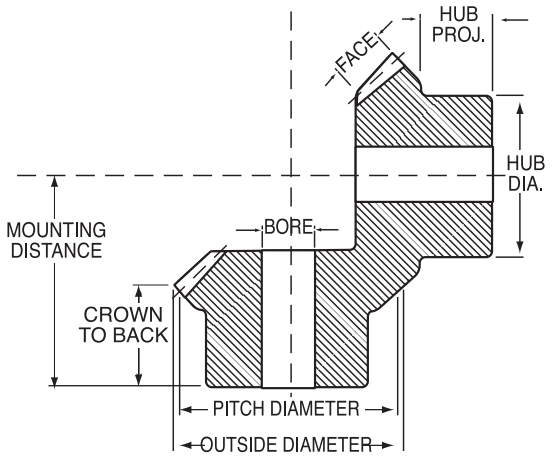

Steel - Plain Bore — Unhardened Teeth

Number Teeth	Catalog Number	Diameter Pitch	Diameter Outside	Face (Inches)	Bore (Inches) Diameter	Bore (Inches) Length	Mounting (Inches)	Hub (Inches) Diameter	Hub (Inches) Proj. (App.)	Wt. Lbs. (App.)
4 Pitch										
24	M424	6.00	6.36	1.33	1½	3 9/16	5½	4	1 15/16	14.4
24	M424A	6.00	6.36	1.33	1¾	3 9/16	5½	4	1 15/16	13.7
28	M428	7.00	7.36	1.43	2	3⅝	6	5	1 15/16	21.1
5 Pitch										
25	M525	5.00	5.29	1.10	1⅜	3	4⅝	3½	1¾	8.5
25	M525A	5.00	5.29	1.10	1½	3	4⅝	3½	1¾	8.3
25	M525B	5.00	5.29	1.10	1¾	3	4⅝	3½	1¾	7.8
6 Pitch										
24	M624	4.00	4.24	0.86	1¼	2 5/16	3⅝	3	1 5/16	4.4
24	M624A	4.00	4.24	0.86	1½	2 5/16	3⅝	3	1 5/16	4.3
27	M627	4.50	4.74	0.96	1¼	2⅝	4⅛	3¼	1½	6.3
27	M627A	4.50	4.74	0.96	1½	2⅝	4⅛	3¼	1½	5.9
8 Pitch										
24	M824	3.00	3.18	0.64	¾	1 37/64	2 9/16	1¾	13/16	1.5
24	M824A	3.00	3.18	0.64	1	1 49/64	2¾	2½	1	2.1
24	M824B	3.00	3.18	0.64	1¼	1 49/64	2¾	2½	1	1.9
28	M828	3.50	3.68	0.75	1	2 3/32	3¼	2½	1¼	2.9
28	M828A	3.50	3.68	0.75	1 3/16	2 3/32	3¼	2½	1¼	2.8
28	M828B	3.50	3.68	0.75	1¼	2 3/32	3¼	2½	1¼	2.6
32	M832	4.00	4.18	0.84	1	2 9/32	3⅝	3	1⅛	4.8
10 Pitch										
20	M1020A	2.00	2.14	0.44	½	1 23/64	2	1⅝	13/16	0.75
20	M1020B	2.00	2.14	0.44	⅝	1 23/64	2	1⅝	13/16	0.72
20	M1020	2.00	2.14	0.44	¾	1 23/64	2	1⅝	13/16	0.67
20	M1020C	2.00	2.14	0.44	⅞	1 23/64	2	1⅝	13/16	0.58
25	M1025	2.50	2.64	0.55	¾	1⅝	2 7/16	2	15/16	1.20
25	M1025A	2.50	2.64	0.55	⅞	1⅝	2 7/16	2	15/16	1.20
25	M1025B	2.50	2.64	0.55	1	1⅝	2 7/16	2	15/16	1.20
30	M1030	3.00	3.14	0.64	¾	1¾	2¾	2	1	1.80

Miter Gears
20° Pressure Angle

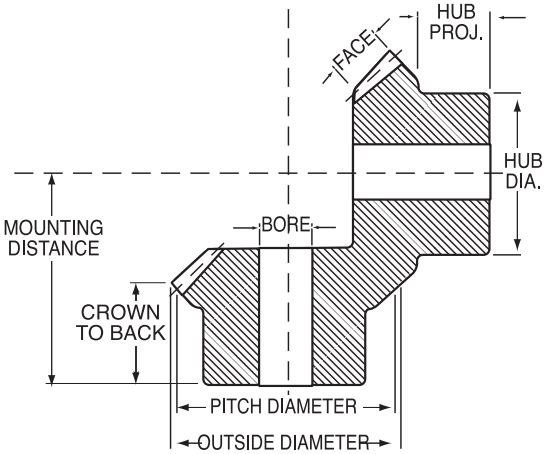

Steel - Plain Bore — Unhardened Teeth

Number Teeth	Catalog Number	Diameter		Face (Inches)	Bore (Inches)		Mounting (Inches)	Hub (Inches)		Wt. Lbs. (App.)
		Pitch	Outside		Diameter	Length		Diameter	Proj. (App.)	
12 Pitch										
15	M1215	1.25	1.37	0.27	3/8	5/64	1 1/4	1	1/2	0.17
15	M1215A	1.25	1.37	0.27	7/16	5/64	1 1/4	1	1/2	0.16
15	M1215B	1.25	1.37	0.27	1/2	5/64	1 1/4	1	1/2	0.15
18	M1218	1.50	1.62	0.32	1/2	1 1/64	1 1/2	1 1/4	5/8	0.30
18	M1218A	1.50	1.62	0.32	5/8	1 1/64	1 1/2	1 1/4	5/8	0.25
18	M1218B	1.50	1.62	0.32	3/4	1 1/64	1 1/2	1 1/4	5/8	0.22
21	M1221	1.75	1.87	0.39	1/2	1 3/16	1 3/4	1 3/8	11/16	0.45
21	M1221A	1.75	1.87	0.39	9/16	1 3/16	1 3/4	1 3/8	11/16	0.45
21	M1221B	1.75	1.87	0.39	5/8	1 3/16	1 3/4	1 3/8	11/16	0.43
21	M1221C	1.75	1.87	0.39	3/4	1 3/16	1 3/4	1 3/8	11/16	0.38
24	M1224	2.00	2.12	0.43	1/2	1 7/32	1 7/8	1 1/2	11/16	0.62
30	M1230	2.50	2.62	0.54	5/8	1 31/64	2 5/16	1 3/4	27/32	1.10
14 Pitch										
14	M1414	1.00	1.11	0.19	3/8	47/64	1 1/16	7/8	1/2	0.10
14	M1414A	1.00	1.11	0.19	7/16	47/64	1 1/16	7/8	1/2	0.09
16 Pitch										
12	M1612	0.75	0.84	0.16	5/16	37/64	13/16	5/8	3/8	0.05
16	M1616	1.00	1.09	0.22	3/8	3/4	1 1/16	3/4	7/16	0.07
20	M1620	1.25	1.34	0.27	7/16	27/32	1 1/4	1	1/2	0.16
24	M1624	1.50	1.59	0.31	1/2	7/8	1 3/8	1	1/2	0.20
20 Pitch										
20	M2020	1.00	1.07	0.23	3/8	13/16	1 1/8	3/4	1/2	0.06
25	M2025	1.25	1.32	0.25	3/8	3/4	1 3/16	1	3/8	0.14
24 Pitch										
24	M2424	1.00	1.06	0.20	1/4	9/16	29/32	5/8	9/32	0.12

Miter Gears
20° Pressure Angle

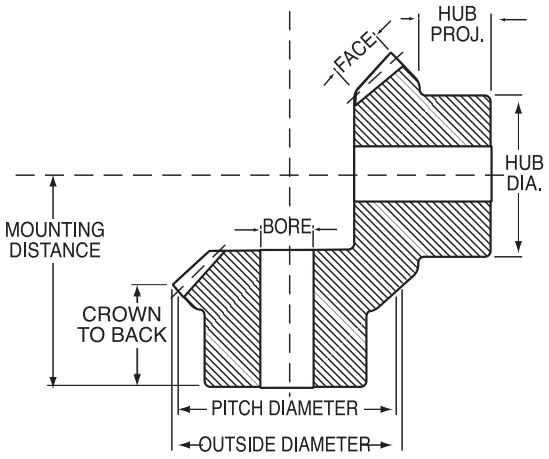

Steel - Plain Bore — Hardened Teeth

Number Teeth	Catalog Number	Diameter Pitch	Diameter Outside	Face (Inches)	Bore (Inches) Diameter	Bore (Inches) Length	Mounting (Inches)	Hub (Inches) Diameter	Hub (Inches) Proj. (App.)	Wt. Lbs. (App.)
4 Pitch										
24	HM424	6.00	6.36	1.33	1½	3 9/16	5½	4	1 15/16	14.4
24	HM424A	6.00	6.36	1.33	1¾	3 9/16	5½	4	1 15/16	13.7
28	HM428	7.00	7.36	1.43	2	3⅝	6	5	1 15/16	21.1
5 Pitch										
25	HM525	5.00	5.29	1.10	1⅜	3	4⅝	3½	1¾	8.5
25	HM525A	5.00	5.29	1.10	1½	3	4⅝	3½	1¾	8.3
25	HM525B	5.00	5.29	1.10	1¾	3	4⅝	3½	1¾	7.5
6 Pitch										
24	HM624	4.00	4.24	0.86	1¼	2 5/16	3⅜	3	1 5/16	4.4
24	HM624A	4.00	4.24	0.86	1½	2 5/16	3⅜	3	1 5/16	4.0
27	HM627	4.50	4.74	0.96	1¼	2⅝	4⅛	3¼	1½	6.3
27	HM627A	4.50	4.74	0.96	1½	2⅝	4⅛	3¼	1½	5.9
8 Pitch										
24	HM824	3.00	3.18	0.64	¾	1 37/64	2 9/16	1¾	13/16	1.5
24	HM824A	3.00	3.18	0.64	1	1 49/64	2¾	2½	1	2.1
24	HM824B	3.00	3.18	0.64	1¼	1 49/64	2¾	2½	1	2.6
28	HM828	3.50	3.68	0.75	1	2 3/32	3¼	2½	1¼	3.0
28	HM828A	3.50	3.68	0.75	1 3/16	2 3/32	3¼	2½	1¼	2.8
28	HM828B	3.50	3.68	0.75	1¼	2 3/32	3¼	2½	1¼	2.6
32	HM832	4.00	4.18	0.85	1	2 3/32	3⅜	3	1⅛	4.7
10 Pitch										
20	HM1020A	2.00	2.14	0.44	½	1 23/64	2	1⅝	13/16	0.76
20	HM1020B	2.00	2.14	0.44	⅝	1 23/64	2	1⅝	13/16	0.70
20	HM1020	2.00	2.14	0.44	¾	1 23/64	2	1⅝	13/16	0.64
20	HM1020C	2.00	2.14	0.44	⅞	1 23/64	2	1⅝	13/16	0.58
25	HM1025	2.50	2.64	0.55	¾	1⅝	2 7/16	2	15/16	1.30
25	HM1025A	2.50	2.64	0.55	⅞	1⅝	2 7/16	2	15/16	1.20
25	HM1025B	2.50	2.64	0.55	1	1⅝	2 7/16	2	15/16	1.20
30	HM1030	3.00	3.14	0.64	¾	1¾	2¾	2	1	1.80

Miter Gears
20° Pressure Angle

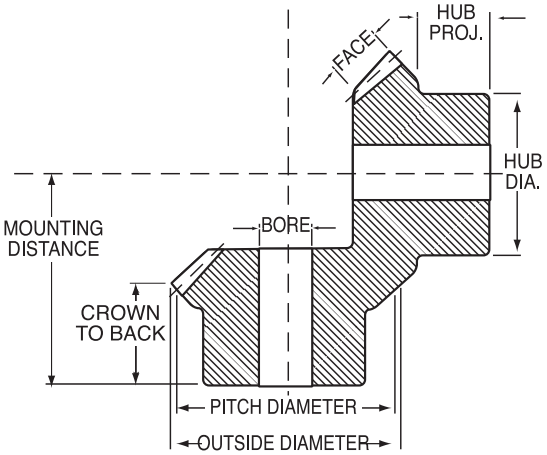

Steel - Plain Bore — Hardened Teeth

Number Teeth	Catalog Number	Diameter		Face (Inches)	Bore (Inches)		Mounting (Inches)	Hub (Inches)		Wt. Lbs. (App.)
		Pitch	Outside		Diameter	Length		Diameter	Proj. (App.)	
12 Pitch										
15	HM1215	1.25	1.37	0.27	3/8	55/64	1 1/4	1	1/2	0.15
15	HM1215B	1.25	1.37	0.27	1/2	55/64	1 1/4	1	1/2	0.15
18	HM1218	1.50	1.62	0.32	1/2	1 1/64	1 1/2	1 1/4	5/8	0.30
18	HM1218A	1.50	1.62	0.32	5/8	1 1/64	1 1/2	1 1/4	5/8	0.25
18	HM1218B	1.50	1.62	0.32	3/4	1 1/64	1 1/2	1 1/4	5/8	0.22
21	HM1221	1.75	1.87	0.39	1/2	1 3/16	1 3/4	1 3/8	11/16	0.22
21	HM1221B	1.75	1.87	0.39	5/8	1 3/16	1 3/4	1 3/8	11/16	0.42
24	HM1224	2.00	2.12	0.43	1/2	1 7/32	1 7/8	1 1/2	11/16	0.62
30	HM1230	2.50	2.62	0.54	5/8	1 31/64	2 5/16	1 3/4	27/32	1.10
14 Pitch										
14	HM1414	1.00	1.11	0.19	3/8	47/64	1 1/16	7/8	1/2	0.10
14	HM1414A	1.00	1.11	0.19	7/16	47/64	1 1/16	7/8	1/2	0.10
16 Pitch										
16	HM1616	1.00	1.09	0.22	3/8	3/4	1 1/16	3/4	7/16	0.07
24	HM1624	1.50	1.59	0.31	1/2	7/8	1 3/8	1	1/2	0.20
24 Pitch										
24	HM2424	1.00	1.06	0.20	1/4	9/16	29/32	5/8	9/32	0.06

Miter Gears
20° Pressure Angle

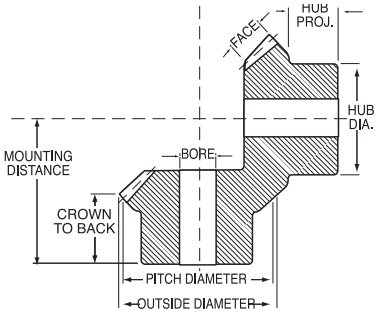

Steel - Furnished With Keyway and Set Screw — Hardened Teeth

Number Teeth	Catalog Number	Diameter Pitch	Diameter Outside	Face (Inches)	Bore (Inches) Diameter	Bore (Inches) Length	Mounting (Inches)	Hub (Inches) Diameter	Hub (Inches) Proj. (App.)	Wt. Lbs. (App.)
4 Pitch										
24	HMK424A	6.00	6.36	1.33	1¾	3 9/16	5½	4	1 15/16	13.7
5 Pitch										
25	HMK525	5.00	5.29	1.10	1¾	3	4⅝	3½	1¾	8.5
25	HMK525B	5.00	5.29	1.10	1¾	3	4⅝	3½	1¾	7.5
6 Pitch										
24	HMK624	4.00	4.24	0.86	1¼	2 5/16	3⅝	3	1 5/16	4.4
24	HMK624A	4.00	4.24	0.86	1½	2 5/16	3⅝	3	1 5/16	4.0
27	HMK627	4.50	4.74	0.96	1¼	2⅝	4⅛	3¼	1½	6.3
27	HMK627A	4.50	4.74	0.96	1½	2⅝	4⅛	3¼	1½	5.9
8 Pitch										
24	HMK824	3.00	3.18	0.64	¾	1 37/64	2 9/16	1¾	13/16	1.5
24	HMK824A	3.00	3.18	0.64	1	1 49/64	2¾	2½	1	2.1
24	HMK824B	3.00	3.18	0.64	1¼	1 49/64	2¾	2½	1	1.8
28	HMK828	3.50	3.68	0.75	1	2 3/32	3¼	2½	1¼	2.9
28	HMK828A	3.50	3.68	0.75	1 3/16	2 3/32	3¼	2½	1¼	2.7
28	HMK828B	3.50	3.68	0.75	1¼	2 3/32	3¼	2½	1¼	2.6
10 Pitch										
20	HMK1020A	2.00	2.14	0.44	½	1 29/64	2	1⅝	13/16	0.74
20	HMK1020B	2.00	2.14	0.44	⅝	1 29/64	2	1⅝	13/16	0.70
20	HMK1020	2.00	2.14	0.44	¾	1 29/64	2	1⅝	13/16	0.63
20	HMK1020C	2.00	2.14	0.44	⅞	1 29/64	2	1⅝	13/16	0.58
25	HMK1025	2.50	2.64	0.55	¾	1⅝	2 7/16	2	15/16	1.30
25	HMK1025A	2.50	2.64	0.55	⅞	1⅝	2 7/16	2	15/16	1.20
25	HMK1025B	2.50	2.64	0.55	1	1⅝	2 7/16	2	15/16	1.10
12 Pitch										
15	HMK1215B	1.25	1.37	0.27	½	55/64	1¼	1	½	0.14
18	HMK1218A	1.50	1.62	0.32	⅝	1 1/64	1½	1¼	⅝	0.25
21	HMK1221B	1.75	1.87	0.39	⅝	1 3/16	1¾	1⅜	11/16	0.41
30	HMK1230	2.50	2.62	0.54	⅝	1 31/64	2 9/16	1¾	27/32	1.10
16 Pitch										
16	HMK1616	1.00	1.09	0.22	⅜	¾	1 1/16	¾	7/16	0.07
24	HMK1624	1.50	1.59	0.31	½	⅞	1⅜	1	½	0.20

Miter Gear Horsepower Ratings

Steel

Catalog Number	Revolutions Per Minute									
	10	25	50	100	200	300	600	900	1200	1800
M424	0.80	1.90	3.60	6.40	10.60	13.5	18.8	21.5	23.0	
HM424	1.40	3.33	6.30	11.20	18.60	23.6	33.0	38.0	40.0	
M428	1.07	2.50	4.80	8.40	13.60	17.2	23.3	26.5	28.5	
HM428	1.90	4.50	8.40	14.70	23.80	30.0	40.0	46.0	50.0	
M525	0.45	1.05	2.00	3.70	6.30	8.1	11.6	13.6	15.0	
HM525	0.75	1.90	3.60	6.50	11.00	14.2	20.0	24.0	26.0	
M624	0.25	0.55	1.10	2.00	3.50	4.6	6.9	8.2	19.0	10.2
HM624	0.40	1.00	1.90	3.50	6.10	8.0	12.0	14.5	16.0	18.0
M627	0.30	0.75	1.40	2.50	4.30	5.7	8.5	9.9	11.0	12.0
HM627	0.50	1.33	2.50	4.40	7.50	10.0	1.5	17.5	19.0	21.0
M824	0.10	0.25	0.50	0.90	1.50	2.1	3.3	4.0	4.5	5.3
HM824	0.20	0.40	0.80	1.50	2.60	3.7	5.8	7.0	8.0	9.3
M828	0.15	0.33	0.70	1.20	2.20	2.9	4.4	5.3	6.0	6.8
HM828	0.25	0.60	1.20	2.10	3.90	5.0	7.7	9.3	10.5	12.0
M832	0.20	0.45	0.90	1.60	2.80	3.7	5.5	6.5	7.2	8.0
HM832	0.33	0.80	1.50	2.80	4.90	6.5	9.6	11.4	12.5	14.2
M1020	0.03	0.08	0.20	0.30	0.60	0.8	1.3	1.7	2.0	2.4
HM1020	0.05	0.15	0.30	0.50	1.00	1.4	2.3	3.0	3.5	4.2
M1025	0.06	0.15	0.30	0.50	0.90	1.3	2.0	2.5	2.9	3.5
HM1025	0.10	0.25	0.50	0.90	1.60	2.3	3.5	4.4	5.0	6.0
M1030	0.08	0.20	0.40	0.70	1.30	1.8	2.8	3.5	3.9	4.5
HM1030	0.15	0.33	0.70	1.30	2.30	3.2	4.9	6.1	6.8	8.0
M1215	0.01	0.02	0.05	0.10	0.20	0.3	0.5	0.6	0.8	0.9
HM1215	0.02	0.04	0.10	0.17	0.33	0.4	0.8	1.0	1.3	1.6
M1218	0.01	0.03	0.08	0.14	0.25	0.4	0.7	0.9	1.0	1.3
HM1218	0.02	0.05	0.15	0.25	0.47	0.7	1.1	1.5	1.8	2.2
M1221	0.02	0.05	0.11	0.20	0.40	0.5	0.9	1.2	1.4	1.7
HM1221	0.04	0.10	0.20	0.33	0.70	1.0	1.6	2.1	2.5	3.0
M1224	0.03	0.07	0.15	0.25	0.50	0.7	1.2	1.5	1.7	2.0
HM1224	0.05	0.12	0.25	0.47	0.90	1.2	2.1	2.6	3.0	3.5
M1230	0.05	0.12	0.25	0.44	0.80	1.1	1.8	2.2	2.5	3.0
HM1230	0.09	0.21	0.40	0.75	1.40	1.9	3.2	4.0	4.4	5.3
M1414		0.01	0.02	0.05	0.09	0.1	0.2	0.3	0.4	0.5
HM1414		0.02	0.04	0.09	0.16	0.2	0.4	0.6	0.7	0.9
M1616		0.01	0.02	0.05	0.09	0.1	0.2	0.3	0.4	0.5
HM1616		0.02	0.04	0.09	0.16	0.2	0.4	0.6	0.7	0.9
M1620		0.02	0.04	0.08	0.14	0.2	0.4	0.5	0.6	0.8
HM1620		0.04	0.07	0.15	0.25	0.4	0.7	0.9	1.0	1.3
M1624		0.03	0.06	0.12	0.20	0.3	0.5	0.7	0.8	1.0
HM1624		0.05	0.10	0.21	0.40	0.5	0.9	1.2	1.4	1.8
M2020		0.01	0.02	0.04	0.08	0.1	0.2	0.2	0.4	0.5
HM2020		0.02	0.04	0.07	0.14	0.2	0.4	0.5	0.6	0.8
M2025		0.02	0.03	0.06	0.12	0.2	0.3	0.4	0.5	0.6
HM2025		0.04	0.05	0.10	0.21	0.3	0.5	0.7	0.9	1.0

Ratings listed to right of dark line exceed recommended pitch line velocity.

Worm Gears

Right Hand Worm and Gear

Single, Double, Quadruple Thread Worms

★NOTE: SELF-LOCKING ABILITY

There is often some confusion as to the self-locking ability of a worm and gear set. Martin worm gear sets, under no condition should be considered to hold a load when at rest. The statement is made to cover the broad spectrum of variables affecting self-locking characteristics of a particular gear set in a specific application. Theoretically, a worm gear will not back drive if the friction angle is greater than the worm lead angle. However, the actual surface finish and lubrication may reduce this significantly. More important, vibration may cause motion at the point of mesh with further reduction in the friction angle.

Generally speaking, if the worm lead angle is less than 5°, there is reasonable expectation of self-locking. Again, no guarantee should be made and customer should be advised. **If safety is involved, a positive brake should be used.**

Originally, worm gearing was used to secure, by compact means, a large reduction of speed between driving and driven shafts with a proportionate increase (except for frictional loss) in the torque of the driven shaft. Worm gearing is still used for this purpose, and frequently the wheel is driven by a single-thread worm of such low helix angle that the drive cannot be reversed; that is the wheel cannot drive the worm as the gearing automatically locks itself against backward rotation. (*See note below.)

Although a multiple-threaded worm when applied under like conditions is much more efficient than a single-threaded worm, it does not follow that the multiple-threaded worm should always be used.

A single-threaded worm might be preferable when the most important requirement is to obtain a high ratio and especially if the worm must be self-locking.

When power is the primary factor, the multiple-threaded worms should be used.

LUBRICATION is an important factor when using worm gearing. An increase in heat generated means a decrease in efficiency. The amount of power which can be transmitted at a given temperature increases as the efficiency of the gearing increases.

MATERIALS for worm and worm gears are generally confined to steel for worms and bronze or cast iron for gears. When steel worms are run with bronze gears at high speeds, the worm is usually hardened with ground threads.

Direction of Rotation and Thrust
Right Hand

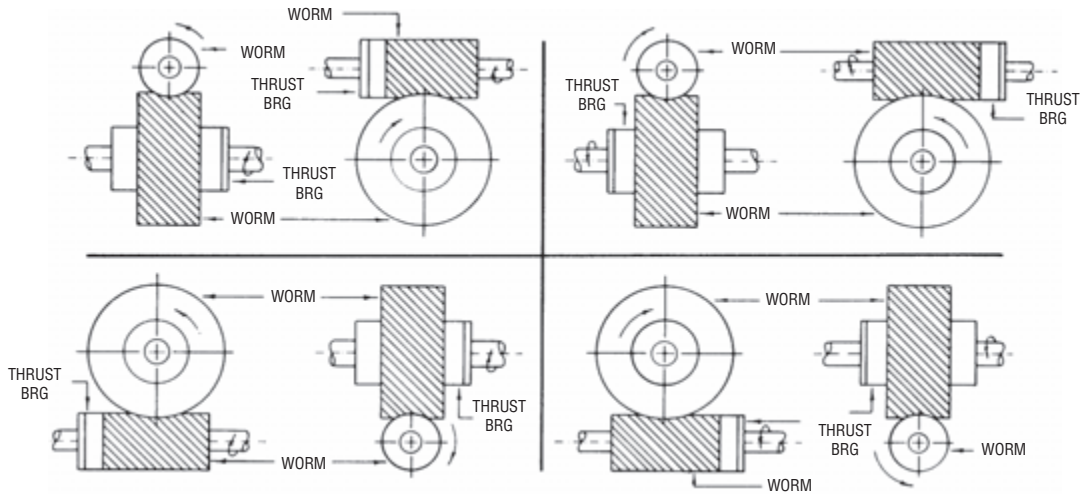

Worm and Worm Gears
3 Pitch • 2" Face • 14½° Pressure Angle

Right Hand Single Thread (Stocked Right Hand Only)

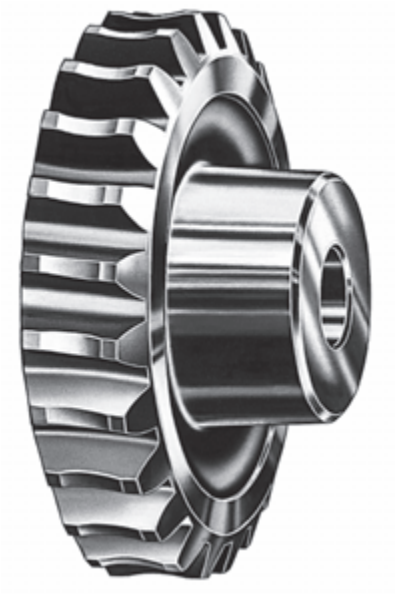

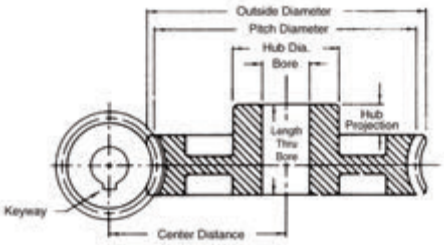

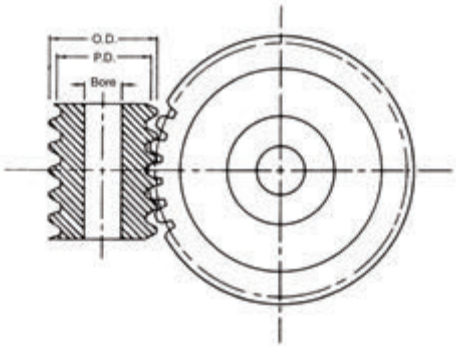

Cast Iron

No. Teeth	Catalog Number Cast Iron	Wt. Lbs. (App.)	Pitch Dia.	Bore (Inches)	Hub (Inches)		Style
					Dia.	Proj.	
18	W318	16.2	6.000	1	3	1½	W
24	W324	22.8	8.000	1½	3½	1½	S
30	W330	30.2	10.000	1½	3⅞	1½	S
36	W336	36.4	12.000	1½	3½	1½	S
54	W354	60.2	18.000	1½	4	1½	S

W = WEB S = SPOKE

Steel — 4° 46' Helix Angle Worms

Catalog Number Soft	Wt. Lbs. (App.)	Catalog Number Hardened	Wt. Lbs. (App.)	Faces (Inches)	Pitch Dia.	Bore (Inches)	Keyway (Inches)
W3	12.2	WG3	12.0	4	4.000	1½	⅜ × 3/16

Case hardened worms have ground and polished threads (Indicated by letter "G" in catalog number).
Please Note: Stock Bore sizes on ground worms may be difficult to modify.

Worm and Worm Gears

4 Pitch • 1½" Face • 14½° Pressure Angle

Right Hand Single Thread (Stocked Right Hand Only)

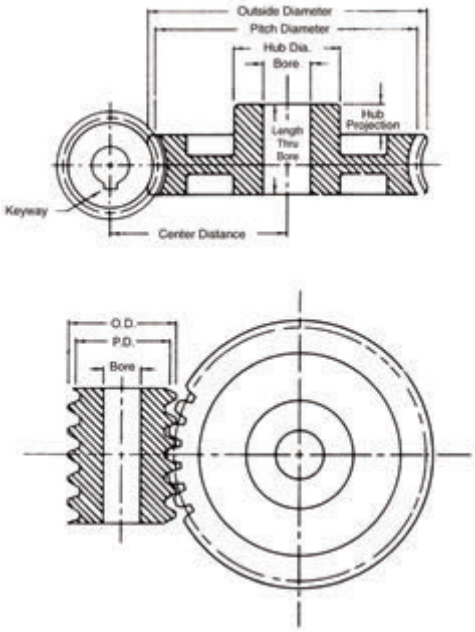

Cast Iron

No. Teeth	Catalog Number Cast Iron	Wt. Lbs. (App.)	Pitch Dia.	Bore (Inches)	Hub (Inches)		Style
					Dia.	Proj.	
20	W420	8.4	5.000	1	2½	1¼	W
24	W424	12.9	6.000	1	2½	1¼	W
32	W432	15.6	8.000	1¼	3	1¼	W
40	W440	27.5	10.000	1¼	3	1¼	W
48	W448	34.1	12.000	1½	4	1¼	W
64	W464	43.9	16.000	1½	4	1¼	S

W = WEB S = SPOKE

Steel — 4° 46' Helix Angle Worms

Catalog Number Soft	Wt. Lbs. (App.)	Catalog Number Hardened	Wt. Lbs. (App.)	Faces (Inches)	Pitch Dia.	Bore (Inches)	Keyway (Inches)
W4	5.6	WG4	5.5	3½	3.000	1¼	5/16 × 5/32

Case hardened worms have ground and polished threads (Indicated by letter "G" in catalog number).
Please Note: Stock Bore sizes on ground worms may be difficult to modify.

Worm and Worm Gears
6 Pitch • 1" Face • 14½° Pressure Angle

Right Hand Single Thread (Stocked Right Hand Only)

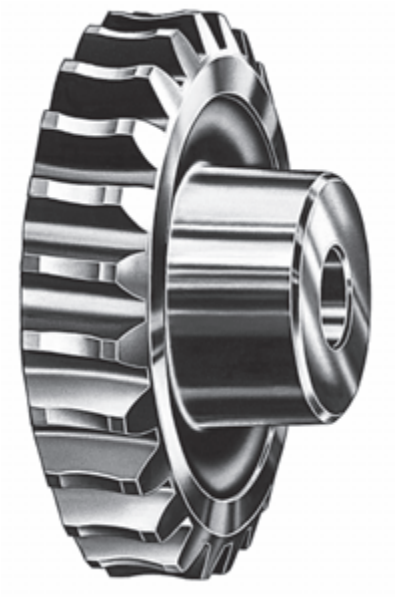

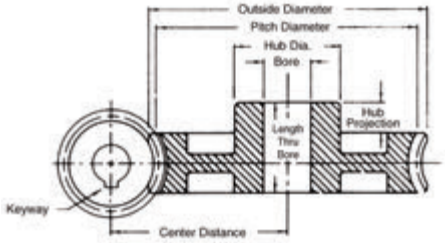

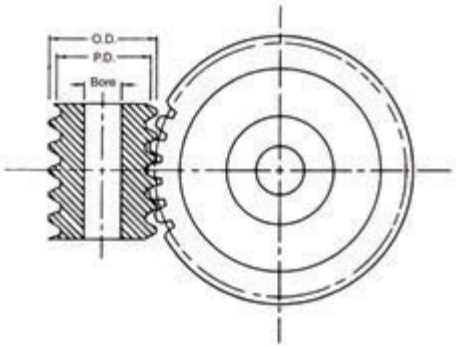

Cast Iron

No. Teeth	Catalog Number Cast Iron	Wt. Lbs. (App.)	Pitch Dia.	Bore (Inches)	Hub (Inches)		Style
					Dia.	Proj.	
20	W620	2.5	3.333	¾	1⅞	⅞	W
24	W624	3.6	4.000	¾	1⅞	⅞	W
30	W630	5.0	5.000	⅞	2¼	⅞	W
36	W636	6.0	6.000	1	2½	⅞	W
40	W640	7.6	6.667	1	2½	⅞	W
48	W648	9.2	8.000	1¼	2¾	1	W
60	W660	13.7	10.000	1¼	3	1¼	W
72	W672	14.9	12.000	1¼	3	1¼	W

W = WEB

Steel — 4° 46' Helix Angle Worms

Catalog Number Soft	Wt. Lbs. (App.)	Catalog Number Hardened	Wt. Lbs. (App.)	Face (Inches)	Pitch Dia.	Bore (Inches)	Hub (Inches)		Keyway (Inches)
							Dia.	Proj.	
W6	1.8	WG6	1.7	2½	2.000	⅞			3/16 × 3/32
WH6	2.7			2½	2.000	⅞	1 9/16	¾	3/16 × 3/32

Case hardened worms have ground and polished threads (Indicated by letter "G" in catalog number).
Please Note: Stock Bore sizes on ground worms may be difficult to modify.

Worm and Worm Gears
6 Pitch • 1" Face • 14½° Pressure Angle

Right Hand Double Thread (Stocked Right Hand Only)

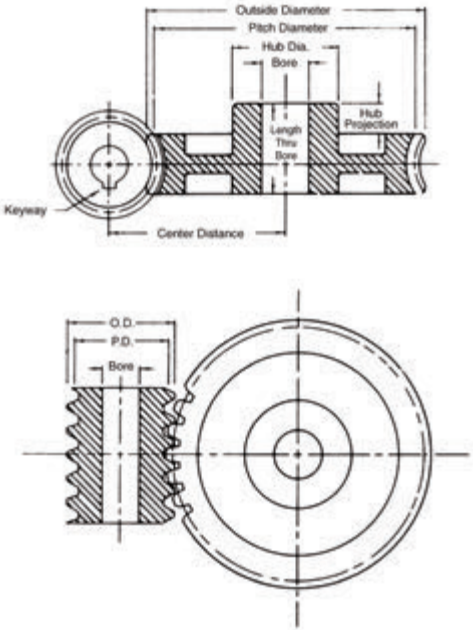

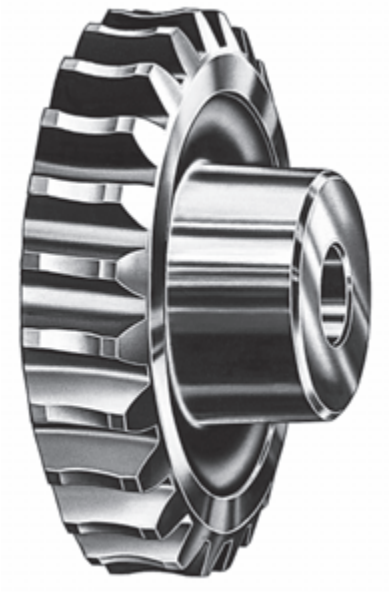

Cast Iron

Number Teeth	Catalog Number Cast Iron	Wt. Lbs. (App.)	Pitch Dia.	Bore (Inches)	Hub (Inches)		Style
					Dia.	Proj.	
20	W620D	3.3	3.333	1	2¾	1	PLAIN
24	W624D	4.1	4.000	1¼	2¾	1	PLAIN
30	W630D	5.2	5.000	1¼	2¾	1	W
40	W640D	7.6	6.667	1¼	2¾	1	W

W = WEB

Steel — 9° 28' Helix Angle Worms

Catalog Number Soft	Weight Pounds (App.)	Face (Inches)	Pitch Diameter	Bore (Inches)	Keyway (Inches)
W6D	1.6	2½	2.000	1	¼ × ⅛

Worm and Worm Gears
6 Pitch • 1" Face • 14½° Pressure Angle

Right Hand Quadruple Thread (Stocked Right Hand Only)

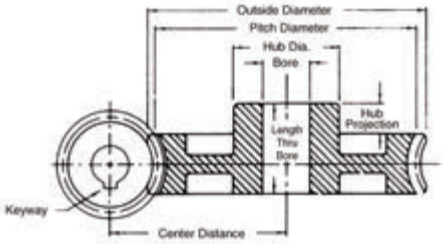

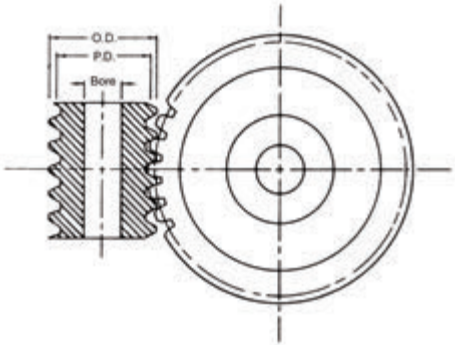

Cast Iron

Number Teeth	Catalog Number Cast Iron	Wt. Lbs. (App.)	Pitch Dia.	Bore (Inches)	Hub (Inches)		Style
					Dia.	Proj.	
20	W620Q	3.4	3.333	1	2¾	1	PLAIN
24	W624Q	4.1	4.000	1¼	2¾	1	PLAIN

Steel — 18° 26' Helix Angle Worms

Catalog Number Soft	Wt. Lbs. (App.)	Face (Inches)	Pitch Diameter	Bore (Inches)	Keyway (Inches)
W6Q	1.6	2½	2.000	1	¼ × ⅛

Worm and Worm Gears

8 Pitch • ¾" Face • 14½° Pressure Angle

Right Hand Single Thread (Stocked Right Hand Only)

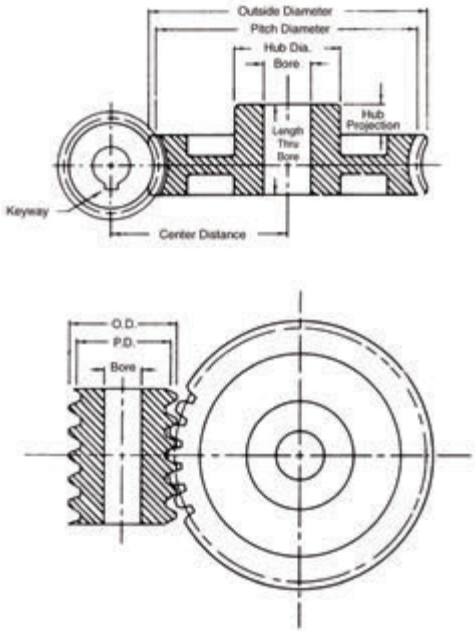

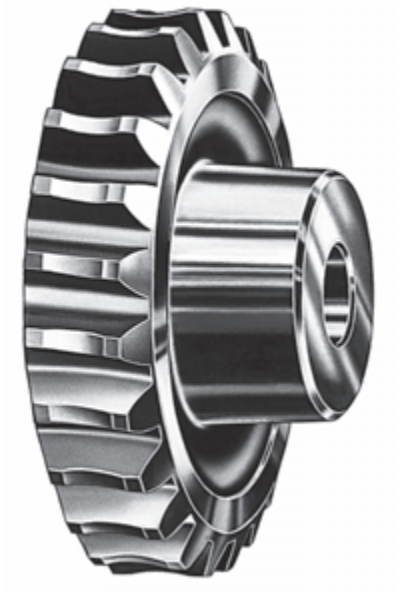

Cast Iron

Number Teeth	Catalog Number Cast Iron	Weight Pounds (App.)	Pitch Dia.	Bore (Inches)	Hub (Inches)		Style
					Dia.	Proj.	
20	W820	1.3	2.500	¾	1¾	¾	PLAIN
30	W830	2.4	3.750	¾	1¾	¾	W
40	W840	3.7	5.000	1	2⅜	⅞	W
48	W848	4.5	6.000	1	2⅜	⅞	W
50	W850	5.1	6.250	1	2½	⅞	W
60	W860	6.1	7.500	1	2½	⅞	W
80	W880	8.9	10.000	1¼	3	⅞	W

W = WEB

Steel — 4° 46' Helix Angle Worms

Catalog Number Soft	Weight Pounds (App.)	Catalog Number Hardened	Wt. Lbs. (App.)	Face (Inches)	Pitch Dia.	Bore (Inches)	Hub (Inches)		Keyway (Inches)
							Dia.	Proj.	
W8	0.64	WG8	0.62	1¾	1.500	¾			3/16 × 3/32
WH8	0.74			1¾	1.500	¾	1 3/16	⅝	

Case hardened worms have ground and polished threads (Indicated by letter "G" in catalog number).
Please Note: Stock Bore sizes on ground worms may be difficult to modify.

Worm and Worm Gears

8 Pitch • ¾" Face • 14½° Pressure Angle

Right Hand Double Thread (Stocked Right Hand Only)

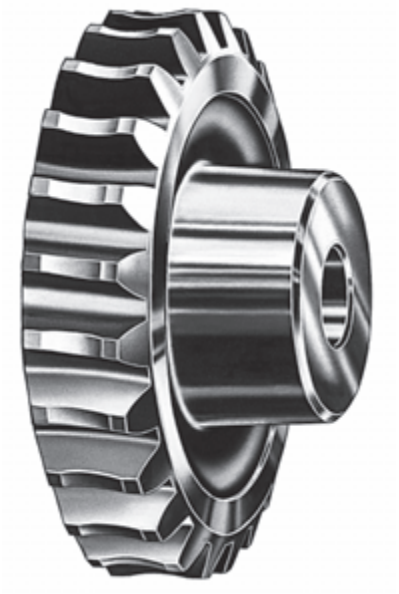

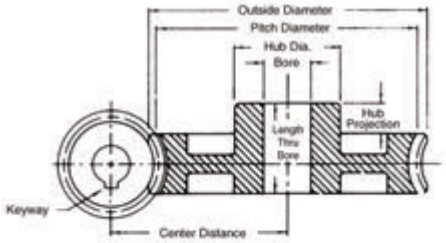

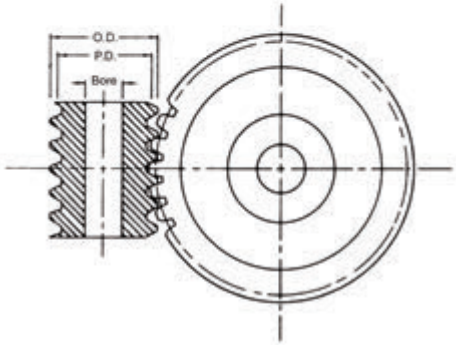

Cast Iron

Number Teeth	Catalog Number Cast Iron	Weight Pounds (App.)	Pitch Dia.	Bore (Inches)	Hub (Inches)		Style
					Dia.	Proj.	
20	W820D	1.2	2.500	1	2	¾	PLAIN
30	W830D	2.5	3.750	1	2¼	¾	W
40	W840D	3.4	5.000	1	2¼	¾	W

W = WEB

Steel — 9° 28' Helix Angle Worms

Catalog Number Soft	Weight Pounds (App.)	Catalog Number Hardened	Wt. Lbs. (App.)	Face (Inches)	Pitch Dia.	Bore (Inches)	Hub (Inches)		Keyway (Inches)
							Dia.	Proj.	
W8D	0.56	WG8D	0.54	1¾	1.500	⅞			3/16 × 3/32
WH8D	0.74			1¾	1.500	¾	1 3/16	⅝	

Case hardened worms have ground and polished threads (Indicated by letter "G" in catalog number).
Please Note: Stock Bore sizes on ground worms may be difficult to modify.

Worm and Worm Gears

8 Pitch • ¾" Face • 14½° Pressure Angle

Right Hand Quadruple Thread (Stocked Right Hand Only)

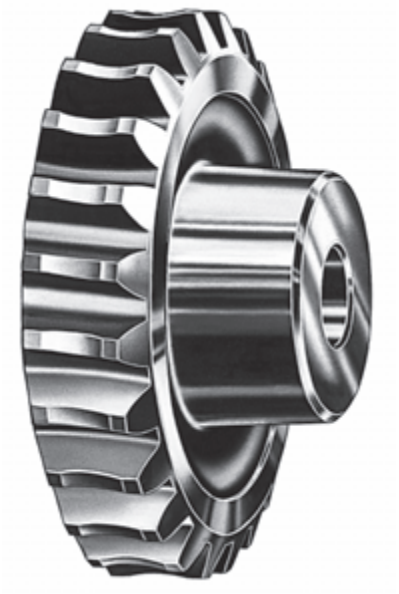

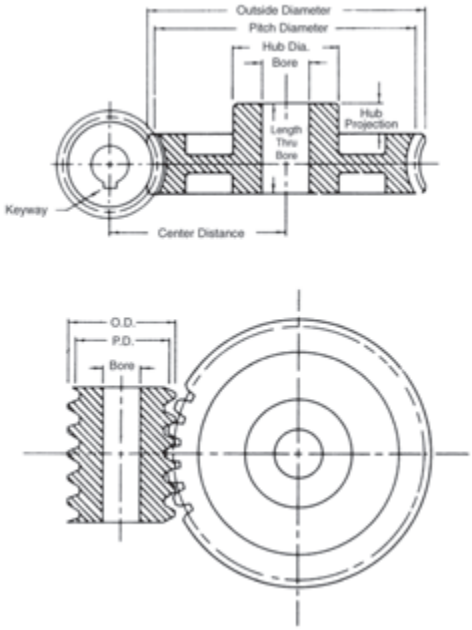

Cast Iron

Number Teeth	Catalog Number Cast Iron	Weight Lbs. (Approx.)	Pitch Dia.	Bore (Inches)	Hub (Inches)		Style
					Dia.	Proj.	
20	W820Q	1.2	2.500	1	2	¾	PLAIN
30	W830Q	2.5	3.750	1	2¼	¾	W

W = WEB

Steel — 18° 26' Helix Angle Worms

Catalog Number Cast Iron	Weight Lbs. (Approx.)	Face (Inches)	Pitch Dia.	Bore (Inches)	Hub (Inches)		Keyway (Inches)
					Dia.	Proj.	
W8Q	0.58	1¾	1.500	⅞			3/16 × 3/32
WH8Q	0.76	1¾	1.500	¾	1 3/16	⅝	

Worm and Worm Gears
10 Pitch • ⅝" Face • 14½° Pressure Angle

Right Hand Single Thread (Stocked Right Hand Only)

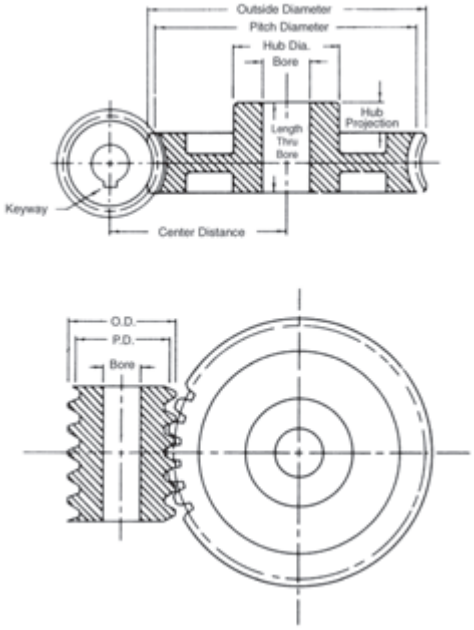

Cast Iron and Bronze

Number Teeth	Catalog Number Cast Iron	Weight Lbs. (Approx.)	Pitch Dia.	Bore (Inches)	Hub (Inches) Dia.	Hub (Inches) Proj.	Style	Catalog Number Bronze	Weight Lbs. (Approx.)
20	W1020	0.7	2.000	½	1¼	¾	PLAIN	WB1020	.8
30	W1030	1.5	3.000	⅝	1¾	¾	PLAIN	WB1030	1.7
40	W1040	1.8	4.000	⅝	1¾	¾	W	WB1040	2.4
50	W1050	2.8	5.000	¾	2	¾	W		
60	W1060	3.6	6.000	¾	2	¾	W		
80	W1080	4.8	8.000	¾	2	¾	W		
100	W10100	6.0	10.000	¾	2½	¾	W		

W = WEB

Steel — 4° 34' Helix Angle Worms

Catalog Number Soft	Weight Lbs. (Approx.)	Catalog Number Hardened	Weight Lbs. (Approx.)	Face (Inches)	Pitch Dia.	Bore (Inches)	Hub (Inches) Dia.	Hub (Inches) Proj.	Keyway (Inches)
W10	0.36	WG10	0.32	1⅜	1.250	⅝			3/16 × 3/32
WH10	0.42		0.38	1⅜	1.250	⅝	1	½	

Case hardened worms have ground and polished threads (Indicated by letter "G" in catalog number).
Please Note: Stock Bore sizes on ground worms may be difficult to modify.

Worm and Worm Gears

10 Pitch • ⅝" Face • 14½° Pressure Angle

Right Hand Double Thread (Stocked Right Hand Only)

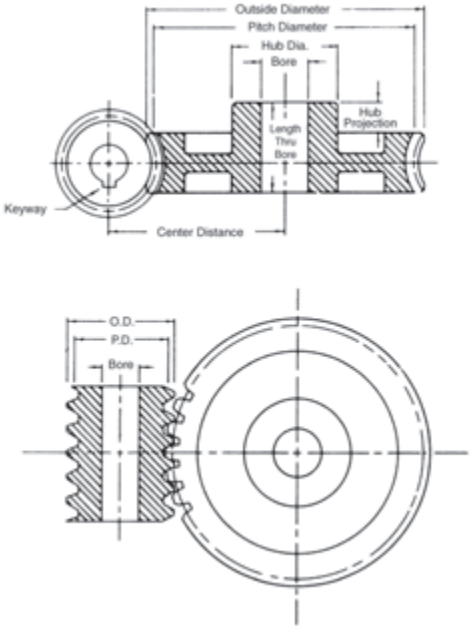

Cast Iron and Bronze

No. Teeth	Catalog Number Cast Iron	Weight Lbs. (Approx.)	Pitch Dia.	Bore (Inches)	Hub (Inches)		Style	Catalog Number Bronze	Weight Lbs. (Approx.)
					Dia.	Proj.			
20	W1020D	0.65	2.000	⅞	1⅝	⅝	PLAIN	WB1020D	0.75
30	W1030D	1.30	3.000	⅞	1¾	⅝	PLAIN	WB1030D	1.30
40	W1040D	1.60	4.000	⅞	1¾	⅝	W		
50	W1050D	2.90	5.000	⅞	2	1	W		
60	W1060D	3.00	6.000	⅞	2	1	W		

W = WEB

Steel — 9° 5' Helix Angle Worms

Catalog Number Soft	Weight Lbs. (Approx.)	Face (Inches)	Pitch Dia.	Bore (Inches)	Hub (Inches)		Keyway (Inches)
					Dia.	Proj.	
W10D	0.28	1⅜	1.2500	¾			3/16 × 3/32
WH10D	0.42	1⅜	1.2500	⅝	1	½	

Worm and Worm Gears
10 Pitch • ⅝" Face • 14½° Pressure Angle

Right Hand Quadruple Thread (Stocked Right Hand Only)

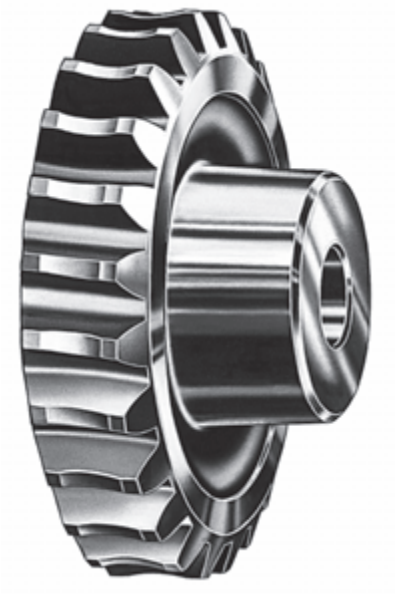

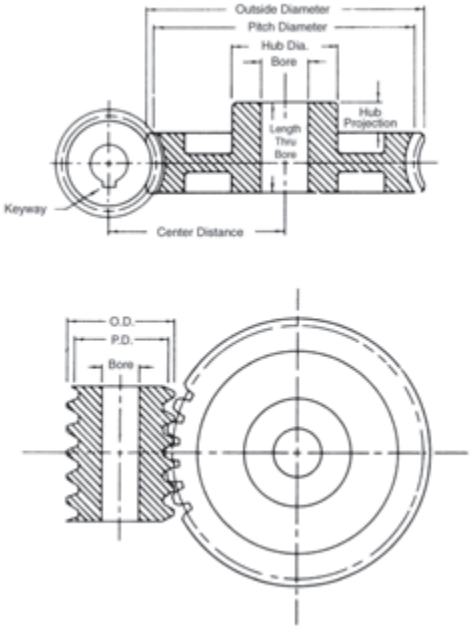

Cast Iron

Number Teeth	Catalog Number Cast Iron	Weight Lbs. (Approx.)	Pitch Dia.	Bore (Inches)	Hub (Inches) Dia.	Hub (Inches) Proj.	Style
20	W1020Q	0.64	2.000	⅞	1⅝	⅝	PLAIN
30	W1030Q	1.30	3.000	⅞	1¾	⅝	W
40	W1040Q	1.60	4.000	⅞	1¾	⅝	W

W = WEB

Steel — 17° 45' Helix Angle Worms

Catalog Number Soft	Weight Lbs. (Approx.)	Face (Inches)	Pitch Dia.	Bore (Inches)	Hub (Inches) Dia.	Hub (Inches) Proj.	Keyway (Inches)
W10Q	0.28	1⅜	1.250	¾			3/16 × 3/32
WH10Q	0.40	1⅜	1.250	⅝	1	½	

Worm and Worm Gears

12 Pitch • ½" Face • 14½° Pressure Angle

Right Hand Single Thread (Stocked Right Hand Only)

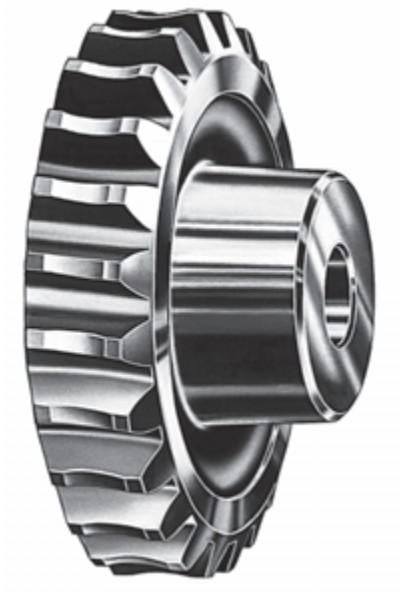

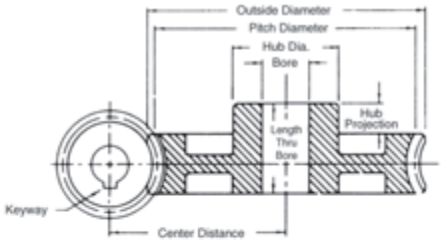

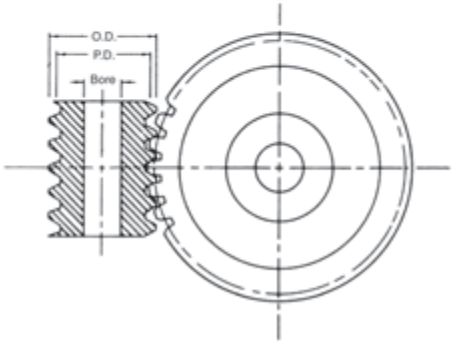

Cast Iron and Bronze

Number Teeth	Catalog Number Cast Iron	Weight Lbs. (Approx.)	Pitch Dia.	Bore (Inches)	Hub (Inches) Dia.	Hub (Inches) Proj.	Style	Catalog Number Bronze	Weight Lbs. (Approx.)
18	W1218	0.28	1.500	½	1¼	⅝	PLAIN		
20	W1220	0.35	1.667	½	1¼	⅝	PLAIN	WB1220	0.45
30	W1230	0.71	2.500	½	1¼	⅝	W		
40	W1240	1.20	3.333	⅝	1½	¾	W		
50	W1250	1.50	4.166	⅝	1½	¾	W		
60	W1260	2.00	5.000	⅝	1¾	¾	W		
80	W1280	3.90	6.666	⅝	2½	¾	W		
100	W12100	4.40	8.333	¾	2	¾	W		

W = WEB

Steel — 4° 46' Helix Angle Worms

Catalog Number Soft	Weight Lbs. (Approx.)	Catalog Number Hardened	Weight Lbs. (Apporx.)	Face (Inches)	Pitch Dia.	Bore (Inches)	Hub (Inches) Dia.	Hub (Inches) Proj.	Keyway (Inches)
W12	0.17	WG12	0.14	1⅛	1.000	½			⅛ × 1/16
WH12	0.20			1⅛	1.000	½	¾	⅜	

Case hardened worms have ground and polished threads (Indicated by letter "G" in catalog number).
Please Note: Stock Bore sizes on ground worms may be difficult to modify.

Worm and Worm Gears

12 Pitch • ½" Face • 14½° Pressure Angle

Right Hand Double Thread (Stocked Right Hand Only)

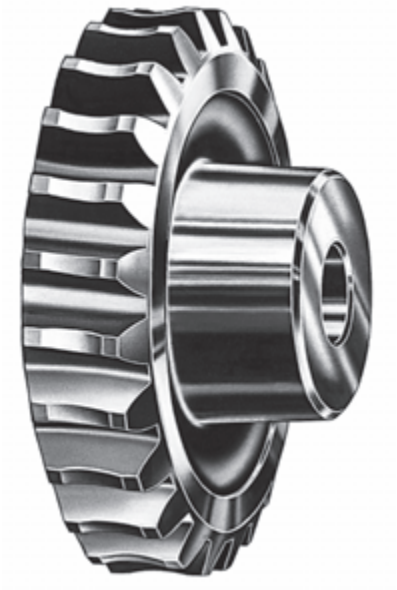

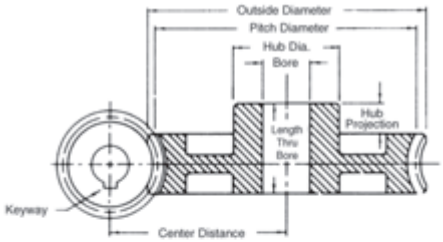

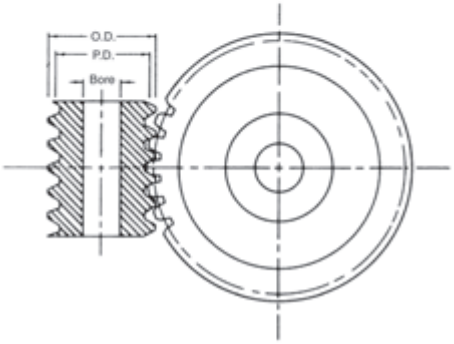

Cast Iron and Bronze

Number Teeth	Catalog Number Cast Iron	Weight Lbs. (Approx.)	Pitch Dia.	Bore (Inches)	Hub (Inches)		Style	Catalog Number Bronze	Weight Lbs. (Approx.)
					Dia.	Proj.			
20	W1220D	0.32	1.666	½	1¼	½	PLAIN	WB1220D	0.40
30	W1230D	0.78	2.500	¾	1½	⅝	PLAIN		
40	W1240D	1.30	3.333	¾	1¾	⅝	W		

W = WEB

Steel — 9° 28' Helix Angle Worms

Catalog Number Soft	Weight Lbs. (Approx.)	Catalog Number Hardened	Weight Lbs. (Approx.)	Face (Inches)	Pitch Dia.	Bore (Inches)	Hub (Inches)		Keyway (Inches)
							Dia.	Proj.	
W12D	0.14	WG12D	0.14	1⅛	1.000	⅝			⅛ × 1/16
WH12D	0.20			1⅛	1.000	½	¾	⅜	

Case hardened worms have ground and polished threads (Indicated by letter "G" in catalog number).
Please Note: Stock Bore sizes on ground worms may be difficult to modify.

Worm and Worm Gears

12 Pitch • ½" Face • 14½° Pressure Angle

Right Hand Quadruple Thread (Stocked Right Hand Only)

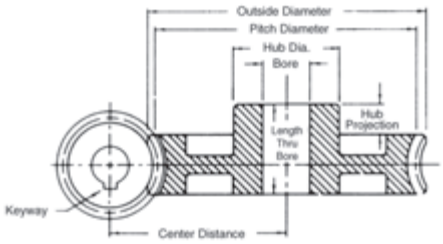

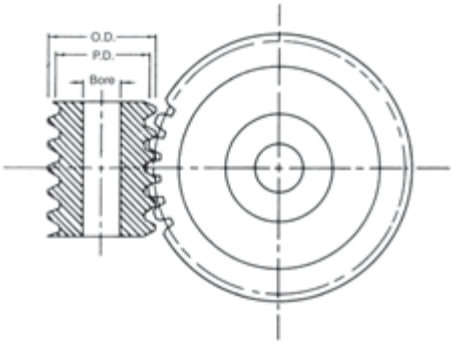

Cast Iron

Number Teeth	Catalog Number Cast Iron	Weight Lbs. (Approx.)	Pitch Dia.	Bore (Inches)	Hub (Inches)		Style
					Dia.	Proj.	
20	W1220Q	0.32	1.666	½	1¼	½	PLAIN
30	W1230Q	0.38	2.500	¾	1½	⅝	PLAIN
40	W1240Q	0.80	3.333	¾	1¾	⅝	W

W = WEB

Steel — 18° 26' Helix Angle Worms

Catalog Number Soft	Weight Lbs (Approx.)	Catalog Number Hardened	Weight Lbs (Approx.)	Face (Inches)	Pitch Dia.	Bore (Inches)	Hub (Inches)		Keyway (Inches)
							Dia.	Proj.	
W12Q	0.14	WG12Q	0.14	1⅛	1.000	⅝			⅛ × 1/16
WH12Q	0.20			1⅛	1.000	½	¾	⅜	

Worm and Worm Gears
16 Pitch • 5/16" Face • 14½° Pressure Angle

Right Hand Single Thread (Stocked Right Hand Only)

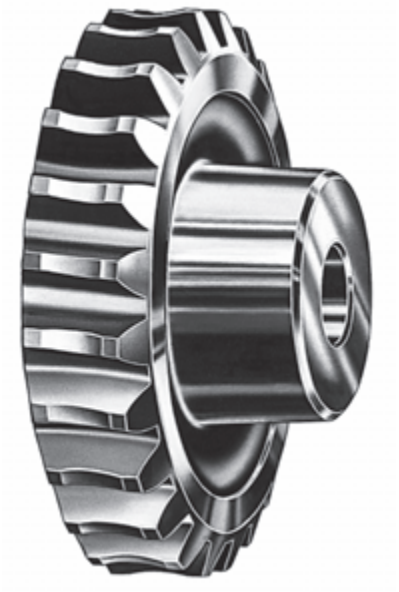

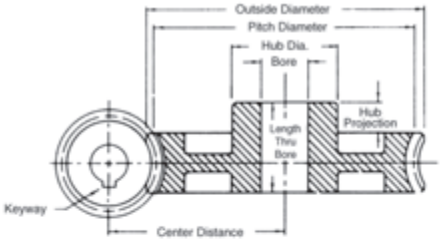

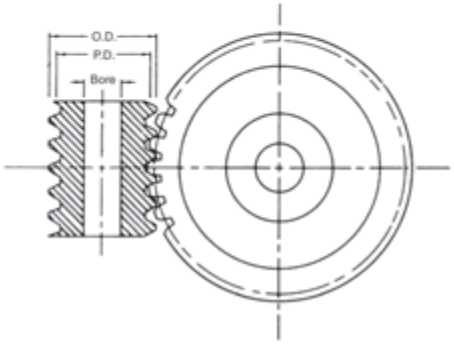

Bronze

Number Teeth	Catalog Number	Weight Lbs. (Approx.)	Pitch Dia.	Bore (Inches)	Hub (Inches)		Style
					Dia.	Proj.	
20	WB1620	0.13	1.250	¼	⅝	5/16	PLAIN
30	WB1630	0.28	1.875	5/16	¾	⅜	W
40	WB1640	0.42	2.500	5/16	¾	⅜	W
50	WB1650	0.50	3.125	⅜	⅞	7/16	W

W = WEB

Steel — 5° 43' Helix Angle Worms

Catalog Number Soft	Weight Lbs. (Approx.)	Catalog Number Hardened	Weight Lbs (Approx.)	Face (Inches)	Pitch Dia.	Bore (Inches)	Hub (Inches)	
							Dia.	Proj.
WH16	0.08			1	0.625	¼	0.46	¼
		WHG16	0.07	1	0.625	5/16	0.46	¼

Case hardened worms have ground and polished threads (Indicated by letter "G" in catalog number).
Please Note: Stock Bore sizes on ground worms may be difficult to modify.

Worm and Worm Gears

16 Pitch • 5/16" Face • 14½° Pressure Angle

Right Hand Double Thread (Stocked Right Hand Only)

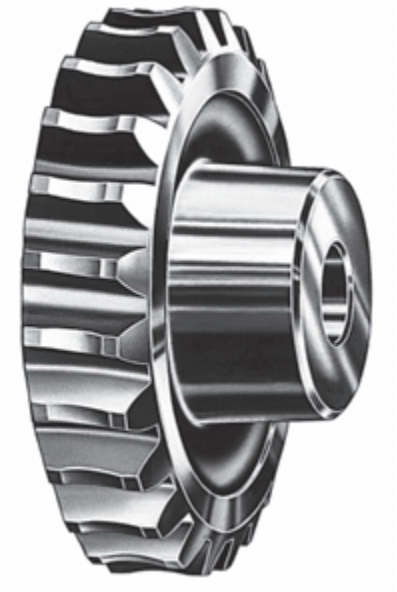

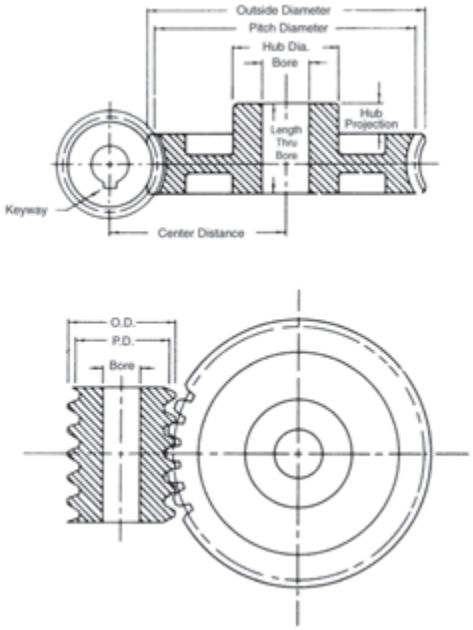

Bronze

Number Teeth	Catalog Number	Weight Lbs. (Approx.)	Pitch Dia.	Bore (Inches)	Hub (Inches)		Style
					Dia.	Proj.	
20	WB1620D	0.14	1.250	¼	⅝	5/16	PLAIN

Steel — 11° 19' Helix Angle Worms

Catalog Number Soft	Weight Lbs. (Approx.)	Face (Inches)	Pitch Dia.	Bore (Inches)	Hub (Inches)	
					Dia.	Proj.
WH16D	0.09	1	0.625	¼	0.46	¼

Worm and Worm Gears
16 Pitch • 5/16" Face • 20° Pressure Angle

Right Hand Quadruple Thread (Stocked Right Hand Only)

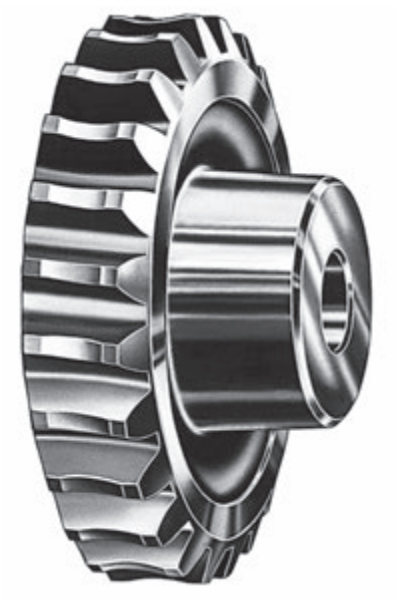

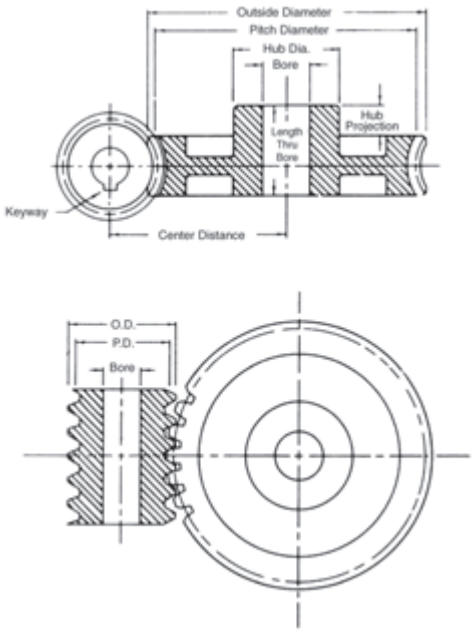

Bronze

Number Teeth	Catalog Number	Weight Lbs (Approx.)	Pitch Dia.	Bore (Inches)	Hub (Inches)		Style
					Dia.	Proj.	
20	WB1620Q	0.14	1.250	¼	⅝	5/16	PLAIN

Steel — 21° 48' Helix Angle Worms

Catalog Number Soft	Weight Lbs. (Approx.)	Face (Inches)	Pitch Dia.	Bore (Inches)	Hub (Inches)	
					Dia.	Proj.
WH16Q	0.08	1	0.625	¼	0.46	¼

Ratio-Center Distance Listings With Approximate Horsepower and Torque† Ratings for Hardened and Ground Worms With Bronze Worm Gears

RPM of Worm			1800		900		300		100	
Center			Input-Output		Input-Output		Input-Output		Input-Output	
Ratio	Distance	*Gear	HP	Torque	HP	Torque	HP	Torque	HP	Torque
5.00	0.938	WB1620Q	0.37	60	0.25	70	0.09	80	0.03	80
5.00	1.333	WB1220Q	0.80	130	0.55	170	0.25	200	0.08	215
5.00	1.625	WB1020Q	1.25	200	0.90	275	0.40	350	0.15	370
5.00	2.000	WB820Q	2.00	315	1.50	460	0.80	890	0.33	965
5.00	2.667	WB620Q	3.70	600	2.75	880	1.40	1280	0.55	1430
6.00	3.000	WB624Q	4.50	880	3.40	1300	1.75	1900	0.70	2180
7.50	1.250	WB1630Q	0.50	130	0.33	160	0.14	180	0.05	185
7.50	1.750	WB1230Q	1.25	300	0.85	390	0.33	460	0.13	490
7.50	2.125	WB1030Q	1.90	450	1.33	560	0.60	790	0.25	850
7.50	2.625	WB830Q	3.00	725	2.25	1060	1.00	1400	0.40	1520
7.50	3.500	WB630Q	5.75	1400	4.33	2060	2.20	2960	0.87	3330
9.67	4.050	WB529T	8.40	2615	6.25	3785	3.33	5730	1.33	6540
10.00	0.938	WB1620D	0.25	70	0.15	85	0.06	90	0.02	95
10.00	1.333	WB1220D	0.50	155	0.33	205	0.16	240	0.60	250
10.00	1.562	WB1640Q	0.75	240	0.50	285	0.18	320	0.06	330
10.00	1.625	WB1020D	0.80	230	0.60	325	0.25	400	0.10	430
10.00	2.000	WB820D	1.25	365	0.90	525	0.45	690	0.15	750
10.00	2.167	WB1240Q	1.67	530	1.10	700	0.50	830	0.17	880
10.00	2.625	WB1040Q	2.50	805	1.75	1120	0.80	1400	0.30	1500
10.00	2.667	WB620D	2.40	735	1.80	1075	0.95	1540	0.37	1700
10.00	3.250	WB840Q	4.00	1300	3.00	1880	1.40	2500	0.50	2700
10.00	4.333	WB640Q	7.75	2500	5.75	3675	3.00	5333	1.15	5980
12.00	3.000	WB624D	2.85	1050	2.20	1550	1.15	2200	0.45	2450
12.5	1.875	WB1650Q	0.95	375	0.60	445	0.25	500	0.08	515
12.5	2.583	WB1250Q	2.00	820	1.40	1080	0.60	1300	0.20	1370
12.5	3.125	WB1050Q	3.00	1250	2.25	1740	1.00	2200	0.33	2340
12.5	3.875	WB850Q	4.90	2000	3.70	2900	1.70	3840	0.65	4170
12.5	5.167	WB650Q	9.50	3800	7.00	5600	3.60	8200	1.40	9200
13.33	5.150	WB540T	11.00	4720	8.20	6830	4.40	10360	1.75	11800
15.00	1.250	WB1630D	0.33	155	0.25	180	0.08	200	0.03	210
15.00	1.750	WB1230D	0.75	350	0.50	450	0.25	535	0.07	560
15.00	2.125	WB1030D	1.20	520	0.87	725	0.37	900	0.15	965
15.00	2.188	WB1660Q	1.10	570	0.70	680	0.25	760	0.10	790
15.00	2.625	WB830D	1.67	750	1.25	1080	0.60	1415	0.25	1530
15.00	3.000	WB1260Q	2.50	1170	1.67	1540	0.70	1800	0.25	1930
15.00	3.500	WB630D	3.50	1620	2.70	2375	1.40	3370	0.55	3770
15.00	3.625	WB1060Q	3.75	1700	2.67	2500	1.17	3100	0.50	3300
15.00	4.500	WB860Q	5.75	2820	4.33	4100	2.00	5470	0.75	6000
15.00	6.000	WB660Q	11.33	5550	8.50	8000	4.33	11700	1.70	13100
16.67	6.150	WB550T	13.50	7250	10.00	10500	5.40	16000	2.20	18000
18.00	5.000	WB318	6.00	3100	4.67	4570	3.00	8000	1.50	10000
18.00	7.000	WB672Q	13.50	7800	10.00	11400	5.00	16500	2.00	18500
20.00	0.938	WB1620	0.15	75	0.10	90	0.04	100	0.02	105
20.00	1.333	WB1220	0.33	170	0.25	220	0.10	260	0.04	275
20.00	1.562	WB1640D	0.50	270	0.30	310	0.10	350	0.04	350
20.00	1.625	WB1020	0.50	250	0.33	350	0.20	440	0.07	470

* Ratings listed are for bronze worm gears operating with hardened and ground steel worms. For ratings of cast iron worm gears with hardened steel worm, multiply listed ratings by 30%. For cast iron with hardened and ground steel worm, multiply by 50%.
† Torque ratings in inch pounds.

Ratio-Center Distance Listings With Approximate Horsepower and Torque† Ratings for Hardened and Ground Worms With Bronze Worm Gears

RPM of Worm			1800		900		300		100	
Center			Input-Output		Input-Output		Input-Output		Input-Output	
Ratio	Distance	*Gear	HP	Torque	HP	Torque	HP	Torque	HP	Torque
20	2.000	WB820	0.75	400	0.60	600	0.33	775	0.12	850
20	2.167	WB1240D	1.00	600	0.67	775	0.33	920	0.10	970
20	2.625	WB1040D	1.50	900	0.85	1230	0.50	1500	0.20	1650
20	2.667	WB620	1.50	800	1.15	1170	0.75	1660	0.25	1850
20	2.812	WB1680Q	1.40	900	0.90	1075	0.33	1200	0.12	1240
20	3.250	WB840D	2.30	1400	1.75	2000	0.80	2580	0.33	2800
20	3.833	WB1280Q	3.12	2000	2.12	2600	0.90	3120	0.33	3300
20	4.000	WB420	3.50	2000	2.75	2880	1.75	4700	0.75	5600
20	4.333	WB640D	4.50	2780	3.40	4050	1.75	5800	0.70	6500
20	4.625	WB1080Q	4.75	3000	3.40	4250	1.50	5340	0.50	5700
20	5.750	WB880Q	7.50	4800	5.60	7000	2.60	9400	1.00	10200
20	7.667	WB680Q	15.00	9500	10.75	13800	5.50	20000	2.20	22500
24	3.000	WB624	1.75	1120	1.33	1630	0.75	2300	0.33	2600
24	4.500	WB424	4.00	2800	3.00	4000	2.00	6600	0.90	7800
24	6.000	WB324	7.50	5300	5.90	7750	3.90	13500	1.90	17000
25	1.875	WB1650D	0.50	370	0.33	470	0.12	520	0.05	540
25	2.583	WB1250D	1.20	890	0.80	1150	0.33	1380	0.12	1450
25	3.125	WB1050D	1.80	1340	1.33	1850	0.60	2300	0.25	2500
25	3.438	WB16100Q	1.75	1300	1.00	1575	0.40	1750	0.12	1800
25	3.875	WB850D	3.00	2200	2.25	3250	1.00	4200	0.40	4500
25	4.667	WB12100Q	3.67	2800	2.50	3660	1.00	4400	0.40	4630
25	5.167	WB650D	5.50	4000	4.00	6000	2.15	8700	0.87	9700
25	5.625	WB10100Q	5.70	4500	4.10	6380	1.75	8000	0.67	8500
25	7.000	WB8100Q	10.00	9700	7.00	11500	4.00	17500	1.25	19000
25	9.333	WB6100Q	17.50	14250	13.00	20750	6.66	30000	2.60	33000
29	4.050	WB529	3.50	2800	2.75	4200	1.50	6300	0.67	7000
30	1.250	WB1630	0.20	160	0.12	190	0.06	210	0.02	215
30	1.750	WB1230	0.50	350	0.33	450	0.15	540	0.06	570
30	2.125	WB1030	0.70	530	0.50	750	0.25	925	0.10	1000
30	2.188	WB1660	0.60	590	0.40	700	0.15	760	0.05	800
30	2.625	WB830	1.00	870	0.85	1260	0.40	1600	0.17	1750
30	3.000	WB1260D	1.33	1230	1.00	1600	0.40	1900	0.15	2000
30	3.500	WB630	2.00	1700	1.60	2430	0.87	3500	0.33	3800
30	3.625	WB1060D	2.00	1850	1.50	2500	0.70	3200	0.25	3430
30	4.500	WB860D	3.25	2900	2.50	4300	1.12	5650	0.50	6000
30	6.000	WB660D	6.30	5800	4.80	6075	2.50	12110	1.00	13510
30	7.000	WB330	9.05	7880	7.00	11570	4.60	20280	2.25	25560
32	5.500	WB432	5.15	4680	4.00	6750	2.50	11140	1.10	13200
36	4.000	WB636	2.33	2310	1.80	3380	1.00	4800	0.42	5360
36	7.000	WB672D	7.25	8010	5.50	11670	2.87	16700	1.15	18650
36	8.000	WB336	10.40	10900	8.10	15960	5.35	27950	2.60	35280
40	1.562	WB1640	0.25	266	0.12	330	0.07	350	0.02	360
40	2.167	WB1240	0.55	580	0.30	825	0.18	900	0.07	940
40	2.625	WB1040	0.87	890	0.65	1220	0.30	1520	0.12	1630
40	2.812	WB1680D	0.75	910	0.33	1140	0.20	1200	0.07	1230

* Ratings listed are for bronze worm gears operating with hardened and ground steel worms. For ratings of cast iron worm gears with hardened steel worm, multiply listed ratings by 30%. For cast iron with hardened and ground steel worm, multiply by 50%.
† Torque ratings in inch pounds.

Ratio-Center Distance Listings With Approximate Horsepower and Torque† Ratings for Hardened and Ground Worms With Bronze Worm Gears

RPM of Worm			1800		900		300		100	
Center			Input-Output		Input-Output		Input-Output		Input-Output	
Ratio	Distance	*Gear	HP	Torque	HP	Torque	HP	Torque	HP	Torque
40	3.250	WB840	1.35	1440	0.85	2350	0.50	2700	0.20	2900
40	3.833	WB1280D	1.70	2040	1.15	2675	0.50	3160	0.20	3330
40	4.333	WB640	2.50	2770	2.00	4033	1.00	5760	0.45	6420
40	4.625	WB1080D	2.60	3070	1.90	4270	0.85	5315	0.33	5680
40	5.150	WB540	4.33	4930	3.40	7145	2.00	10725	0.83	12170
40	5.750	WB880D	4.00	4740	3.00	6850	1.40	8940	0.55	9680
40	6.500	WB440	6.00	5520	4.65	7950	3.00	13200	1.33	15480
40	7.667	WB680D	7.83	9600	6.00	14000	3.00	20025	1.25	22340
48	3.750	WB848	1.50	1950	1.20	2820	0.60	3650	0.25	3960
48	5.000	WB648	2.80	3730	2.25	5460	1.25	7750	0.50	8640
48	7.500	WB448	6.80	9320	5.25	13400	3.33	22200	1.50	26160
48	10.000	WB348	12.70	17640	9.87	25920	6.50	45360	3.16	57120
50	1.875	WB1650	0.30	380	0.20	450	0.08	490	0.03	515
50	2.583	WB1250	0.66	840	0.50	1090	0.20	1300	0.08	1360
50	3.125	WB1050	1.00	1280	0.75	1770	0.33	2200	0.14	2340
50	3.438	WB16100D	0.90	1290	0.50	1525	0.25	1690	0.08	1730
50	3.875	WB850	1.60	2140	1.25	3130	0.66	4090	0.25	4430
50	4.667	WB12100D	2.00	2875	1.33	3600	0.50	4460	0.22	4700
50	5.167	WB650	2.90	4000	2.25	5825	1.25	8310	0.50	9260
50	5.625	WB10100D	3.00	4440	2.16	6110	1.00	7675	0.33	8000
50	6.150	WB550	5.12	7120	4.00	10320	2.25	15480	1.00	17570
50	7.000	WB8100D	4.10	5000	2.75	7500	1.50	8000	0.60	10000
50	9.333	WB6100D	9.00	13800	6.75	20200	3.50	28930	1.40	32280
54	11.000	WB354	13.50	21230	10.50	31200	7.00	54480	3.33	68760
59	7.050	WB559	5.50	9230	4.50	13900	2.50	20075	1.00	23160
60	2.188	WB1660	0.33	550	0.20	650	0.08	720	0.03	740
60	3.000	WB1260	0.75	1100	0.50	1440	0.25	1700	0.09	1790
60	3.625	WB1060	1.00	1690	0.80	2330	0.33	2890	0.16	3080
60	4.500	WB860	1.66	2660	1.33	3900	0.66	5090	0.25	5500
60	6.000	WB660	3.20	5240	2.50	7670	1.40	1080	0.60	1225
64	9.500	WB464	7.87	14280	6.00	20640	3.80	34080	1.70	40320
72	7.000	WB672	3.33	6610	2.50	9660	1.50	13700	0.60	15360
80	2.812	WB1680	0.33	705	0.22	830	0.09	920	0.04	950
80	3.833	WB1280	0.75	1550	0.50	2030	0.25	2375	0.10	2520
80	4.625	WB1080	1.15	2375	0.87	3275	0.40	4050	0.16	4330
80	5.750	WB880	1.80	3800	1.40	5500	0.70	7140	0.30	7750
80	7.667	WB680	3.33	7380	2.66	10750	1.50	15350	0.60	17110
96	6.750	WB896	1.50	4200	1.00	6000	0.50	7000	0.20	8500
96	9.000	WB696	3.25	8490	2.50	12370	1.33	17660	0.50	19680
100	3.438	WB16100	0.33	810	0.20	960	0.09	1060	0.33	1100
100	4.667	WB12100	0.75	1790	0.50	2330	0.25	2730	0.90	2800
100	5.625	WB10100	1.00	2780	0.80	3850	0.33	4775	0.16	5100
100	7.000	WB8100	1.67	4450	1.25	6300	0.67	8000	0.24	9000
100	9.333	WB6100	3.20	8700	2.50	12675	1.33	18090	0.55	20160

* Ratings listed are for bronze worm gears operating with hardened and ground steel worms. For ratings of cast iron worm gears with hardened steel worm, multiply listed ratings by 30%. For cast iron with hardened and ground steel worm, multiply by 50%.
† Torque ratings in inch pounds.

Gear Standards

Quality is the most important factor in buying a gear. We have established Standards and Tolerances to insure our customers of accurate, dependable and long-lasting gears. All gears are checked with precision pins to assure correct backlash and center distances.

BACKLASH: The recommended backlash for mating gears when assembled is:

3 DP	.009 — .014	10 DP	.003 — .005
4 DP	.007 — .011	12 DP	.003 — .005
5 DP	.006 — .009	16 DP	.002 — .004
6 DP	.005 — .008	20 DP	.002 — .004
8 DP	.004 — .006	24 DP	.002 — .004

CONCENTRICITY of pitch line with bore (Total Indicator Reading) is held within:

3 DP	.006	10 DP	.0040
4 DP	.006	12 DP	.0040
5 DP	.005	16 DP	.0025
6 DP	.005	20 DP	.0025
8 DP	.005	24 DP	.0025

Stock bores are reamed, honed or ground to a smooth finish and standard commercial tolerances or closer. For rust prevention on distributor's shelf and for better appearance when received by the user, all stock gears go through a special finishing process. They present a pleasing appearance when on display or on the shelf. They are not boxed. All gears are identified by part numbers.

Gear Engineering Data

Spur Gear
Gear Formulas
Drive Selection
Horsepower and Torque
Tables

Stock Spur Gear Drive Selection

When designing a stock gear drive using the horsepower tables in this catalog, the following steps must be taken:

I. Find out these five necessary things:

a. Exact center distance in inches
b. Ratio and speeds
c. Service factor (from page G-84)
d. Actual horsepower
e. Bore sizes of both gears

II. Determine Design Horsepower using formula:

$$DHP = HP \times SF$$

Where: DHP = Design Horsepower

HP = Actual Horsepower

SF = Service Factor (from page G-84)

III. Determine Pitch Diameters using the formulas:

$$PD_1 = \frac{CD \times 2}{Ratio + 1}$$

$$PD_2 = PD_1 \times Ratio$$

Where: PD_1 = Pitch Diameter of Pinion (small gear)

PD_2 = Pitch Diameter of Gear (large gear)

CD = Center Distance

IV. Check the Center Distance:

$$CD = \frac{PD_1 + PD_2}{2}$$

V. Select Pitch from Horsepower tables on pages G-25 — G-27.

VI. Check Selected pitch for necessary Pitch Diameters.

VII. Check Horsepower capacity of Large Gear.

VIII. Check maximum bore capacity of selected Gears.

Spur Gear Drive Selection II (Other Than Stock)

When designing a gear drive when horsepower and speeds exceed the stock gear tables on pages G-25 – G-27, the following steps must be taken:

I. We must obtain all of the following data:

a. Exact center distance in inches
b. Ratio and speeds
c. Service factor (from page G-84)
d. Actual horsepower
e. Bore sizes of both gears

II. Determine Design Horsepower using formula:

$$DHP = HP \times SF$$

Where: DHP = Design Horsepower

HP = Actual Horsepower

SF = Service Factor (from page G-84)

III. Determine Pitch Diameters using the formulas:

$$PD_1 = \frac{CD \times 2}{Ratio + 1}$$

$$PD_2 = PD_1 \times Ratio$$

Where: PD_1 = Pitch Diameter of Pinion (small gear)

PD_2 = Pitch Diameter of Gear (large gear)

CD = Center Distance

IV. Determine velocity using the formula:

$$V = .262 \times PD \times RPM$$

Where: V = Velocity in feet per minute @ pitch line

PD = Pitch Diameter

RPM = Revolutions per minute of either gear*

V. Determine approximate pitch using the formula:

$$DP = \sqrt{\frac{3.1416 \times S \times 3 \times V \times .25}{DHP \times 27.5\ (1200 + V)}}$$

Where: DP = Diametral Pitch

S = Safe Static Stress per Square Inch of material (see table one, page G-84)

V = Velocity in FPM

DHP = Design Horsepower

Note: To round off answers, go to the nearest DP (standard DP's larger than 3 DP are: 1 DP, 1¼ DP, 1½ DP, 1¾ DP, 2 DP, 2½ DP)

VI. Determine number of teeth on both gears:

$$N = PD \times DP$$

Where: N = Number of teeth

PD = Pitch Diameter of gear

DP = Diametral Pitch of gear

NOTE: Velocities of both gears will always be the same. When using the above formula make sure to use the proper speed (RPM) with the proper pitch diameter.

Spur Gear Drive Selection II (Other Than Stock)

VII. Determine Face Width:

$$F = DP \frac{\left(\frac{DHP \times 33{,}000}{V}\right)}{SY\left(\frac{600}{600 + V}\right)}$$

Where: F = Face Width

DP = Diametral Pitch

V = Velocity in FPM

S = Safe Static Stress per Square Inch of material (Table 1, page G-84)

Y = Outline formula from Table 2, page G-84

Note: To round off each answer, go to the next one inch.

VIII. Check HP rating of selected pinion using the formula:

$$HP = \frac{LV}{33{,}000}$$

Where: $L = \frac{SYF}{DP} \times \frac{600}{600 + V}$

From horsepower formulas on page G-83.

Note: If the horsepower capacity is below the design horsepower, the following options can be taken:

A. Harden pinion (check gear HP capacity first)
B. Increase face
C. Increase pitch

Center Distance, Pitch Diameters and Ratios of Spur Gears

To determine the pitch diameters of a gear set, we must find two basic things:

1. Required ratio
2. Required center distance

Knowing this, first figure out the pitch diameter of the pinion (smaller gear) using the formula:

$$PD_1 = \frac{CD \times 2}{Ratio + 1}$$

Where: PD_1 = Pitch Diameter of the Pinion

CD = Center Distance

Then, find the pitch diameter of the larger gear, PD_2, by using the formula:

$$PD_2 = PD_1 \times Ratio$$

Then check the center distance by using the formula:

$$CD = \frac{PD_1 + PD_2}{2}$$

Horsepower Formulas

See page G-84 for tables one, two and three

Engineering Data
Lewis Formula (with Barth Revision)

L = Load in pounds at pitch line

S = Safe static stress per square inch of material (see table one)

DP = Diametral Pitch

F = Face width of gear

Y = Strength factor based on Pressure Angle and Number of Teeth (See table two)

V = Velocity in feet per minute
$V = .262 \times PD \times RPM$

PD = Pitch Diameter

RPM = Revolutions Per Minute

HP = Horsepower

$$L = \frac{SFY}{DP} \times \frac{600}{600 + V}$$

Maximum allowable torque (T) that should be imposed on a gear will be the safe tooth load (L) multiplied by

$$\frac{DP}{2} \text{ or } T = \frac{L \times PD}{2}$$

The safe Horsepower capacity of the gear (at a given RPM) can be calculated from $HP = \frac{T \times RPM}{63{,}025}$

or directly from (L) and (V):

$$^{*}HP = \frac{LV}{33{,}000}$$

$$\text{For a known HP, } T = \frac{63025 \times HP}{RPM}$$

For NON-METALLIC GEARS, the modified Lewis Formula shown below may be used with (S) values of 6000 PSI for Phenolic Laminated material.

$$L = \frac{SFY}{DP}\left(\frac{150}{200 + V} + .25\right)$$

* Apply SERVICE FACTOR (table three) for required horsepower.

Gear Standards

Table One
(S) Average values in pounds per square inch

Material	S
Steel — .40 Carbon — .20 Carbon	25000 20000
Steel — .40 Carbon Heat Treated Cast Iron	35000 12000
Bronze Non-Metallic	10000 6000

Table Two
Outline factor Y for use with Diametral Pitch

Number of Teeth	14½ P.A. Involute	20 P.A. Involute	Number of Teeth	14½ P.A. Involute	20 P.A. Involute
10	.176	.201	26	.308	.344
11	.192	.226	28	.314	.352
12	.210	.245	30	.318	.358
13	.223	.264	35	.327	.373
14	.235	.276	40	.336	.389
15	.245	.289	45	.340	.399
16	.255	.295	50	.346	.408
17	.264	.302	60	.355	.421
18	.270	.308	70	.360	.429
19	.277	.314	80	.363	.436
20	.283	.320	90	.366	.442
21	.289	.326	100	.368	.446
22	.292	.330	150	.375	.458
23	.296	.333	200	.378	.463
24	.302	.337	RACK	.390	.484
25	.305	.340			

Table Three
Service factors
Multiply required horsepower by service factor recommended for type of service

Type of Load	Intermittent or 3 Hours per Day	8-10 Hours per Day	Continuous 24 Hours per Day
UNIFORM LIGHT SHOCK	0.80 1.00	1.00 1.25	1.25 1.50
MEDIUM SHOCK HEAVY SHOCK	1.25 1.50	1.50 1.80	1.80 2.00

Spur Gear Dimensional Formulas Diametral Pitch

Rules and Formulas For Spur Gear Calculations

Diametral Pitch
Diametral Pitch is the Number of Teeth to Each Inch of the Pitch Diameter.

To Find	Having	Rule	Formula
The Diametrical Pitch	The Circular Pitch	Divide 3.1416 by the Circular Pitch	$DP = \frac{3.1416}{CP}$
The Diametrical Pitch	The Pitch Diameter and the Number of Teeth	Divide the Number of Teeth by Pitch Diameter	$DP = \frac{N}{PD}$
The Diametrical Pitch	The Outside Diameter and Number of Teeth	Divide the Number of Teeth plus 2 by Outside Diameter	$DP = \frac{N+2}{D}$
Pitch Diameter	The Number of Teeth and the Diametral Pitch	Divide Number of Teeth by the Diametral Pitch	$PD = \frac{N}{DP}$
Pitch Diameter	The Number of Teeth and Outside Diameter	Divide the product of Outside Diameter and Number of Teeth by Number of Teeth plus 2	$PD = \frac{OD \times N}{N+2}$
Pitch Diameter	The Outside Diameter and the Diametral Pitch	Subtract from the Outside Diameter the Quotient of 2 Divided by the Diametral Pitch	$PD = OD - (2 \div DP)$
Pitch Diameter	Addendum and the Number of Teeth	Multiply Addendum by the Number of Teeth	$PD = s \times N$
Outside Diameter	The Number of Teeth and the Diametral Pitch	Divide number of Teeth plus 2 by the Diametral Pitch	$OD = \frac{N+2}{DP}$
Outside Diameter	The Pitch Diameter and the Diametral Pitch	Add to the Pitch Diameter the quotient of 2 divided by the Diametral Pitch	$D = PD + \frac{2}{P}$
Outside Diameter	The Pitch Diameter and the Number of Teeth	Divide the Number of Teeth plus 2 by the quotient of Number of Teeth divided by Pitch Diameter	$D = \frac{N+2}{N \div PD}$
Outside Diameter	The Number of Teeth and Addendum	Multiply the Number of Teeth plus 2 by Addendum	$D = (N+2)A$
Number of Teeth	The Pitch Diameter and the Diametral Pitch	Multiply the Pitch Diameter by the Diametral Pitch	$N = PD \times DP$
Number of Teeth	The Outside Diameter and the Diametral Pitch	Multiply Outside Diameter by the Diametral Pitch and subtract 2	$N = DP - 2$
Thickness of Tooth	The Diametral Pitch	Divide 1.5708 by the Diametral Pitch	$t = \frac{1.5708}{DP}$
Addendum	The Diametral Pitch	Divide 1 by the Diametral Pitch	$A = \frac{1}{DP}$
Dedendum	The Diametral Pitch	Divide 1.157 by the Diametral Pitch	$A+L = \frac{1.157}{DP}$
Working Depth	The Diametral Pitch	Divide 2 by the Diametral Pitch	$WD = \frac{2}{DP}$
Whole Depth	The Diametral Pitch	Divide 2.157 by the Diametral Pitch	$WD = \frac{2.157}{DP}$
Clearance	The Diametral Pitch	Divide .157 by the Diametral Pitch	$L = \frac{.157}{DP}$
Clearance	Thickness of Tooth	Divide Thickness of Tooth at Pitch Line by 10	$L = \frac{t}{10}$

NOTE: Rules and Formulas Relating to Tooth Depth and Outside Diameter Apply to Full-Depth, Equal Addendum Gears.

Diametral Pitch
Tooth Dimensions

Dimensions of Standard Full-depth Teeth

Diametral Pitches and Equivalent Circular Pitches

Diametral Pitch	Circular Pitch	Module	Arc Thickness of Tooth on Pitch Line	Addendum	Working Depth of Tooth	Dedendum or Depth of Space Below Pitch Line	Whole Depth of Tooth*
½	6.2832	50.8	3.1416	2.0000	4.0000	2.3142	4.3142
¾	4.1888	33.8667	2.0944	1.3333	2.6666	1.5428	2.8761
1	3.1416	25.4	1.5708	1.0000	2.0000	1.1571	2.1571
1¼	2.5133	20.32	1.2566	0.8000	1.6000	0.9257	1.7257
1½	2.0944	16.9333	1.0472	0.6666	1.3333	0.7714	1.4381
1¾	1.7952	14.5143	0.8976	0.5714	1.1429	0.6612	1.2326
2	1.5708	12.7	0.7854	0.5000	1.0000	0.5785	1.0785
2¼	1.3963	11.2889	0.6981	0.4444	0.8888	0.5143	0.9587
2½	1.2566	10.16	0.6283	0.4000	0.8000	0.4628	0.8628
2¾	1.1424	9.2364	0.5712	0.3636	0.7273	0.4208	0.7844
3	1.0472	8.4667	0.5236	0.3333	0.6666	0.3857	0.7190
3½	0.8976	7.2571	0.4488	0.2857	0.5714	0.3306	0.6163
4	0.7854	6.35	0.3927	0.2500	0.5000	0.2893	0.5393
5	0.6283	5.08	0.3142	0.2000	0.4000	0.2314	0.4314
6	0.5236	4.2333	0.2618	0.1666	0.3333	0.1928	0.3595
7	0.4488	3.6286	0.2244	0.1429	0.2857	0.1653	0.3081
8	0.3927	3.175	0.1963	0.1250	0.2500	0.1446	0.2696
9	0.3491	2.8222	0.1745	0.1111	0.2222	0.1286	0.2397
10	0.3142	2.54	0.1571	0.1000	0.2000	0.1157	0.2157
11	0.2856	2.3091	0.1428	0.0909	0.1818	0.1052	0.1961
12	0.2618	2.1167	0.1309	0.0833	0.1666	0.0964	0.1798
13	0.2417	1.9538	0.1208	0.0769	0.1538	0.0890	0.1659
14	0.2244	1.8143	0.1122	0.0714	0.1429	0.0826	0.1541
15	0.2094	1.6933	0.1047	0.0666	0.1333	0.0771	0.1438
16	0.1963	1.5875	0.0982	0.0625	0.1250	0.0723	0.1348
17	0.1848	1.4941	0.0924	0.0588	0.1176	0.0681	0.1269
18	0.1745	1.4111	0.0873	0.0555	0.1111	0.0643	0.1198
19	0.1653	1.3368	0.0827	0.0526	0.1053	0.0609	0.1135
20	0.1571	1.27	0.0785	0.0500	0.1000	0.0579	0.1079
22	0.1428	1.1545	0.0714	0.0455	0.0909	0.0526	0.0980
24	0.1309	1.0583	0.0654	0.0417	0.0833	0.0482	0.0898
26	0.1208	0.9769	0.0604	0.0385	0.0769	0.0445	0.0829
28	0.1122	0.9071	0.0561	0.0357	0.0714	0.0413	0.0770
30	0.1047	0.8467	0.0524	0.0333	0.0666	0.0386	0.0719
32	0.0982	0.7938	0.0491	0.0312	0.0625	0.0362	0.0674
34	0.0924	0.7471	0.0462	0.0294	0.0588	0.0340	0.0634
36	0.0873	0.7056	0.0436	0.0278	0.0555	0.0321	0.0599
38	0.0827	0.6684	0.0413	0.0263	0.0526	0.0304	0.0568
40	0.0785	0.635	0.0393	0.0250	0.0500	0.0289	0.0539

*NOTE: Dimensions listed are for HOB CUT TEETH ONLY. Shaper cut teeth may be slightly larger. Consult factory for exact measurement.

All Gears In Stock Are Diametral Pitch

Spur Gear Dimensional Formulas Circular Pitch

Rules and Formulas For Spur Gear Calculations

Circular Pitch

Circular Pitch is the Distance from the Center of One Tooth to the Center of the Next Tooth, Measured Along the Pitch Circle.

To Find	Having	Rule	Formula
The Circular Pitch	The Diametral Pitch	Divide 3.1416 by the Diametral Pitch	$CP = \frac{3.1416}{DP}$
The Circular Pitch	The Pitch Diameter and the Number of Teeth	Divide Pitch Diameter by the product of .3183 and Number of Teeth	$CP = \frac{PD}{.3183N}$
The Circular Pitch	The Outside Diameter and the Number of Teeth	Divide Outside Diameter by the product of .3183 and Number of Teeth plus 2	$CP = \frac{OD}{.3183\ N + 2}$
Pitch Diameter	The Number of Teeth and the Circular Pitch	The continued product of the Number of Teeth, the Circular Pitch and .3183	PD = N X CP .3183
Pitch Diameter	The Number of Teeth and the Outside Diameter	Divide the product of Number of Teeth and Outside Diameter by Number of Teeth plus 2	$PD = \frac{N \times OD}{N + 2}$
Pitch Diameter	The Outside Diameter and the Circular Pitch	Subtract from the Outside Diameter the product of the Circular Pitch and .6366	PD = OD – (CP .6366)
Pitch Diameter	Addendum and the Number of Teeth	Multiply the Number of Teeth by the Addendum	PD = NA
Outside Diameter	The Number of Teeth and the Circular Pitch	The continued product of the Number of Teeth plus 2, the Circular Pitch and .3183	D = (N + 2) CP .3183
Outside Diameter	The Pitch Diameter and the Circular Pitch	Add to the Pitch Diameter the product of the Circular Pitch and .6366	D = PD + (CP .6366)
Outside Diameter	The Number of Teeth and the Addendum	Multiply Addendum by Number of Teeth plus 2	D = A (N + 2)
Number of Teeth	The Pitch Diameter and the Circular Pitch	Divide the product of Pitch Diameter and 3.1416 by the Circular Pitch	$N = \frac{PD\ 3.1416}{CP}$
Thickness of Tooth	The Circular Pitch	One-half the Circular Pitch	$t = \frac{CP}{2}$
Addendum	The Circular Pitch	Multiply the Circular Pitch by .3183 or $s = \frac{DP}{N}$	A = CP × .3183
Dedendum	The Circular Pitch	Multiply the Circular Pitch by .3683	A + L = CP × .3683
Working Depth	The Circular Pitch	Multiply the Circular Pitch by .6366	WD = CP × .6366
Whole Depth	The Circular Pitch	Multiply the Circular Pitch by .6866	D = CP × .6866
Clearance	The Circular Pitch	Multiply the Circular Pitch by .05	L = C × .05
Clearance	Thickness of Tooth	One-Tenth theThickness of Tooth at Pitch Line	$L = \frac{t}{10}$

NOTE: Rules and Formulas Relating to Tooth Depth and Outside Diameter Apply to Full-Depth, Equal Addendum Gears.

Circular Pitch Gears Made To Order Only

Circular Pitch
Tooth Dimensions

Dimensions of Standard Full-depth Teeth

Circular Pitches and Equivalent Diametral Pitches

Circular Pitch	Diametral Pitch	Module	Arc Thickness of Tooth on Pitch Line	Addendum	Working Depth of Tooth	Dedendum or Depth of Space Below Pitch Line	Whole Depth of Tooth
4	0.7854	32.3402	2.0000	1.2732	2.5464	1.4732	2.7464
3½	0.8976	28.2581	1.7500	1.1140	2.2281	1.2890	2.4031
3	1.0472	24.2552	1.5000	0.9549	1.9098	1.1049	2.0598
2¾	1.1424	22.2339	1.3750	0.8753	1.7506	1.0128	1.8881
2½	1.2566	20.2117	1.2500	0.7957	1.5915	0.9207	1.7165
2¼	1.3963	18.1913	1.1250	0.7162	1.4323	0.8287	1.5448
2	1.5708	16.1701	1.0000	0.6366	1.2732	0.7366	1.3732
1⅞	1.6755	15.1595	0.9375	0.5968	1.1937	0.6906	1.2874
1¾	1.7952	14.1488	0.8750	0.5570	1.1141	0.6445	1.2016
1⅝	1.9333	13.1382	0.8125	0.5173	1.0345	0.5985	1.1158
1½	2.0944	12.1276	0.7500	0.4775	0.9549	0.5525	1.0299
1 7/16	2.1855	11.6223	0.7187	0.4576	0.9151	0.5294	0.9870
1⅜	2.2848	11.1169	0.6875	0.4377	0.8754	0.5064	0.9441
1 5/16	2.3936	10.6116	0.6562	0.4178	0.8356	0.4834	0.9012
1¼	2.5133	10.1062	0.6250	0.3979	0.7958	0.4604	0.8583
1 3/16	2.6456	9.6010	0.5937	0.3780	0.7560	0.4374	0.8154
1⅛	2.7925	9.0958	0.5625	0.3581	0.7162	0.4143	0.7724
1 1/16	2.9568	8.5904	0.5312	0.3382	0.6764	0.3913	0.7295
1	3.1416	8.0851	0.5000	0.3183	0.6366	0.3683	0.6866
15/16	3.3510	7.5798	0.4687	0.2984	0.5968	0.3453	0.6437
⅞	3.5904	7.0744	0.4375	0.2785	0.5570	0.3223	0.6007
13/16	3.8666	6.5692	0.4062	0.2586	0.5173	0.2993	0.5579
¾	4.1888	6.0639	0.3750	0.2387	0.4775	0.2762	0.5150
11/16	4.5696	5.5586	0.3437	0.2189	0.4377	0.2532	0.4720
⅔	4.7124	5.3903	0.3333	0.2122	0.4244	0.2455	0.4577
⅝	5.0265	5.0532	0.3125	0.1989	0.3979	0.2301	0.4291
9/16	5.5851	4.5479	0.2812	0.1790	0.3581	0.2071	0.3862
½	6.2832	4.0426	0.2500	0.1592	0.3183	0.1842	0.3433
7/16	7.1808	3.5373	0.2187	0.1393	0.2785	0.1611	0.3003
⅖	7.8540	3.2340	0.2000	0.1273	0.2546	0.1473	0.2746
⅜	8.3776	3.0319	0.1875	0.1194	0.2387	0.1381	0.2575
⅓	9.4248	2.6947	0.1666	0.1061	0.2122	0.1228	0.2289
5/16	10.0531	2.5266	0.1562	0.0995	0.1989	0.1151	0.2146
2/7	10.9956	2.3100	0.1429	0.0909	0.1819	0.1052	0.1962
¼	12.5664	2.0213	0.1250	0.0796	0.1591	0.0921	0.1716
⅔	14.1372	1.7967	0.1111	0.0707	0.1415	0.0818	0.1526
⅕	15.7080	1.6170	0.1000	0.0637	0.1273	0.0737	0.1373
3/16	16.7552	1.5160	0.0937	0.0597	0.1194	0.0690	0.1287
⅙	18.8496	0.5053	0.0833	0.0531	0.1061	0.0614	0.1144

All Circular Pitch Gears Are Made-To-Order

Rules and Formulas For Module (Metric) Spur Gear Calculations

(Module Represents the Amount of Pitch Diameter per Tooth)

To Find	Having	Rule	Formula
Metric Module	Pitch Diameter and Number of Teeth	Divide Pitch Diameter in Millimeters by the Number of Teeth	$M = \frac{PD\ (Millimeters)}{N}$
Metric Module	Circular Pitch in Millimeter	Divide Circular Pitch in Millimeters by Pi (3.1416)	$M = \frac{C\ (Millimeters)}{3.1416}$
Metric Module	Diametral Pitch	Divide 25.4 by Diametral Pitch	$M = \frac{25.4}{DP}$
Metric Module	Outside Diameter and Number of Teeth	Divide Outside Diameter (in Millimeters) by the Number of Teeth plus 2	$M = \frac{OD}{N + 2}$
Pitch Diameter	Module and Number of Teeth	Multiply Module by Number of Teeth	$PD\ (In\ MM) = M \times N$
Pitch Diameter	Number of Teeth and Outside Diameter	Divide the product of Outside Diameter and No. of Teeth by No. of Teeth plus 2	$PD = \frac{OD \times N}{N + 2}$
Pitch Diameter	Outside Diameter and the Module	Multiply Module by 2 and Subtract from Outside Diameter	$PD = OD - 2M$
Outside Diameter	Module and Number of Teeth	Number of Teeth plus 2 Multiplied by Module	$OD\ (In\ MM) = (N + 2) \times M$
Diametral Pitch	Module	Divide 25.4 by Module	$DP = \frac{25.4}{M}$
Circular Pitch	Module	Multiply Module by Pi (3.1416)	$CP\ (In\ MM) = M \times 3.1416$
Addendum	Module Known	The Addendum equals the Module	$A = M$
Whole Depth	Module Known	Multiply 2.157 by Module	$WD\ (In\ MM) = 2.157 \times M$
Thickness of Tooth	Module and Outside Diameter	Multiply Pitch Diameter (in Millimeters) by the Sine of the Angle of 90 Divided by the Number of Teeth	$t\ (In\ MM) = PD\ (MM) \times Sine\ \frac{90}{N}$
English Module	Pitch Diameter in Inches and Number of Teeth	Divide Pitch Diameter in Inches by Number of Teeth	$M = \frac{PD\ (Inches)}{N}$ (Answer in Fraction)

NOTE: Rules and Formulas Relating to Tooth Depth and Outside Diameter Apply to Full-Depth, Equal Addendum Gears.

Module Pitch
Tooth Dimensions

Tooth Dimensions Based Upon Module System

(One millimeter equals 0.03937 inch)

Module, DIN Standard Series	Equivalent Diametral Pitch	Circular Pitch		Addendum, Millimeters	Dedendum, Millimeters†	Whole Depth,† Millimeters	Whole Depth,‡ Millimeters
		Millimeters	Inches				
0.30	84.667	0.943	0.0371	0.30	0.350	0.650	0.647
0.40	63.500	1.257	0.0495	0.40	0.467	0.867	0.863
0.50	50.800	1.571	0.0618	0.50	0.583	1.083	1.079
0.60	42.333	1.885	0.0742	0.60	0.700	1.300	1.294
0.70	36.286	2.199	0.0865	0.70	0.817	1.517	1.510
0.80	31.750	2.513	0.0989	0.80	0.933	1.733	1.726
0.90	28.222	2.827	0.1113	0.90	1.050	1.950	1.941
1.00	25.400	3.142	0.1237	1.00	1.167	2.167	2.157
1.25	20.320	3.927	0.1546	1.25	1.458	2.708	2.697
1.50	16.933	4.712	0.1855	1.50	1.750	3.250	3.236
1.75	14.514	5.498	0.2164	1.75	2.042	3.792	3.774
2.00	12.700	6.283	0.2474	2.00	2.333	4.333	4.314
2.25	11.289	7.069	0.2783	2.25	2.625	4.875	4.853
2.50	10.160	7.854	0.3092	2.50	2.917	5.417	5.392
2.75	9.236	8.639	0.3401	2.75	3.208	5.958	5.932
3.00	8.466	9.425	0.3711	3.00	3.500	6.500	6.471
3.25	7.815	10.210	0.4020	3.25	3.791	7.041	7.010
3.50	7.257	10.996	0.4329	3.50	4.083	7.583	7.550
3.75	6.773	11.781	0.4638	3.75	4.375	8.125	8.089
4.00	6.350	12.566	0.4947	4.00	4.666	8.666	8.628
4.50	5.644	14.137	0.5566	4.50	5.250	9.750	9.707
5.00	5.080	15.708	0.6184	5.00	5.833	10.833	10.785
5.50	4.618	17.279	0.6803	5.50	6.416	11.916	11.864
6.00	4.233	18.850	0.7421	6.00	7.000	13.000	12.942
6.50	3.908	20.420	0.8035	6.50	7.583	14.083	14.021
7.00	3.628	21.991	0.8658	7.00	8.166	15.166	15.099
8.00	3.175	25.132	0.9895	8.00	9.333	17.333	17.256
9.00	2.822	28.274	1.1132	9.00	10.499	19.499	19.413
10.00	2.540	31.416	1.2368	10.00	11.666	21.666	21.571
11.00	2.309	34.558	1.3606	11.00	12.833	23.833	23.728
12.00	2.117	37.699	1.4843	12.00	14.000	26.000	25.884
13.00	1.954	40.841	1.6079	13.00	15.166	28.166	28.041
14.00	1.814	43.982	1.7317	14.00	16.332	30.332	30.198
15.00	1.693	47.124	1.8541	15.00	17.499	32.499	32.355
16.00	1.587	50.266	1.9790	16.00	18.666	34.666	34.512
18.00	1.411	56.549	2.2263	18.00	21.000	39.000	38.826
20.00	1.270	62.832	2.4737	20.00	23.332	43.332	43.142
22.00	1.155	69.115	2.7210	22.00	25.665	47.665	47.454
24.00	1.058	75.398	2.9685	24.00	28.000	52.000	51.768
27.00	0.941	84.823	3.339	27.00	31.498	58.498	58.239
30.00	0.847	94.248	3.711	30.00	35.000	65.000	64.713
33.00	0.770	103.673	4.082	33.00	38.498	71.498	71.181
36.00	0.706	113.097	4.453	36.00	41.998	77.998	77.652
39.00	0.651	122.522	4.824	39.00	45.497	84.497	84.123
42.00	0.605	131.947	5.195	42.00	48.997	90.997	90.594
45.00	0.564	141.372	5.566	45.00	52.497	97.497	97.065
50.00	0.508	157.080	6.184	50.00	58.330	108.330	107.855
55.00	0.462	172.788	6.803	55.00	64.163	119.163	118.635
60.00	0.423	188.496	7.421	60.00	69.996	129.996	129.426
65.00	0.391	204.204	8.040	65.00	75.829	140.829	140.205
70.00	0.363	219.911	8.658	70.00	81.662	151.662	150.997
75.00	0.339	235.619	9.276	75.00	87.495	162.495	161.775

† Dedendum and total depth when clearance = 0.1666 x module, or one-sixth module.
‡ Total Depth equivalent to American standard full-depth teeth. (Clearance = 0.157 x Module.)

Bevel & Miter Gear Formulas

To Find	Rule	Formula
Pitch Diameter	Divide Number of Teeth by Diametral Pitch	Pitch Diameter = $\frac{\text{Number of Teeth}}{\text{Diametral Pitch}}$
Tangent of Pitch Angle Of Driven	Divide Number of Teeth in Driven by Number of Teeth in Driver	Tangent Pitch Angle of Driven = $\frac{\text{Number of Teeth in Driven}}{\text{Number of Teeth in Driver}}$ = Ratio
Pitch Angle of Driver	Subtract Pitch Angle of Driven from 90 Degrees	Pitch Angle Of Driver = 90 Degrees - Pitch Angle of Driven
Pitch Cone Radius	Divide Pitch Diameter by Twice the Sine of the Pitch Angle	Pitch Cone Radius = $\frac{\text{Pitch Diamter}}{2 \times \text{Sine Pitch Angle}}$
Tangent of Addendum Angle	Divide Addendum by the Pitch Cone Radius	Tangent of Addendum Angle = $\frac{\text{Addendum}}{\text{Pitch Cone Radius}}$
Face Angle	Add Addendum Angle to Pitch Angle	Face Angle = Addendum Angle + Pitch Angle
Tangent of Dedendum Angle	Divide Dedendum by the Pitch Cone Radius	Tangent of Dedendum Angle = $\frac{\text{Dedendum}}{\text{Pitch Cone Radius}}$
Root Angle	Subtract Dedendum Angle from Pitch Angle	Root Angle = Pitch Angle - Dedendum Angle
Angular Addendum	Multiply Addendum by Cosine of Pitch Angle	Angular Addendum = Addendum × Cosine Pitch Angle
Outside Diameter	Add 2 Angular Addenda to Pitch Diameter	Outside Diameter = 2 Angular Addenda × Pitch Diamter
Mounting Distance	Add one-half the Pitch Diameter of Mating to Pitch Line	Mounting Distance = $\frac{\text{Pitch Diameter of Mate}}{2}$ + Backing to Pitch Line
Distance From Cone Center to Crown	Multiply one-half Outside Diameter by Co-tangent of Face Angle	Cone Center to Crown = $\frac{\text{Outside Diameter}}{2}$ × Co-Tangent Face Angle
Backing to Crown	Subtract Cone Center to Crown from Mounting Distance	Backing to Crown = Mounting Distance - Cone Center to Crown
Ratio	Divide Teeth in Driven by Teeth in Driver	Ratio = $\frac{\text{Number of Teeth in Driven}}{\text{Number of Teeth in Driver}}$

Formula For Worm Gears

(Based On Diametral Pitch)

To Find	Rule	Formula
Worm Gear Pitch Diameter	Divide Number of Teeth by Diametral Pitch	$\text{Pitch Diameter} = \frac{\text{Number of Teeth in Worm Gear}}{\text{Diametral Pitch}}$
Worm Gear Throat Diameter	Add 2 Addenda to Pitch Diameter	Throat Diameter = (2 × Addendum) + Pitch Diameter
Worm Gear Outside Diameter	Add 3 Addenda to Pitch Diameter	Outside Diameter = (3 × Addendum) + Pitch Diameter
Worm Pitch Diameter	Subtract the Worm Gear Pitch Diameter from Twice the Center Distance	Worm Pitch Diameter = (2 × Center Distance) - Worm Gear Pitch Diameter
Worm Outside Diameter	Add 2 Addenda to Worm Pitch Diameter	Worm Outside Diameter = Worm Pitch Diameter + 2 × Addendum
Worm Lead	Divide 3.1416 by Diametral Pitch and Multiply by Number of Threads in Worm	$\text{Worm Lead} = \frac{3.1416}{\text{Diametral Pitch}} \times \text{Number of Threads in Worm}$
Co-Tangent of Worm Helix Angle	Multiply Worm Pitch Diameter by Diametral Pitch and Divide by Number of Worm Threads	$\text{Co-Tangent Worm Helix Angle} = \frac{\text{Worm Pitch Diameter} \times \text{Diametral Pitch}}{\text{Number Worm Threads}}$
Center Distance	Add Worm Pitch Diameter to Worm Gear Pitch Diameter and Divide Sum by 2	$\text{Center Distance} = \frac{\text{Worm Pitch Diameter} + \text{Worm Gear Pitch Diameter}}{2}$
Ratio	Divide Number of Teeth in Worm Gear by Number of Worm Threads	$\text{Ratio} = \frac{\text{Number of Teeth in Worm Gear}}{\text{Number of Worm Threads}}$

NOTE: Tooth data (Addendum, Full Depth, Etc.) is same as for Spur Gears.

Comparative Sizes of Involute Gear Teeth

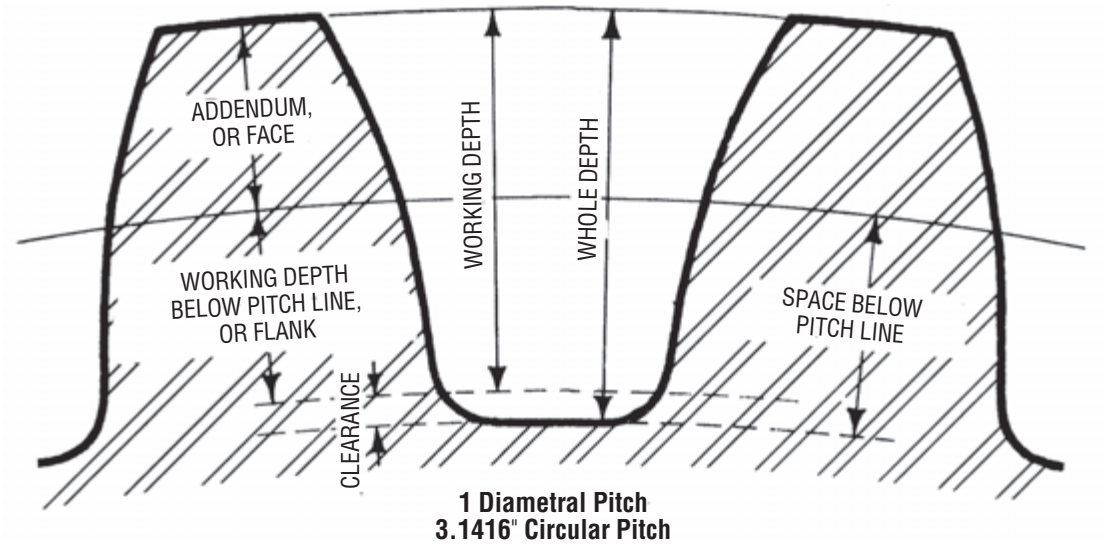

1 Diametral Pitch
3.1416" Circular Pitch

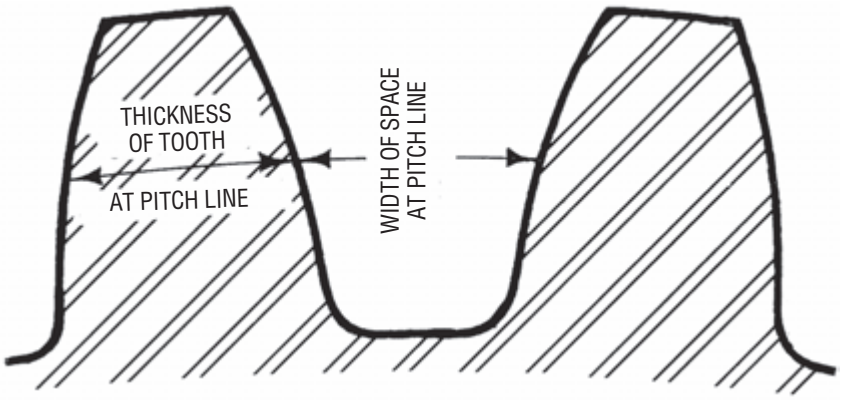

1¼ Diametral Pitch
2.5133" Circular Pitch

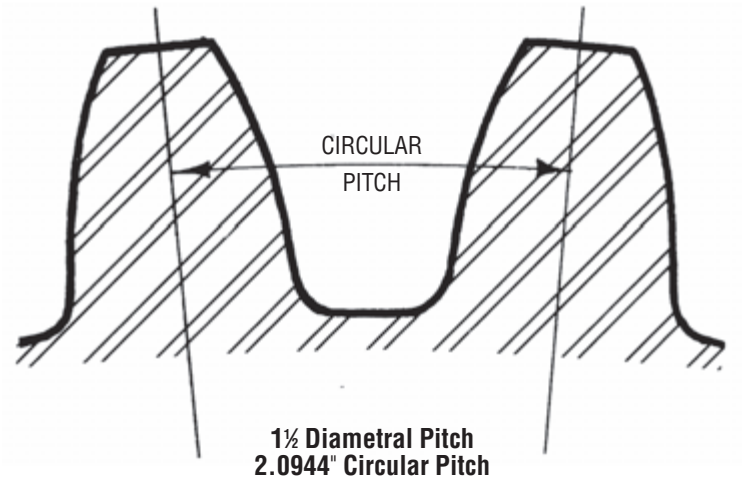

1½ Diametral Pitch
2.0944" Circular Pitch

Formula For Worm Gears

Comparative Sizes of Involute Gear Teeth

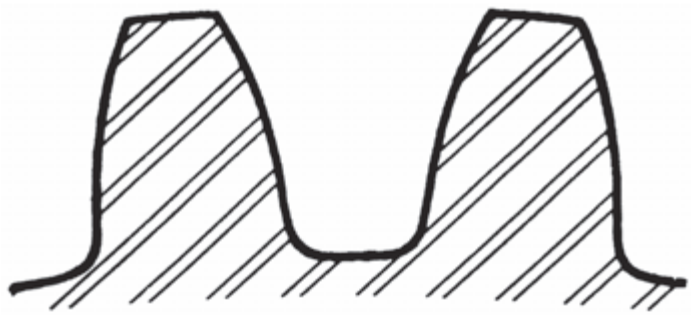

1¾ Diametral Pitch
1.7952" Circular Pitch

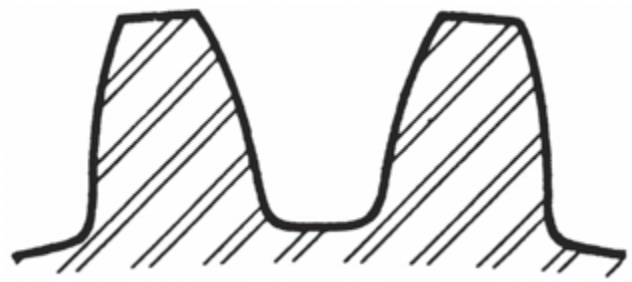

2 Diametral Pitch
1.5708" Circular Pitch

2½ Diametral Pitch
1.2566" Circular Pitch

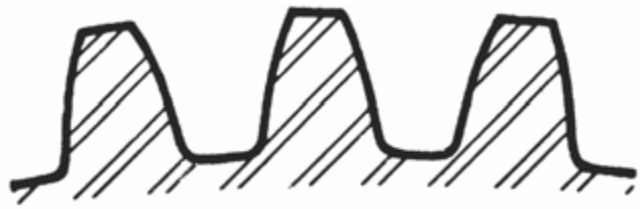

3 Diametral Pitch
1.0472" Circular Pitch

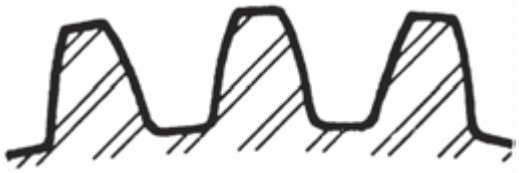

3½ Diametral Pitch
.8976" Circular Pitch

4 Diametral Pitch
.7854" Circular Pitch

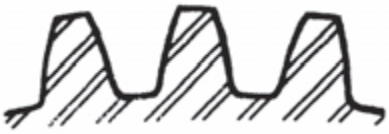

5 Diametral Pitch
.6283" Circular Pitch

6 Diametral Pitch
.5236" Circular Pitch

Comparative Sizes of Involute Gear Teeth

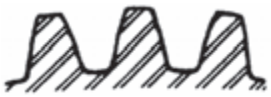

7 Diametral Pitch
.4488" Circular Pitch

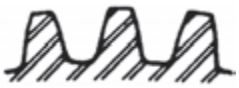

8 Diametral Pitch
.3927" Circular Pitch

10 Diametral Pitch
.3142" Circular Pitch

12 Diametral Pitch
.2618" Circular Pitch

14 Diametral Pitch
.2244" Circular Pitch

16 Diametral Pitch
.1963" Circular Pitch

18 Diametral Pitch
.1745" Circular Pitch

20 Diametral Pitch
.1571" Circular Pitch

Gear Rack Comparison — 14½ and 20°

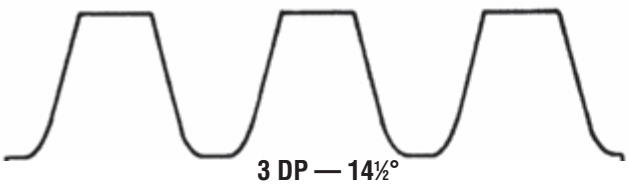

3 DP — 14½°

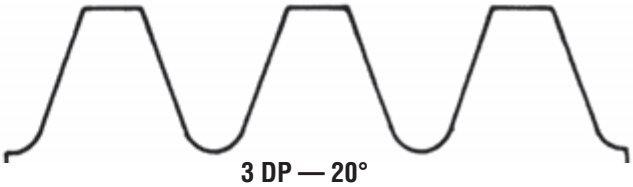

3 DP — 20°

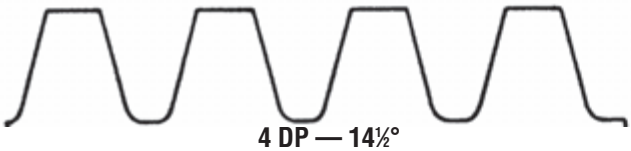

4 DP — 14½°

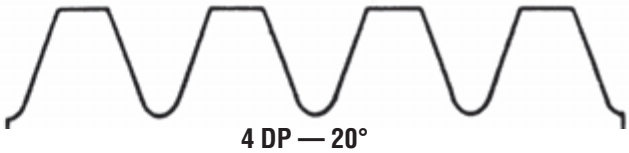

4 DP — 20°

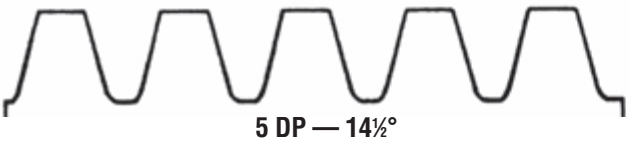

5 DP — 14½°

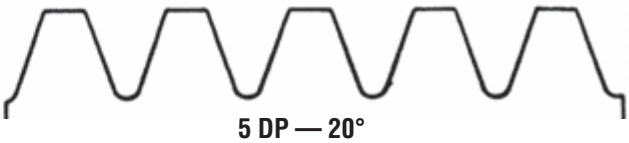

5 DP — 20°

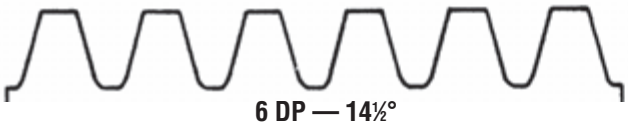

6 DP — 14½°

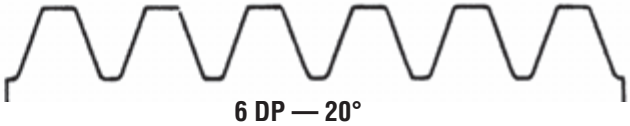

6 DP — 20°

Formula For Worm Gears

Stock Steel Gears

Martin steel gears are manufactured from high quality carbon steel material. This material is used for strength and good hardening characteristics. These gears may be hardened by any method acceptable to good practice such as flame or induction hardening. Flame hardening is preferred so that only the teeth are hardened. Distortion is virtually eliminated and the bore is left soft for subsequent work.

Cast Gears

Martin cast iron gears are manufactured from high quality close grained controlled specification irons.

Reboring of Stock Gears

Most of Martin's Stock Gears may be rebored. The maximum recommended bore size is given for each gear. In reboring gears, care must be taken to hold the bore concentric with the pitch diameter. In most cases this would require a great amount of time. To cut costly set-up time when reboring, Martin holds the outside diameter of its gears concentric with the bore which in turn is concentric with the pitch diameter. The outside diameter is held to a closer total indicator reading than the pitch diameter. In the finer pitches, care should be taken not to distort the outside diameter when chucking.

Martin's steel gears are machined all over.

Rebore or rework may be accomplished by chucking on the hub. Concentricity must be controlled in order for gears to run at maximum efficiency.