GENERAL ENGINEERING INFORMATION

ITEM	PAGE
HORSEPOWER/TORQUE	*i-2 – i-6*
ELECTRICAL	*i-7*
ELECTRICAL MOTORS	*i-8*
SHAFT SELECTION	*i-9 – i-11*
FLYWHEEL	*i-12*
WEIGHTS OF STEEL	*i-13*
PROPERTIES OF STEEL	*i-14*
PROPERTIES OF VARIOUS METALS	*i-15*
HARDNESS CONVERSION CHART	*i-16*
DECIMAL EQUIVALENT CHART	*i-17*
ENGLISH/METRIC CONVERSIONS	*i-18 – i-19*
ENGINEERING FORMULAS & CONSTANTS	*i-20*
CIRCUMFERENCES/AREAS OF CIRCLES	*i-21*
TRIGONOMETRIC FORMULAS/FUNCTIONS	*i-22 – i-24*
CONVERSION TABLES	*i-25 – i-28*

Horsepower/Torque

Horsepower/Torque

Horsepower

One HP is the rate of work required to raise 33,000 pounds one foot in one minute.

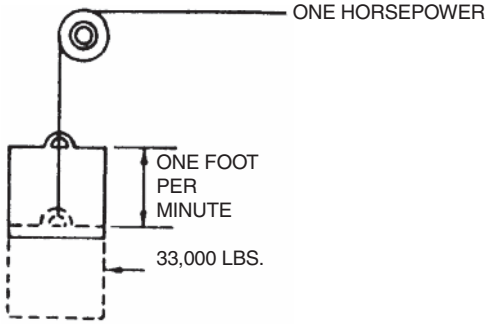

$$HP = \frac{\text{Force} \times \text{FPM}}{33{,}000}$$

$$HP = \frac{\text{Torque (in Pound-Inches)} \times \text{RPM}}{63{,}025}$$

$$HP = \frac{\text{Torque (in Pound-Feet)} \times \text{RPM}}{5{,}252}$$

Torque: The twisting or turning effort around a shaft tending to cause rotation. Torque is determined by multiplying the applied force times the distance from the point where force is applied to the shaft center.

TQ = F (force) × R (radius)

$$\text{Torque (in Pound-Inches)} = \frac{63{,}025 \times \text{HP}}{\text{RPM}}$$

= Force × Lever Arm (in Inches)

$$\text{Torque (in Pound-Feet)} = \frac{5{,}252 \times \text{HP}}{\text{RPM}}$$

= Force × Lever Arm (in Feet)

Force = Working Loads in Pounds
FPM = Feet per Minute
RPM = Revolutions per Minute
Lever Arm = Distance from the Force to the center of rotation on Inches or Feet

Torque Calculation Example

20 HP at 100 RPM = 12,605 Pound-Inches Torque

2.0 HP at 10 RPM = 12,605 Pound-Inches Torque

Overhung Loads

An overhung load is a bending force imposed on a shaft due to the torque transmitted by V-drives, chain drives, and other power transmission devices, other than flexible couplings.

Most motor and reducer manufacturers list the maximum values allowable for overhung loads. It is desirable that these figures be compared with the load actually imposed by the connected drive.

Overhung loads may be calculated as follows:

$$\text{O.H.L.} = \frac{63{,}000 \times \text{HP} \times \text{F}}{\text{N} \times \text{R}}$$

Where: HP = Transmitted HP × Service Factor
N = RPM of shaft
R = Radius of sprocket, pulley, etc.
F = Factor

Weights of the drive components are usually negligible. The formula is based on the assumption that the load is applied at a point equal to one shaft diameter from the bearing face. Factor F depends on the type of drive used:

F =
1.00 for single chain drives
1.10 for TIMING belt drives
1.25 for spur or helical gear or double chain drives
1.50 for V-belt drives
2.50 for flat belt drives

Example: Find the overhung load imposed on a reducer by a double chain drive transmitting 7 HP @ 30 RPM. The pitch diameter of the sprocket is 10"; service factor is 1.3.

Solution:

$$\text{O.H.L} = \frac{(63{,}000)(7 \times 1.3)}{(30)}\frac{(1.25)}{(5)} = 4{,}780 \text{ lbs.}$$

Torque (in Pound-Inches) For Horsepower/RPM

Torque for 1-50 HP @ 50-220 RPM

HP	Revolutions per Minute																	
	50	60	70	80	90	100	110	120	130	140	150	160	170	180	190	200	210	220
1	1261	1050	900	788	700	630	573	525	485	450	420	394	371	350	332	315	300	286
2	2521	2101	1801	1576	1401	1260	1145	1050	969	900	840	787	741	700	663	630	600	572
3	3782	3151	2701	2363	2101	1890	1718	1575	1454	1350	1260	1181	1112	1050	995	945	900	859
4	5042	4202	3601	3151	2801	2521	2291	2100	1939	1800	1680	1575	1482	1400	1326	1260	1200	1145
5	6303	5252	4502	3939	3501	3151	2864	2626	2424	2250	2100	1969	1853	1750	1658	1575	1500	1432
6	7563	6303	5402	4727	4202	3781	3437	3151	2908	2701	2521	2363	2224	2100	1990	1890	1800	1718
7	8824	7353	6302	5515	4902	4411	4010	3676	3393	3151	2941	2757	2595	2450	2321	2205	2100	2005
8	10084	8403	7203	6303	5602	5042	4583	4201	3878	3601	3361	3151	2965	2801	2653	2521	2400	2291
9	11345	9454	8103	7090	6303	5672	5156	4726	4363	4051	3781	3545	3336	3151	2985	2836	2701	2578
10	12605	10504	9004	7878	7003	6302	5729	5252	4848	4501	4201	3939	3707	3501	3317	3151	3001	2864
11	13866	11555	9904	8666	7703	6932	6302	5777	5332	4951	4621	4332	4078	3851	3648	3466	3301	3151
12	15126	12605	10804	9454	8403	7563	6875	6302	5817	5402	5042	4726	4448	4201	3980	3781	3601	3437
13	16387	13655	11705	10242	9104	8193	7448	6827	6302	5852	5462	5120	4819	4551	4312	4096	3901	3724
14	17647	14706	12605	11029	9804	8823	8021	7352	6787	6302	5882	5514	5190	4901	4643	4411	4201	4010
15	18908	15756	13505	11817	10504	9453	8594	7878	7272	6752	6302	5908	5561	5252	4975	4726	4501	4297
16	20168	16807	14406	12605	11204	10084	9167	8403	7756	7202	6722	6302	5931	5602	5307	5042	4801	4583
17	21429	17857	15306	13393	11905	10714	9740	8928	8241	7653	7142	6696	6302	5952	5639	5357	5102	4870
18	22689	18908	16206	14181	12605	11344	10313	9453	8726	8103	7563	7090	6673	6302	5970	5672	5402	5156
19	23950	19958	17107	14968	13305	11974	10886	9979	9211	8553	7983	7484	7044	6652	6302	5987	5702	5443
20	25210	21008	18007	15756	14006	12605	11459	10504	9696	9003	8403	7878	7414	7002	6634	6302	6002	5729
21	26471	22059	18907	16544	14706	13235	12032	11029	10181	9453	8823	8272	7785	7352	6965	6617	6302	6016
22	27731	23109	19808	17332	15406	13865	12605	11554	10665	9903	9243	8665	8156	7703	7297	6932	6602	6302
23	28992	24160	20708	18120	16106	14495	13178	12079	11150	10354	9663	9059	8526	8053	7629	7247	6902	6588
24	30252	25210	21609	18908	16807	15126	13750	12605	11635	10804	10084	9453	8897	8403	7961	7563	7202	6875
25	31513	26260	22509	19695	17507	15756	14323	13130	12120	11254	10504	9847	9268	8753	8292	7878	7503	7161
26	32773	27311	23409	20483	18207	16386	14896	13655	12605	11704	10924	10241	9639	9103	8624	8193	7803	7448
27	34034	28361	24310	21271	18908	17016	15469	14180	13089	12154	11344	10635	10009	9453	8956	8508	8103	7734
28	35294	29412	25210	22059	19608	17647	16042	14705	13574	12605	11764	11029	10380	9803	9287	8823	8403	8021
29	36555	30462	26110	22847	20308	18277	16615	15231	14059	13055	12184	11423	10751	10154	9619	9138	8703	8307
30	37815	31513	27011	23634	21008	18907	17188	15756	14544	13505	12605	11817	11122	10504	9951	9453	9003	8594
31	39076	32563	27911	24422	21709	19537	17761	16281	15029	13955	13025	12211	11492	10854	10283	9768	9303	8880
32	40336	33613	28811	25210	22409	20168	18334	16806	15513	14405	13445	12605	11863	11204	10614	10084	9603	9167
33	41597	34664	29712	25998	23109	20798	18907	17331	15998	14855	13865	12998	12234	11554	10946	10399	9903	9453
34	42857	35714	30612	26786	23809	21428	19480	17857	16483	15306	14285	13392	12605	11904	11278	10714	10204	9740
35	44118	36767	31512	27573	24510	22058	20053	18382	16968	15756	14705	13786	12975	12254	11609	11029	10504	10026
36	45378	37815	32413	28361	25210	22689	20626	18907	17453	16206	15126	14180	13346	12605	11941	11344	10804	10313
37	46639	38865	33313	29149	25910	23319	21199	19432	17937	16656	15546	14574	13717	12955	12273	11659	11104	10599
38	47889	39916	34214	29937	26611	23949	21772	19958	18422	17106	15966	14968	14088	13305	12605	11974	11404	10886
39	49160	40996	35114	30725	27311	24579	22345	20483	18907	17557	16386	15362	14458	13655	12936	12289	11704	11172
40	50420	42017	36014	31513	28011	25210	22918	21008	19392	18007	16806	15756	14829	14005	13268	12605	12004	11459
41	51681	43067	36915	32300	28711	25840	23491	21533	19877	18457	17226	16150	15200	14355	13600	12920	12304	11745
42	52941	44118	37815	33088	29412	26470	24064	22058	20362	18907	17647	16544	15570	14705	13931	13235	12605	12032
43	54202	45168	38715	33876	30112	27100	24637	22584	20846	19357	18067	16938	15941	15056	14263	13550	12905	12318
44	55462	46218	39616	34664	30812	27731	25210	23109	21331	19807	18487	17331	16312	15406	14595	13865	13205	12605
45	56723	47269	40516	35452	31513	28361	25783	23634	21816	20258	18907	17725	16683	15756	14927	14180	13505	12891
46	57383	48319	41416	36239	32213	28991	26356	24159	22301	20708	19327	18119	17053	16106	15258	14495	13805	13177
47	59244	49370	42317	37027	32913	29621	26928	24684	22786	21158	19747	18513	17424	16456	15590	14810	14105	13464
48	60504	50420	43217	37815	33613	30252	27501	25210	23270	21608	20168	18907	17795	16806	14922	15126	14405	13750
49	61764	51470	44117	38603	34314	30882	28074	25735	23755	22058	20588	19301	18166	17156	16253	15441	14705	14037
50	63025	52521	45018	39319	35014	31512	28647	26260	24240	22509	21008	19695	18536	17507	16585	15756	15006	14323

Torque (in Pound-Inches) For Horsepower/RPM

Torque for 1-50 HP @ 230-1000 RPM

	Revolutions per Minute																		
HP	230	240	250	260	270	280	290	300	350	400	450	500	550	600	650	700	800	900	1000
1	274	263	252	242	233	225	217	210	180	157	140	126	114	105	96	90	78	70	63
2	548	525	504	484	466	450	434	420	360	315	280	252	229	210	193	180	157	140	126
3	822	787	756	727	700	675	651	630	540	472	420	378	343	315	290	270	236	210	189
4	1096	1050	1008	969	933	900	869	840	720	630	560	504	458	420	387	360	315	280	252
5	1370	1313	1260	1212	1167	1125	1087	1050	900	787	700	630	572	525	484	450	393	350	315
6	1644	1575	1512	1454	1401	1350	1303	1260	1080	945	840	756	687	630	581	540	472	420	378
7	1918	1838	1764	1696	1633	1575	1521	1470	1260	1102	980	882	802	735	678	630	551	490	441
8	2192	2100	2016	1939	1867	1800	1738	1680	1440	1260	1120	1008	916	840	775	720	630	560	504
9	2466	2363	2268	2181	2100	2025	1955	1890	1620	1418	1260	1134	1031	945	872	810	709	630	567
10	2740	2626	2521	2424	2334	2250	2173	2100	1800	1575	1400	1260	1145	1050	969	900	787	700	630
11	3014	2888	2773	2666	2567	2475	2390	2310	1980	1733	1540	1386	1260	1155	1066	990	866	770	693
12	3288	3151	3025	2908	2801	2701	2607	2521	2160	1890	1680	1512	1375	1260	1163	1080	945	840	756
13	3562	3413	3277	3151	3034	2926	2825	2731	2340	2048	1820	1638	1489	1365	1260	1170	1024	910	819
14	3836	3676	3529	3393	3267	3151	3042	2941	2521	2205	1960	1764	1604	1470	1357	1260	1102	980	882
15	4110	3939	3781	3636	3501	3376	3259	3151	2701	2363	2100	1890	1718	1575	1454	1350	1181	1050	945
16	4384	4201	4033	3878	3734	3601	3477	3361	2881	2521	2240	2016	1833	1680	1551	1440	1260	1120	1008
17	4658	4464	4285	4120	3968	3826	3694	3571	3061	2678	2380	2142	1948	1785	1648	1530	1339	1190	1071
18	4932	4726	4537	4363	4201	4051	3911	3781	3241	2836	2521	2268	2062	1890	1745	1620	1418	1260	1134
19	5206	4989	4789	4605	4435	4276	4129	3991	3421	2993	2661	2394	2177	1995	1842	1710	1496	1330	1197
20	5480	5252	5042	4848	4668	4501	4346	4201	3601	3151	2801	2521	2291	2100	1939	1800	1575	1400	1260
21	5754	5514	5294	5090	4901	4726	4563	4411	3781	3308	2941	2647	2406	2205	2036	1890	1654	1470	1323
22	6028	5777	5546	5332	5135	4951	4781	4621	3961	3466	3081	2773	2521	2310	2133	1980	1733	1540	1386
23	6302	6039	5798	5575	5368	5177	4998	4831	4141	3623	3221	2899	2635	2415	2230	2070	1811	1610	1449
24	6576	6302	6050	5817	5602	5402	5215	5042	4321	3781	3361	3025	2750	2521	2327	2160	1890	1680	1512
25	6850	6565	6302	6060	5835	5627	5433	5252	4501	3939	3501	3151	2864	2626	2424	2250	1969	1750	1575
26	7124	6827	6554	6302	6069	5852	5650	5462	4681	4096	3641	3277	2979	2731	2521	2340	2048	1820	1638
27	7398	7090	6806	6544	6302	6077	5867	5672	4861	4254	3781	3403	3093	2836	2617	2430	2127	1890	1701
28	7672	7352	7058	6787	6535	6302	6085	5882	5042	4411	3921	3529	3208	2941	2714	2521	2205	1960	1764
29	7946	7615	7310	7029	6769	6527	6302	6092	5222	4569	4061	3655	3323	3046	2811	2611	2284	2030	1827
30	8220	7878	7563	7272	7002	6752	6519	6302	5402	4726	4201	3781	3437	3151	2908	2701	2363	2100	1890
31	8494	8140	7815	7514	7236	6977	6737	6512	5582	4884	4341	3907	3552	3256	3005	2791	2442	2170	1953
32	8768	8403	8067	7756	7469	7202	6954	6722	5762	5042	4481	4033	3666	3361	3102	2881	2520	2240	2016
33	9042	8665	8319	7999	7703	7427	7171	6932	5942	5199	4621	4159	3781	3466	3199	2971	2599	2310	2079
34	9316	8928	8571	8241	7936	7653	7389	7142	6122	5357	4761	4285	3896	3571	3296	3061	2678	2380	2142
35	9590	9191	8823	8484	8169	7878	7606	7352	6302	5514	4901	4411	4010	3676	3393	3151	2757	2450	2205
36	9864	9453	9075	8726	8403	8103	7823	7563	6482	5672	5042	4537	4125	3781	3490	3241	2836	2521	2268
37	10138	9716	9327	8968	8636	8328	8041	7773	6662	5829	5182	4663	4239	3886	3587	3331	2913	2591	2331
38	10412	9978	9579	9211	8870	8553	8258	7983	6842	5987	5322	4789	4354	3991	3684	3421	2993	2661	2394
39	10686	10241	9831	9453	9103	8778	8475	8193	7022	6144	5462	4915	4469	4096	3781	3511	3072	2731	2457
40	10960	10504	10084	9696	9337	9003	8693	8403	7202	6302	5602	5042	4583	4201	3878	3601	3151	2801	2521
41	11234	10766	10336	9938	9570	9228	8910	8613	7382	6460	5742	5168	4698	4306	3975	3691	3230	2871	2584
42	11508	11029	10588	10181	9803	9453	9127	8823	7563	6617	5882	5294	4812	4411	4072	3781	3308	2941	2647
43	11782	11292	10840	10423	10037	9678	9345	9033	7743	6775	6022	5420	4927	4516	4169	3871	3387	3011	2710
44	12057	11554	11092	10665	10270	9903	9562	9243	7923	6932	6162	5546	5042	4621	4266	3961	3466	3081	2773
45	12331	11817	11344	10908	10504	10129	9779	9453	8103	7090	6302	5672	5156	4726	4363	4051	3545	3151	2836
46	12605	12079	11596	11150	10737	10354	9997	9963	8283	7247	6442	5798	5271	4831	4460	4141	3623	3221	2899
47	12879	12342	11848	11393	10971	10579	10214	9873	8463	7405	6582	5924	5385	4936	4557	4231	3702	3291	2962
48	13153	12605	12100	11635	11204	10804	10431	10084	8643	7563	6722	6050	5500	5042	4654	4321	3781	3361	3025
49	13427	12867	12352	11877	11437	11029	10649	10294	8823	7720	6862	6176	5614	5147	4751	4411	3860	3431	3088
50	13701	13130	12605	12120	11671	11254	10866	10504	9003	7878	7002	6302	5729	5252	4848	4501	3939	3501	3151

Torque (in Pound-Inches) For Horsepower/RPM

Torque for 51-100 HP @ 50-220 RPM

	Revolutions per Minute																	
HP	50	60	70	80	90	100	110	120	130	140	150	160	170	180	190	200	210	220
51	64286	53571	45918	40178	35714	32142	29220	26785	24725	22959	21428	20089	18907	17857	16917	16071	15306	14610
52	65546	54622	46819	40966	36414	32773	29793	27310	25210	23409	21848	20483	19278	18207	17249	16386	15606	14896
53	66807	55672	47719	41754	37115	33403	30366	27836	25694	23859	22268	20877	19649	18557	17580	16701	15906	15183
54	68067	56723	48619	42542	37815	34033	30939	28361	26179	24309	22689	21271	20019	18907	17912	17016	16206	15469
55	69328	57773	49520	43330	38515	34663	31512	28886	26664	24760	23109	21664	20390	19257	18244	17331	16506	15756
56	70588	58823	50420	44118	39216	35294	32085	29411	27149	25210	23529	22058	20761	19607	18575	17647	16806	16042
57	71849	59874	51320	44905	39916	35924	32658	29937	27634	25660	23950	22452	21132	19957	18907	17962	17106	16329
58	73109	60924	52221	45693	40616	36554	33231	30462	28118	26110	24370	22846	21502	20308	19239	18277	17406	16615
59	74370	61975	53121	46481	41316	37184	33804	30987	28603	26560	24790	23240	21873	20658	19571	18592	17707	16902
60	75630	63025	54021	47269	42017	37815	34377	31512	29088	27010	25210	23634	22244	21008	19902	18907	18007	17188
61	76891	64075	54922	48057	42717	38445	34950	32037	29573	27461	25630	24028	22614	21358	20234	19222	18307	17475
62	78151	65126	55822	48844	43417	39075	35523	32563	30058	27911	26050	24422	22985	21708	20566	19537	18607	17761
63	79412	66176	56722	49632	44118	39705	36096	33088	30543	28361	26470	24816	23356	22058	20897	19852	18907	18048
64	80672	67227	57623	50420	44818	40336	36669	33613	31027	28811	26890	25210	23727	22408	21229	20168	19207	18334
65	81933	68277	58523	51208	45518	40966	37242	34138	31512	29261	27310	25604	24097	22759	21561	20483	19507	18621
66	83193	69328	59423	51996	46218	41596	37815	34663	31997	29711	27731	25997	24468	23109	21892	20798	19807	18907
67	84454	70378	60324	52783	46919	42226	38388	35189	32482	30162	28151	26391	24839	23459	22224	21113	20108	19194
68	85714	71428	61224	53571	47619	42857	38961	35714	32967	30612	28571	26785	25210	23809	22556	21428	20408	19480
69	86975	72479	72125	54359	48319	43487	39534	36239	33451	31062	28991	27179	25580	24159	22888	21743	20708	19766
70	88235	73529	63025	55147	49019	44117	40106	36764	33936	31512	29411	27573	25951	24509	23219	22058	21008	20053
71	89496	74580	63925	55935	49720	44747	40679	37289	34421	31962	29831	27967	26322	24859	23551	22373	21308	20339
72	90756	75630	64826	56723	50420	45378	41252	37815	34906	32413	30252	28361	26693	25210	23883	22689	21608	20626
73	92017	76680	65726	57510	51120	46008	41825	38340	35391	32863	30672	28755	27063	25560	24214	23004	21908	20912
74	93277	77731	66626	58298	51821	46638	42398	38865	35875	33313	31092	29149	27434	25910	24546	23319	22208	21199
75	94538	78781	67527	59086	52521	47268	42971	39390	36360	33763	31512	29543	27805	26260	24878	23634	22509	21485
76	95798	79832	68427	59874	53221	47899	43544	39916	36845	34213	31932	29937	28176	26610	25210	23949	22809	21772
77	97059	80882	69327	60662	53921	48529	44117	40441	37330	34663	32353	30330	28546	26960	25541	24264	23109	22058
78	98319	81933	70228	61449	54622	49159	44690	40966	37815	35114	32773	30724	28917	27310	25873	24579	23409	22345
79	99580	82983	71128	62237	55322	49789	45263	41491	38299	35564	33193	31118	29288	27661	26205	24894	23709	22631
80	100804	84033	72029	63024	56022	50420	45836	42016	38784	36014	33613	31512	29658	28011	26536	25210	24009	22918
81	102101	85084	72929	63813	56722	51050	46409	42542	39269	36464	34033	31906	30029	28361	26868	25525	24309	23204
82	103361	86134	73829	64601	57423	51680	46982	43067	39754	36914	34453	32300	30400	28711	27200	25840	24609	23491
83	104622	87185	74730	65388	58123	52310	47555	43592	40239	37365	34874	32694	30771	29061	27532	26155	24909	23777
84	105882	88235	75630	66176	58823	52941	48128	44117	40724	37815	35294	33088	31141	29411	27863	26470	25210	24064
85	107143	89285	76530	66964	59524	53571	48701	44642	41208	38265	35714	33482	31512	29761	28195	26785	25510	24350
86	108403	90336	77430	67752	60224	54201	49274	45168	41693	38715	36134	33876	31883	30112	28527	27100	25810	24637
87	109664	91386	78331	68540	60924	54831	49847	45693	42178	39165	36554	34269	32254	30462	28858	27415	26110	24923
88	110924	92437	79231	69328	61624	55462	50420	46218	42663	39615	36974	34663	32624	30812	29190	27731	26410	25210
89	112185	93487	80132	70115	62325	56092	50993	46743	43148	40066	37395	35057	32995	31163	29522	28046	26710	25496
90	113445	94538	81032	70903	63025	56722	51566	47268	43632	40516	37815	35451	33366	31512	29854	28361	27010	25783
91	114706	95588	81932	71691	63725	57352	52139	47794	44117	40966	38235	35845	33737	31862	30185	28676	27310	26069
92	115967	96638	82833	72479	64426	57983	52712	48319	44602	41416	38655	36239	34107	32212	30517	28991	27611	26355
93	117227	97689	83733	73267	65126	58613	53285	48844	45087	41866	39075	36633	34478	32563	30849	29306	27911	26642
94	118487	98739	84634	74054	65826	59243	53857	49369	45572	42317	39495	37027	34849	32913	31180	29621	28211	26928
95	119748	99790	85534	74842	66526	59873	54430	49895	46056	42767	39916	37421	35220	33263	31512	29936	28511	27215
96	121008	100840	86434	75630	67227	60504	55003	50420	46541	43217	40336	37815	35590	33613	31844	30252	28811	27501
97	122269	101890	87335	76418	67927	61134	55576	50945	47026	43667	40756	38209	35961	33963	32176	30567	29111	27788
98	123529	102941	88235	77206	68627	61764	56149	51470	47511	44117	41176	38602	36332	34313	32507	30882	29411	28074
99	124780	103991	89135	77993	69328	62394	56722	51995	47996	44567	41596	38996	36702	34663	32839	31197	29711	28361
100	126050	105042	90036	78781	70028	63025	57295	52521	48481	45018	42016	39390	37073	35014	33171	31512	30012	28647

Torque (in Pound-Inches) For Horsepower/RPM

Torque for 51-100 HP @ 230-1000 RPM

	Revolutions per Minute																		
HP	230	240	250	260	270	280	290	300	350	400	450	500	550	600	650	700	800	900	1000
51	13975	13392	12857	12362	11904	11479	11083	10714	9183	8035	7141	6428	5844	5357	4945	4591	4017	3571	3314
52	14249	13655	13109	12605	12138	11704	11301	10924	9363	8193	7282	6554	5958	5462	5042	4681	4096	3641	3277
53	14523	13918	13361	12847	12371	11929	11518	11134	9543	8350	7422	6680	6073	5567	5138	4771	4175	3711	3340
54	14797	14180	13613	13089	12605	12154	11735	11344	9723	8508	7563	6806	6187	5672	5235	4861	4254	3781	3403
55	15071	14443	13865	13332	12838	12379	11953	11554	9903	8665	7703	6932	6302	5777	5332	4951	4332	3851	3466
56	15345	14705	14117	13574	13071	12605	12170	11764	10084	8823	7843	7058	6417	5882	5429	5042	4411	3921	3529
57	15619	14968	14369	13817	13305	12830	12387	11974	10264	8981	7983	7184	6531	5987	5526	5132	4490	3991	3592
58	15893	15231	14621	14059	13538	13055	12605	12184	10444	9138	8123	7310	6646	6092	5623	5222	4569	4061	3655
59	16167	15493	14873	14301	13772	13280	12822	12394	10624	9296	9263	7436	6760	6197	5720	5312	4648	4131	3718
60	16441	15756	15126	14544	14055	13505	13039	12605	10804	9453	8403	7563	6875	6302	5817	5402	4726	4201	3781
61	16715	16018	15378	14786	14239	13730	13257	12815	10984	9611	8543	7689	6990	6407	5914	5492	4805	4271	3844
62	16989	16281	15630	15029	14472	13955	13474	13025	11164	9768	8683	7815	7104	6512	6011	5582	4884	4341	3907
63	17263	16544	15882	15271	14705	14180	13691	13235	11344	9926	8823	7941	7219	6617	6108	5672	4963	4411	3970
64	17537	16806	16134	15513	14939	14405	13908	13445	11524	10084	8963	8067	7333	6722	6205	5762	5041	4481	4033
65	17811	17069	16386	15756	15172	14630	14126	13655	11704	10241	9103	8193	7448	6827	6302	5852	5120	4551	4096
66	18085	17331	16638	15998	15406	14855	14343	13865	11884	10399	9243	8319	7563	6932	6399	5942	5199	4621	4159
67	18359	17594	16890	16241	15639	15081	14560	14075	12064	10556	9383	8445	7677	7037	6496	6032	5278	4691	4222
68	18633	17857	17142	16483	15873	15306	14778	14285	12244	10714	9523	8571	7792	7142	6593	6122	5357	4761	4285
69	18907	18119	17394	16725	16106	15531	14995	14495	12424	10871	9663	8697	7906	7247	6690	6212	5435	4831	4348
70	19181	18382	17647	16968	16339	15756	15212	14705	12605	11029	9803	8823	8021	7352	6787	6302	5514	4901	4411
71	19455	18644	17899	17210	16573	15981	15430	14915	12785	11186	9943	8949	8135	7457	6884	6392	5593	4971	4474
72	19729	18907	18151	17453	16806	16206	15647	15126	12965	11344	10084	9075	8250	7563	6981	6482	5672	5042	4537
73	20003	19170	18403	17695	17040	16431	15864	15336	13145	11502	10224	9201	8365	7668	7078	6572	5751	5112	4600
74	20277	19432	18655	17937	17273	16656	16082	15546	13325	11659	10364	9327	8479	7773	7175	6662	5829	5182	4663
75	20551	19695	18907	18180	17507	16881	16299	15756	13505	11817	10504	9453	8594	7878	7272	6752	5908	5252	4726
76	20825	19957	19159	18422	17740	17106	16516	15966	13685	11974	10644	9579	8708	7983	7369	6842	5987	5322	4789
77	21099	20220	19411	18665	17973	17331	16734	16176	13865	12132	10784	9705	8823	8088	7466	6932	6066	5392	4852
78	21373	20483	19663	18907	18207	17557	16951	16386	14045	12289	10924	9831	8938	8193	7563	7022	6144	5462	4915
79	21647	20745	19915	19149	18440	17782	17168	16596	14225	12447	11064	9957	9052	8298	7659	7112	6223	5532	4978
80	21921	21008	20168	19392	18674	18007	17386	16806	14405	12605	11204	10084	9167	8403	7756	7202	6302	5602	5042
81	22195	21271	20420	19634	18907	18232	17603	17016	14585	12762	11344	10210	9281	8508	7853	7292	6381	5672	5105
82	22469	21533	20672	19877	19141	18457	17820	17226	14765	12920	11484	10336	9396	8613	7950	7382	6460	5742	5168
83	22743	21796	20924	20119	19374	18682	18038	17436	14945	13077	11624	10462	9511	8718	8047	7472	6538	5812	5231
84	23017	22058	21176	20362	19607	18907	18255	17647	15126	13235	11764	10588	9625	8823	8144	7563	6617	5882	5294
85	23291	22321	21428	20604	19841	19132	18472	17857	15306	13392	11904	10714	9740	8928	8241	7653	6696	5952	5357
86	23565	22584	21680	20846	20074	19357	18690	18067	15486	13550	12044	10840	9854	9033	8338	7743	6775	6022	5420
87	23840	22846	21932	21089	20308	19582	18907	18277	15666	13707	12184	10966	9969	9138	8435	7833	6853	6092	5483
88	24114	23109	22184	21331	20541	19807	19124	18487	15846	13865	12324	11092	10084	9243	8532	7923	6932	6162	5546
89	24388	23371	22436	21574	20775	20033	19342	18697	16026	14023	12464	11218	10198	9348	8629	8013	7011	6232	5609
90	24662	23634	22689	21816	21008	20258	19559	18907	16206	14180	12605	11344	10313	9453	8726	8103	7090	6302	5672
91	24936	23897	22941	22058	21241	20483	19776	19117	16386	14338	12745	11470	10427	9558	8823	8193	7169	6372	5735
92	25210	24159	23193	22301	21475	20708	19994	19327	16566	14495	12885	11596	10542	9663	8920	8283	7247	6442	5798
93	25484	24422	23445	22543	21708	20933	20211	19537	16746	14653	13025	11722	10656	9768	9017	8373	7326	6512	5861
94	25758	24684	23697	22786	21942	21158	20428	19747	16926	14810	13165	11848	10771	9873	9114	8463	7405	6582	5924
95	26032	24947	23949	23028	22175	21383	20646	19957	17106	14968	13305	11974	10886	9978	9211	8553	7484	6652	5987
96	26306	25210	24201	23270	22408	21608	20863	20168	17286	15126	13445	12100	11000	10084	9308	8643	7562	6722	6050
97	26580	25472	24453	23513	22642	21833	21080	20378	17466	15383	13585	12226	11115	10189	9405	8733	7641	6792	6113
98	26854	25735	24705	23755	22875	22058	21298	20588	17647	15441	13725	12352	11229	10294	9502	8823	7720	6862	6176
99	27128	25997	24957	23998	23109	22283	21515	20798	17827	15598	13865	12478	11344	10399	9599	8913	7799	6932	6239
100	27402	26260	25210	24240	23342	22509	21732	21008	18007	15756	14005	12605	11459	10504	9696	9003	7878	7002	6302

Electrical Formulas

To Find	Alternating Current Single-Phase	Alternating Current Three-Phase
Amperes when horsepower is known	$\frac{HP \times 746}{E \times Eff. \times pf}$	$\frac{HP \times 746}{1.73 \times E \times Eff. \times pf}$
Amperes when kilowatts are known	$\frac{Kw \times 1000}{E \times pf}$	$\frac{Kw \times 1000}{1.73 \times E \times pf}$
Amperes when Kva are known	$\frac{Kva \times 1000}{E}$	$\frac{Kva \times 1000}{1.73 \times E}$
Kilowatts	$\frac{I \times E \times pf}{1000}$	$\frac{1.73 \times I \times E \times pf}{1000}$
Kva	$\frac{I \times E}{1000}$	$\frac{1.73 \times I \times E}{1000}$
Horsepower = (Output)	$\frac{I \times E \times Eff. \times pf}{746}$	$\frac{1.73 \times I \times E \times Eff. \times pf}{746}$

I = Amperes; E = Volts; Eff. = Efficiency; pf = power factor;
Kva = Kilovolt amperes; Kw = Kilowatts; R = Ohms

To Find	Alternating or Direct Current
Amperes when voltage and resistance is known	$\frac{E}{R}$
Voltage when resistance and current are known	IR
Resistance when voltage and current are known	$\frac{E}{I}$

General Information (Approximation)

All Values At 100% Load

- At 1800 RPM, a motor develops 36 lb.-in. per hp
- At 1200 RPM, a motor develops 54 lb.-in. per hp
- At 575 volts, a 3-phase motor draws 1 amp per hp
- At 460 volts, a 3-phase motor draws 1.25 amp per hp
- At 230 volts, a 3-phase motor draws 2.5 amp per hp
- At 230 volts, a single-phase motor draws 5 amp per hp
- At 115 volts, a single-phase motor draws 10 amp per hp

Temperature Conversion:

Deg C = (Deg F - 32) × ⅝
Deg F = (Deg C × ⅝) + 32

Motor Amps @ Full Load †

HP	Alternating Current Single Phase	Alternating Current 3-Phase	DC	HP	Alternating Current Single Phase	Alternating Current 3-Phase	DC	HP	Alternating Current Single Phase	Alternating Current 3-Phase	DC	HP	Alternating Current Single Phase	Alternating Current 3-Phase	DC
½	4.9	2.0	2.7	5	28	14.4	20	25	....	60	92	75	....	180	268
1	8.0	3.4	4.8	7½	40	21.0	29	30	....	75	110	100	....	240	355
1½	10.0	4.8	6.6	10	50	26.0	38	40	....	100	146	125	....	300	443
2	12.0	6.2	8.5	15	....	38.0	56	50	....	120	180	150	....	360	534
3	17.0	8.6	12.5	20	....	50.0	74	60	....	150	215	200	....	480	712

† Values are for all speeds and frequencies @ 230 volts.
Amperage other than 230 volts can be figured:

$$V = \frac{230 \times \text{Amp from Table}}{\text{New Voltage}}$$

Example:

For 60 HP, 3 phase @ 550 volts: $\frac{(230 \times 150)}{550} = 62$ amps.

Power Factor estimated @ 80% for most motors. Efficiency is usually 80-90%.

NEMA Electrical Enclosure Types

Type	Description	Type	Description
NEMA Type 1 (General Purpose)	For indoor use wherever oil, dust, or water is not a problem	NEMA Type 5 Dust Tight (Non-Hazardous)	Used for excluding dust (All NEMA 12 and JIC enclosures are usually suitable for NEMA 5 use)
NEMA Type 2 (Driptight)	Used indoors to exclude falling moisture and dirt	NEMA Type 9 Dust Tight (Hazardous)*	For locations where combustible dusts are present
NEMA Type 3 (Weatherproof)	Provides protection against rain, sleet, and snow	NEMA Type 12 (Industrial Use)	Used for excluding oil, coolant, flying dust, lint, etc
NEMA Type 4 (Watertight)†	Needed when subject to great amounts of water from any angle — such as areas which are repeatedly hosed down		

NOTE: Joint Industry Conference (JIC) enclosures are similar in design to NEMA 12's.
For more complete details see NEMA or JIC Standards for enclosures.
† Not designed to be submerged.
* Class II Groups E, F, and G.

NEMA Frame Designation

NEMA Frame Designation

Frame Assignments

HP	Motor Speed, RPM 3600	1800	1200	900	HP	Motor Speed, RPM 3600	1800	1200	900
1/6-1/3	—	48	—	—	15	215T, 256U	254T, 284U	284T, 324U	286T, 326U
1/8-1/2	48	—	56	—	20	254T, 284U	256T, 286U	286T, 326U	324T, 364U
1/6	—	—	48	—	25	256T, 286U	284T, 324U	324T, 364U	326T, 365U
1/3- 1	—	56	—	—	30	284TS, 324S	286T, 326U	326T, 365U	364T, 404U
3/4- 1	56	—	—	—	40	286TS, 326S	324T, 364U	364T, 404U	365T, 405U
1/2	—	—	—	143T	50	324TS, 364US	326T, 365U, 365US	365T, 405U	404T, 444U
3/4	—	—	143T	145T	60	326TS, 365US	364TS▲, 404U, 404US	404T, 444U	405T, 445U
1	—	143T	145T	182T	75	364TS, 404US	365TS▲, 405U, 405US	405T, 445U	444T
1 1/2	143T	145T	182T	184T	100	365TS, 405US	404TS▲, 444US	444T	445T
2	145T	145T	184T	213T	125	404TS, 444US	405TS▲, 445US	445T	—
3	145T	182T	213T	215T, 254U	150	405TS, 445US	444TS▲	—	—
5	182T	184T	215T, 254U	254T, 256U	200	444TS	445TS▲	—	—
7 1/2	184T	213T, 254U	254T, 256U	256T, 284U	250	445TS	—	—	—
10	213T, 254U	215T, 256U	256T, 284U	284T, 286U	—	—	—	—	—

Motor Frame Dimensions

Frame Size	D	E	2F	H Dia. (4) Holes	U Dia.	BA	V Min.	Key
48	3	2 1/8	2 3/4	11/32	1/2	2 1/2	...	3/64 FLAT
56	3 1/2	2 7/16	3	11/32	5/8	2 3/4	...	3/16 × 3/16 × 1 3/8
143T	3 1/2	2 3/4	4	11/32	7/8	2 1/4	2	3/16 × 3/16 × 1 3/8
145T	3 1/2	2 3/4	5	11/32	7/8	2 1/4	2	3/16 × 3/16 × 1 3/8
182T	4 1/2	3 3/4	4 1/2	13/32	1 1/8	2 3/4	2 1/2	1/4 × 1/4 × 1 3/4
184T	4 1/2	3 3/4	5 1/2	13/32	1 1/8	2 3/4	2 1/2	1/4 × 1/4 × 1 3/4
213T	5 1/4	4 1/4	5 1/2	13/32	1 3/8	3 1/2	3 1/8	5/16 × 5/16 × 2 3/8
215T	5 1/4	4 1/4	7	13/32	1 3/8	3 1/2	3 1/8	5/16 × 5/16 × 2 3/8
254U	6 1/4	5	8 1/4	17/32	1 3/8	4 1/4	3 1/2	5/16 × 5/16 × 2 3/4
254T	6 1/4	5	8 1/4	17/32	1 5/8	4 1/4	3 3/4	3/8 × 3/8 × 2 7/8
256U	6 1/4	5	10	17/32	1 3/8	4 1/4	3 1/2	5/16 × 5/16 × 2 3/4
256T	6 1/4	5	10	17/32	1 5/8	4 1/4	3 3/4	3/8 × 3/8 × 2 7/8
284U	7	5 1/2	9 1/2	17/32	1 5/8	4 3/4	4 5/8	3/8 × 3/8 × 3 3/4
284T	7	5 1/2	9 1/2	17/32	1 7/8	4 3/4	4 3/8	1/2 × 1/2 × 3 1/4
284TS	7	5 1/2	9 1/2	17/32	1 5/8	4 3/4	3	3/8 × 3/8 × 1 7/8
286U	7	5 1/2	11	17/32	1 5/8	4 3/4	4 5/8	3/8 × 3/8 × 3 3/4
286T	7	5 1/2	11	17/32	1 7/8	4 3/4	4 3/8	1/2 × 1/2 × 3 1/4
286TS	7	5 1/2	11	17/32	1 5/8	4 3/4	3	3/8 × 3/8 × 1 7/8
324U	8	6 1/4	10 1/2	21/32	1 7/8	5 1/4	5 3/8	1/2 × 1/2 × 4 1/4
324T	8	6 1/4	10 1/2	21/32	2 1/8	5 1/4	5	1/2 × 1/2 × 3 7/8
324TS	8	6 1/4	10 1/2	21/32	1 7/8	5 1/4	3 1/2	1/2 × 1/2 × 2
326U	8	6 1/4	12	21/32	1 7/8	5 1/4	5 3/8	1/2 × 1/2 × 4 1/4
326T	8	6 1/4	12	21/32	2 1/8	5 1/4	5	1/2 × 1/2 × 3 7/8
326TS	8	6 1/4	12	21/32	1 7/8	5 1/4	3 1/2	1/2 × 1/2 × 2
364U	9	7	11 1/4	21/32	2 1/8	5 7/8	6 1/8	1/2 × 1/2 × 5
364US	9	7	11 1/4	21/32	1 7/8	5 7/8	3 1/2	1/2 × 1/2 × 2
364T	9	7	11 1/4	21/32	2 3/8	5 7/8	5 5/8	5/8 × 5/8 × 4 1/4
364TS	9	7	11 1/4	21/32	1 7/8	5 7/8	3 1/2	1/2 × 1/2 × 2
365U	9	7	12 1/4	21/32	2 1/8	5 7/8	6 1/8	1/2 × 1/2 × 5
365US	9	7	12 1/4	21/32	1 7/8	5 7/8	3 1/2	1/2 × 1/2 × 2
365T	9	7	12 1/4	21/32	2 3/8	5 7/8	5 5/8	5/8 × 5/8 × 4 1/4
365TS	9	7	12 1/4	21/32	1 7/8	5 7/8	3 1/2	1/2 × 1/2 × 2
404U	10	8	12 1/4	13/16	2 3/8	6 5/8	6 7/8	5/8 × 5/8 × 5 1/2
404US	10	8	12 1/4	13/16	2 1/8	6 5/8	4	1/2 × 1/2 × 2 3/4
404T	10	8	12 1/4	13/16	2 7/8	6 5/8	7	3/4 × 3/4 × 5 5/8
404TS	10	8	12 1/4	13/16	2 1/8	6 5/8	4	1/2 × 1/2 × 2 3/4
405U	10	8	13 3/4	13/16	2 3/8	6 5/8	6 7/8	5/8 × 5/8 × 5 1/2
405US	10	8	13 3/4	13/16	2 1/8	6 5/8	4	1/2 × 1/2 × 2 3/4
405T	10	8	13 3/4	13/16	2 7/8	6 5/8	7	3/4 × 3/4 × 5 5/8
405TS	10	8	13 3/4	13/16	2 1/8	6 5/8	4	1/2 × 1/2 × 2 3/4
444U	11	9	14 1/2	13/16	2 7/8	7 1/2	8 3/8	3/4 × 3/4 × 7
444US	11	9	14 1/2	13/16	2 1/8	7 1/2	4	1/2 × 1/2 × 2 3/4
444T	11	9	14 1/2	13/16	3 3/8	7 1/2	8 1/4	7/8 × 7/8 × 6 7/8
444TS	11	9	14 1/2	13/16	2 3/8	7 1/2	4 1/2	5/8 × 5/8 × 3
445U	11	9	16 1/2	13/16	2 7/8	7 1/2	8 3/8	3/4 × 3/4 × 7
445US	11	9	16 1/2	13/16	2 1/8	7 1/2	4	1/2 × 1/2 × 2 3/4
445T	11	9	16 1/2	13/16	3 3/8	7 1/2	8 1/4	7/8 × 7/8 × 6 7/8
445TS	11	9	16 1/2	13/16	2 3/8	7 1/2	4 1/2	5/8 × 5/8 × 3

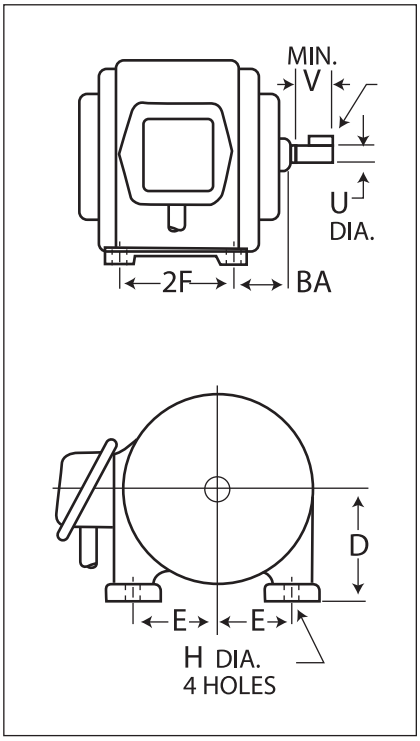

Shaded area indicates typical single phase standard squirreM-cage, open type, a-c motors. Balance of table same except three phase, design A and B.

▲ When these motors are used with V-belt or chain drives, the correct frame size is the one with the suffix "S" omitted — consult manufacturer.

Shaft Selection

Important factors to consider when calculating shaft size

(a) shafting is subject to a **bending moment** and a **torsional moment.**

(b) bending moment is that force which tends to **bend** a shaft.

(c) torsional moment is that force which tends to **twist** a shaft.

(d) shaft size is determined by the **combined action** of the bending and torsional moments.

Refer to Shaft Selection Charts 2 and 3 developed by the American Society of Mechanical Engineers to simplify selection. The charts should be used in conjunction with Service Factors (Table 1) to modify the selection for conditions under which the shaft will operate.

A = Shaft length from center of bearing to center of load
L = Unbalanced load in pounds
W = Suspended weight of elevator (chain, buckets, etc.) in pounds
R = Radius of wheel in inches
B = Bending moment
T = Torsional moment

$$B = A\,\frac{L + W}{2} \text{ inch pounds}$$

$$T = R \times L \text{ inch pounds}$$

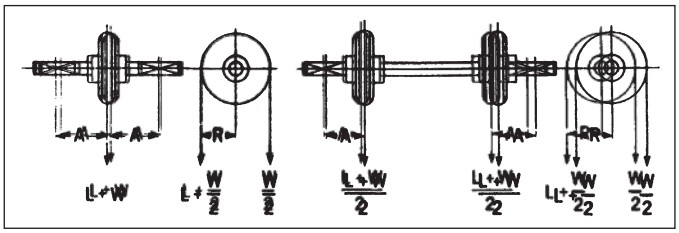

Selection Procedure

1. compute the Bending Moment from the above formula.
2. determine the Service Factor for bending that will suit conditions from Table 1.
3. compute the Torsional Moment from the above formula.
4. determine the Service Factor for torsion that will suit conditions from Table 1.
5. draw a horizontal line across Selection Chart 2 or 3 on pages M-10 and M-11, from the point where the **torsional moment intersects** its selected Service Factor line.
6. draw a vertical lineup Selection Chart 2 or 3 from the point where the **bending moment intersects** its selected factor line.
7. intersection of above lines will give required shaft size.
8. for shafts not weakened by keyways, multiply the shaft size obtained by .91 for the corrected shaft size. See note at the bottom of Selection Chart 3.

Horsepower required may be computed directly from the right-hand side of Selection Charts by correcting the figure in line with the horizontal torsional moment line by the speed in RPM.

Table 1 • Service Factors

Type of Loading	Service Factor	
	For Bending	For Torsion
Stationary Shafts –		
Gradually applied loads	1.0	1.0
Suddenly applied loads	1.5 to 2.0	1.5 to 2.0
Rotating Shafts –		
Gradually applied or steady loads	1.5	1.0
Suddenly applied loads – Minor shock only	1.5 to 2.0	1.0 to 1.5
Suddenly applied loads – Heavy shock	2.0 to 2.5	1.5 to 2.5

Selection Example:

Select shaft size for head shaft of chain conveyor subject to following requirements:

(a) Torsion (inch/lbs) — 20,500
(b) Bending moment (inch/lbs) — 13,300
(c) Service Factors:
torsion — 1.0
bending — 1.5

At the extreme left on Selection Chart 2, the torsion moment may be found for the Service Factor of 1.0. Draw a horizontal line to the right from the 20,500 point. The bending moment is given at the bottom of the chart. Find the 13,300 point; draw a line from this point to the right on the diagonal until it intersects the 1.5 Service Factor line, then project the line upward vertically until it intersects the horizontal line drawn from the 20,500 torsion point. At this intersection point, it is found that a shaft of approximately $2^{13}/_{16}$" diameter is required.

Select the nearest standard size shaft which is $2^{15}/_{16}$".

For a shaft subjected to the same conditions, but not weakened by keyways, the size of the shaft required would be (.91 × 2.8125) or 2.56 ($2^{9}/_{16}$"). See note at the bottom of the charts.

On this same chart at the right, the horsepower ratings at 100 RPM are given based on the formula:

$$HP = \frac{TS}{63{,}000}$$

T = Torque in inch-pounds
S = Speed in RPM
The horsepower is directly proportional to the speed of the shaft in RPM.

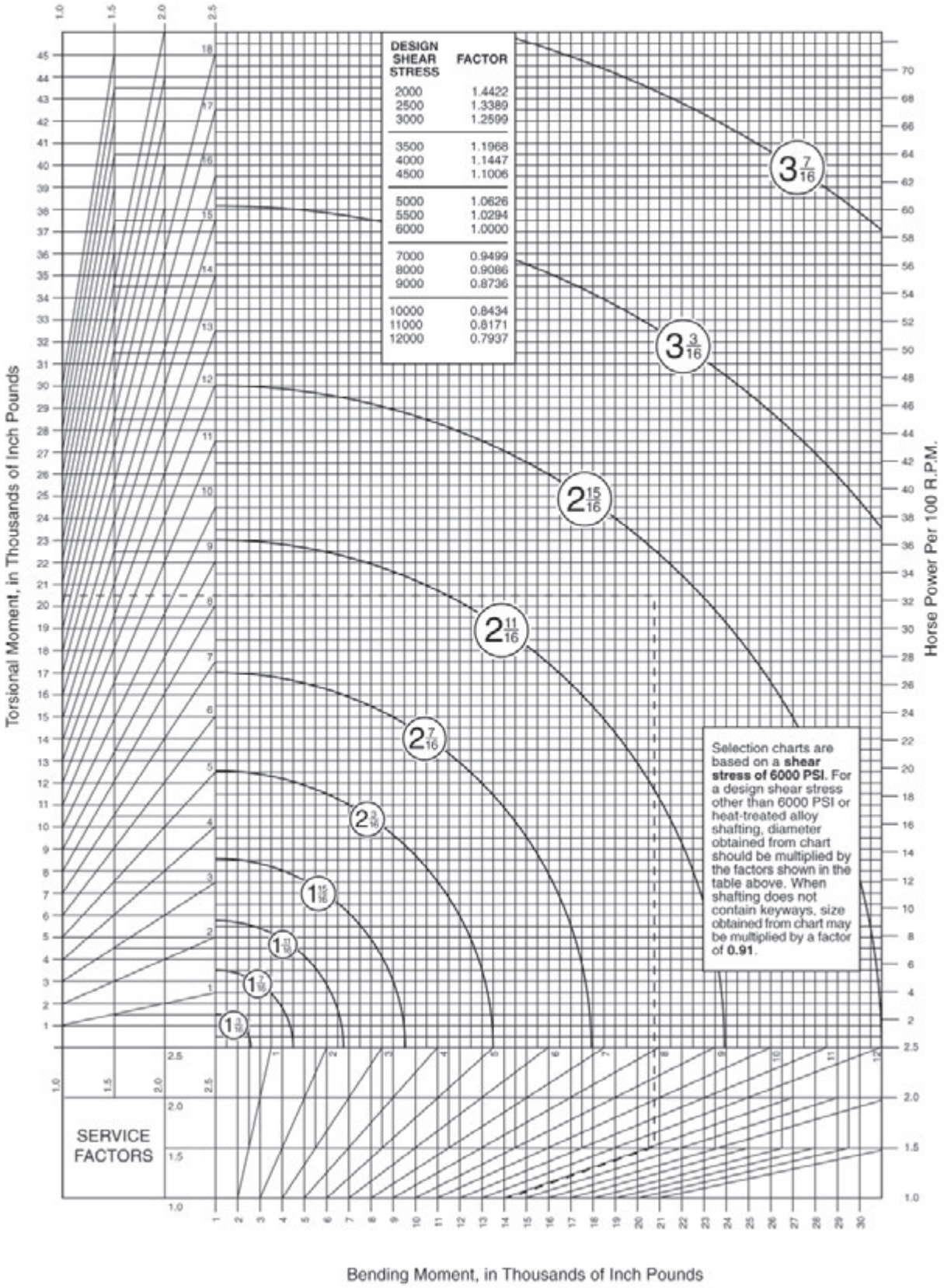

DESIGN SHEAR STRESS	FACTOR
2000	1.4422
2500	1.3389
3000	1.2599
3500	1.1968
4000	1.1447
4500	1.1006
5000	1.0626
5500	1.0294
6000	1.0000
7000	0.9499
8000	0.9086
9000	0.8736
10000	0.8434
11000	0.8171
12000	0.7937

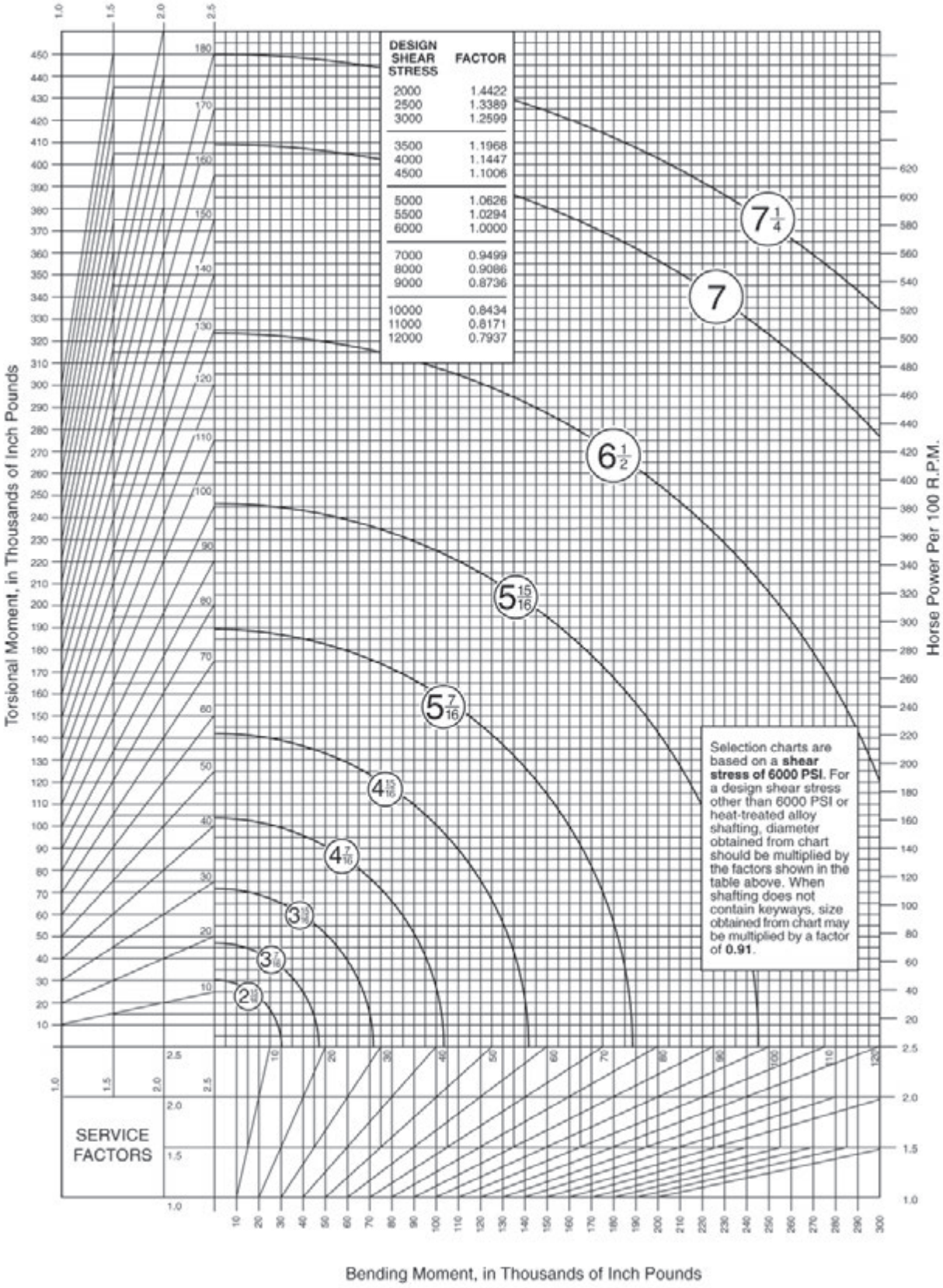
DESIGN SHEAR STRESS
FACTOR
2000 1.4422
2500 1.3389
3000 1.2599
3500 1.1968
4000 1.1447
4500 1.1006
5000 1.0626
5500 1.0294
6000 1.0000
7000 0.9499
8000 0.9086
9000 0.8736
10000 0.8434
11000 0.8171
12000 0.7937
Selection charts are based on a **shear stress of 6000 PSI**. For a design shear stress other than 6000 PSI or heat-treated alloy shafting, diameter obtained from chart should be multiplied by the factors shown in the table above. When shafting does not contain keyways, size obtained from chart may be multiplied by a factor of **0.91**.
SERVICE FACTORS
Torsional Moment, in Thousands of Inch Pounds
Horse Power Per 100 R.P.M.
Bending Moment, in Thousands of Inch Pounds

Flywheel Formulas

Flywheels are occasionally used on a few machines, such as air compressors, to even out load pulsations. These formulas are useful in designing entire flywheel rims. It is also possible to use V-Belt sheaves as a flywheel thus eliminating the need for a separate flywheel in the system. Consult Martin with specific requirements.

Formulas for Entire Flywheel

W = weight (pounds)
R = radius of gyration (feet)
N = speed (RPM)
t = time to change from N_1 to N_2 (seconds)
F = face of rim (inches)
D = outside diameter of rim (inches)
d = inside diameter of rim (inches)
P = weight per cubic inch of material (pounds)

Kinetic energy of rotation of a flywheel (foot pounds) = $.0001705\ N^2(WR^2)$*.

Torque to accelerate or decelerate a flywheel uniformly (pound inches) $= \dfrac{.03908(N_2 - N_1)(WR^2)^*,}{t}$

where N_2 = final RPM and N_1 = initial RPM
Velocity at outside diameter (feet per minute) = 0.2618 ND

*WR^2 = flywheel effect (pounds × feet^2). See table below for WR^2 of rims. Ordinarily the WR^2 of the rim only is considered. In unusual instances the relatively small WR^2 values of the hub and arms or web can be added directly to the WR^2 of the rim if desired. To find the WR^2 of a hub or web use the WR^2 formula for rims, substituting the hub or web outside diameter, inside diameter, and width for D, d, and F respectively. When arms are used instead of a web an approximate WR^2 value of the arms is the total weight of the arms in pounds times the square of the radius in feet from the shaft center line to the mid-point of the arms between hub and rim.

Formulas for Flywheel Rims

Property	Cast Iron Rim (Based on .26 lbs per cubic inch)	Steel Rim Rim (Based on .283 lbs per cubic inch)	Rim of any Material (Weighing P Pounds per cubic inch)
Volume (Cubic Inches)	$.7854F(D^2 - d^2)$	$.7854F(D^2 - d^2)$	$.7854F(D^2 - d^2)$
W Weight (Pounds)	$.2042F(D^2 - d^2)$	$.2223F(D^2 - d^2)$	$.7854FP(D^2 - d^2)$
R Radius of Gyration (Feet)	$\sqrt{\dfrac{.8681(D^2 + d^2)}{1000}}$	$\sqrt{\dfrac{.8681(D^2 + d^2)}{1000}}$	$\sqrt{\dfrac{.8681(D^2 + d^2)}{1000}}$
WR^2 Wt. × Sq. of Radius of Gyration (Lbs. × Ft.^{2})	$\dfrac{.1773F(D^4 - d^4)}{1000}$	$\dfrac{.1929F(D^4 - d^4)}{1000}$	$\dfrac{.6818FP(D^4 - d^4)}{1000}$
Ts Tensile Load in Rim (Lbs.)	$\dfrac{.3078FN^2(D^3 - d^3)}{1{,}000{,}000}$	$\dfrac{.3350FN^2(D^3 - d^3)}{1{,}000{,}000}$	$\dfrac{1.184PFN^2(D^3 - d^3)}{1{,}000{,}000}$

▲ Centrifugal force causes this tensile load at each and every section of the rim. Thus on rims split into two or more sections, the fastening at each joint should be designed to take the full load as calculated from the formula below.

Centrifugal Force

R = Distance from the axis of rotation to the center of gravity of the body (feet)

N = Revolutions per minute (RPM)

v = Velocity of the center of gravity of the body (feet per second)

g = Acceleration due to gravity (32.16 commonly)

$$F = \frac{Wv^2}{gR} = \frac{WRN^2}{2933} = .000341\ WRN^2$$

F = Centrifugal force tending to move the body outward from the axis of rotation (pounds)

W = Weight of body (pounds)

Weights of Steel

NOTE: The steel weights in this section are nominal and are based on an approximate weight of 40.80 pounds per square foot, one inch thick. There may be differences between nominal weights and actual scale weights because of variation in manufacturing practices.

Hot Rolled and Cold Finished Steel Products Nominal Weight

Product	Thickness	Width	Length	Formulas
Plates, Strip and Flats	Inches	Inches	Inches	.2833 × T × W × L
	Inches	Inches	Feet	3.4 × T × W × L
	Inches	Feet	Feet	40.8 × T × W × L
	USS. Ga No.	Feet	Feet	Wt./Sq. Ft. × W × L
	Wt. per Sq. Ft.	Feet	Feet	Wt./Sq. Ft. × W × L
Hot and C.R. Sheets	Inches	Inches	Inches	.2904 × T × W × L
	Inches	Inches	Feet	3.485 × T × W × L
	Inches	Feet	Feet	41.82 × T × W × L
	USS. Ga No.	Feet	Feet	Wt./Sq. Ft. × W × L
	Wt. per Sq. Ft.	Feet	Feet	Wt./Sq. Ft. × W × L

		Thickness	Diameter	
Plate Circles		Inches	Inches	.2225 × T × D^2
		Inches	Feet	32.05 × T × D^2
Sheet Circles		Inches	Inches	.228 × T × D^2
		Inches	Feet	32.85 × T × D^2
		Diameter	Length	
Bars	Square	Inches	Feet	3.4 × D^2 × L
	Round	Inches	Feet	2.67 × D^2 × L
	Hexagon	Inches	Feet	2.945 × D^2 × L
	Octagon	Inches	Feet	2.817 × D^2 × L

T = thickness L = length W = width D = diameter

Steel Rounds

Size in Inches	Pounds Per Foot	Size in Inches	Pounds Per Foot
7/8	2.04	2 15/16	23.04
15/16	2.35	3	24.03
1	2.67	3 1/16	25.05
1 1/16	3.01	3 1/8	26.08
1 1/8	3.38	3 3/16	27.13
1 3/16	3.77	3 1/4	28.20
1 1/4	4.17	3 5/16	29.30
1 5/16	4.60	3 3/8	30.42
1 3/8	5.05	3 7/16	31.55
1 7/16	5.52	3 1/2	32.71
1 1/2	6.01	3 9/16	33.89
1 9/16	6.52	3 5/8	35.09
1 5/8	7.05	3 11/16	36.31
1 11/16	7.60	3 3/4	37.55
1 3/4	8.18	3 15/16	38.81
1 13/16	8.77	3 7/8	40.10
1 7/8	9.39	3 15/16	41.40
1 15/16	10.02	4	42.73
2	10.68	4 1/16	44.07
2 1/16	11.36	4 1/8	45.44
2 1/8	12.06	4 3/16	46.83
2 3/16	12.78	4 1/4	48.23
2 1/4	13.52	4 5/16	49.66
2 3/16	14.28	4 3/8	51.11
2 3/8	15.06	4 7/16	52.58
2 7/16	15.87	4 1/2	54.08
2 1/2	16.69	4 9/16	55.59
2 9/16	17.53	4 5/8	57.12
2 5/8	18.40	4 11/16	58.68
2 11/16	19.29	4 3/4	60.25
2 3/4	20.19	4 13/16	61.85
2 13/16	21.12	4 7/8	63.46
2 7/8	22.07	4 15/16	65.10

Standard Sheet Weights

Ga. Number	Thickness in Inches	Weight Per Square Foot in Pounds
	Over 3/16" are plates	
7	.1793	7.500
8	.1644	6.875
9	.1494	6.250
10	.1345	5.625
11	.1196	5.000
12	.1046	4.375
13	.0897	3.750
14	.0747	3.125
15	.0673	2.812
16	.0598	2.500

Carbon Steel Plates

Size in Inches	Weight Per Square Foot in Pounds
3/16	7.76
1/4	10.20
5/16	12.75
3/8	15.30
7/16	17.85
1/2	20.40
9/16	22.95
5/8	25.50
3/4	30.60
13/16	33.15
7/8	35.70
1	40.80
1 1/8	45.90
1 1/4	51.00
1 3/8	56.10
1 1/2	61.20

NOTE: Stainless Steel weighs approximately 10% more than Carbon Steel.

Properties of Steel

The information shown below is offered as a general guide to physical properties of steel in common use. Lower tensile properties are to be expected in large sections; the values of strength decrease as the size of the section increases. These values are not guaranteed and must **NOT** be used in specifying the raw materials or as a basis for acceptance or rejection of material. It must not be assumed that these properties will be obtained in all cases as they vary widely with permissible variations in analysis, size of section, rolling conditions, grain size, and methods of heat treatment. Dependable physical properties can only be obtained through carefully controlled analysis and heat treatment.

Average Properties of Standard Steels

AISI Number	SAE Number	Condition of Steel	Strength in1000 PSI		% Elong. in 2"	% Red. of Area	Hardness		Machinability % of B1112 CD
			Tensile	Yield			Brinell	Rockwell	
B1112	1112	COLD DRAWN BESSEMER	75-90	60-70	12-16	40-50	170-185	80-95B	100
C1018	1018	NATURAL HOT ROLLED	55-70	40-50	25-35	50-65	120-140	.....	55
		COLD DRAWN	70-85	50-70	18-25	45-55	160-180	80-90B	65
		1" RD. CARBURIZED AT 1700°F, COOLED IN BOX, REHEATED, QUENCHED – CORE PROPERTIES	90-100	60-80	10-22	35-50	200-230	93-98B	.....
C1020	1020	NATURAL HOT ROLLED	60-80	40-50	25-35	50-65	120-145	60-98B	50
		COLD DRAWN	70-80	45-70	15-25	45-60	120-160	70-85B	60
C1117	1117	NATURAL HOT ROLLED	60-70	37-47	20-30	45-60	135-150	.....	80
		COLD DRAWN	80-90	60-75	15-20	40-50	160-190	80-90B	90
		1" RD. CARBURIZED AT 1700°F, COOLED IN BOX, REHEATED, QUENCHED – CORE PROPERTIES	95-110	60-85	10-25	35-50	210-240	15-22C	.....
C1035	1035	NATURAL HOT ROLLED	75-85	40-55	18-25	40-55	155-175	.....	60
		COLD DRAWN	85-95	65-80	15-25	40-50	170-200	85-95B	65
		1" RD. QUENCHED, TEMPERED 1000°F	95-105	70-80	20-25	55-60	195-220	93-98B	55
C1040	1040	NATURAL HOT ROLLED	80-90	45-55	18-25	35-50	165-185	.....	60
		COLD DRAWN	90-100	70-85	14-20	35-50	190-215	91-98B	62
		1" RD. QUENCHED, TEMPERED 1000°F	100-110	75-85	15-25	45-60	210-240	17-23C	52
C1042	1042	NATURAL HOT ROLLED	85-95	50-60	15-25	35-50	175-205	.....	58
		COLD DRAWN	90-105	75-90	12-20	30-45	185-215	.....	60
		1" RD. QUENCHED, TEMPERED 1000°F	105-120	80-90	15-25	40-60	215-250	.....	.....
C1045	1045	NATURAL HOT ROLLED	85-105	50-65	15-25	35-45	175-215	.....	55
		COLD DRAWN	90-110	75-90	12-20	30-45	195-230	95-99B	58
		1" RD. QUENCHED, TEMPERED 1000°F	110-130	80-95	12-25	40-55	235-260	22-26C	47
C1141	1141	NATURAL HOT ROLLED	90-110	60-80	15-25	25-45	180-220	.....	65
		COLD DRAWN	100-120	85-105	8-18	20-50	195-230	.....	70
		1" RD. QUENCHED, TEMPERED 1000°F	120-145	100-130	10-20	35-50	270-310	.....	.....
C1144	1144	NATURAL HOT ROLLED	95-110	60-85	15-25	30-45	200-240	.....	75
		COLD DRAWN	100-120	90-115	7-17	20-45	210-245	17-23C	85
		1" RD. QUENCHED, TEMPERED 1000°F	130-150	110-130	15	45	286-302	29-31C	.....
C1050	1050	NATURAL HOT ROLLED	95-110	55-70	15-20	25-40	210-325	.....	50
		1" RD. QUENCHED, TEMPERED 1000°F	115-135	85-100	10-22	35-50	240-265	23-27C	.....
4140	4140	HOT ROLLED, ANNEALED	90-100	60-70	20-30	50-60	185-210	91-95B	55
		COLD DRAWN, ANNEALED	110-120	85-95	15-25	45-55	230-250	20-25C	65
		HEAT TREATED, COLD DRAWN	140-155	125-140	12-20	45-55	270-300	26-30C	45
		1" RD. QUENCHED, TEMPERED 1000°F	150-160	130-140	15-20	50-60	320-350	34-37C	.....
		2" RD. QUENCHED, TEMPERED 1000°F	145-155	125-135	15-20	50-60	320-345	33-36C	.....
		3" RD. QUENCHED, TEMPERED 1000°F	130-145	115-125	15-20	55-65	280-310	28-32C	.....
E52100	52100	HOT ROLLED, ANNEALED	100-110	75-85	20-25	50-60	210-235	.....	45
		1" RD. QUENCHED, TEMPERED 1000°F	180-195	65-80	10-15	35-45	375-415	40-43C	.....
8620	8620	NATURAL HOT ROLLED	90-95	55-65	18-25	45-60	160-200	85-95B	55
		COLD DRAWN	90-105	65-80	15-25	40-50	185-215	90-96B	60-70
		1" RD. CARBURIZED 1700°F., COOLED IN BOX, REHEATED, QUENCHED – CORE PROPERTIES	120-135	90-110	15-20	40-50	285-350	28-40C	.....
8645	8645	NATURAL HOT ROLLED	105-125	55-75	15-25	35-50	220-270	20-28C	48-55
		HOT ROLLED, ANNEALED	100-110	50-60	20-25	40-55	210-230	17-21C	54
		2" RD. QUENCHED, TEMPERED 1000°F	140-150	110-125	15-20	45-55	300-320	30-34C	.....
		3" RD. QUENCHED, TEMPERED 1000°F	130-140	105-115	15-20	50-60	285-310	29-32C	.....
8742	8742	NATURAL HOT ROLLED	110-125	50-70	15-25	35-50	230-270	22-28C	45-50
		COLD DRAWN, ANNEALED	105-120	95-105	10-18	35-45	210-235	95-99B	60
		1" RD. QUENCHED, TEMPERED 1000°F	155-165	135-145	15-20	45-52	330-335	35-38C	.....
		2" RD. QUENCHED, TEMPERED 1000°F	135-145	110-120	15-20	50-60	290-320	30-33C	.....

Physical Properties of Various Metals

Metals and Alloys	Stress in Thousands of Pounds per Square Inch				Modulus of Elasticity 1,000,000 Lbs.	Elongation %
	Tension Ultimate	Tension Yield Point	Compression Ultimate	Shear Ultimate		
ALUMINUM, TYPE 3003-0, ANNEALED	16	6	.....	11	10	40
ALUMINUM, TYPE 3003-H18, HARD	29	27	.....	16	10	10
ALUMINUM, TYPE 5052-0, ANNEALED	28	13	.....	18	10.2	30
ALUMINUM, TYPE 5052-H38, HARD	42	37	.....	24	10.2	8
ALUMINUM, TYPE 5056-0, ANNEALED	42	22	.....	26	10.3	35
ALUMINUM, TYPE 2014-0, ANNEALED	27	14	.....	18	10.6	18
ALUMINUM, TYPE 2014-T4, HEAT TREATED	62	42	.....	38	10.6	20
ALUMINUM, TYPE C4A, CASTING, SOLUTION HEAT TREAT	32	16	16▲	24	.....	8.5
ALUMINUM, TYPE S5C, AS DIE CAST	30	16	16▲	19	.....	9
BRASS, ALUMINUM, ANNEALED	60	27	.....	.....	16	55
BRASS, RED, 15% ZN, ANNEALED	39	10	.....	31	17	48
BRASS, RED, 15% ZN, HARD	70	57	.....	42	17	5
BRASS, RED, LEADED, CAST, GRADE 4A	33-46	17-24	10-12▲	.....	9.1-14.8	20-35
BRASS, RED, LEADED, CAST, GRADE 4B	30-38	12-17	11-12▲	.....	.....	15-27
BRASS, YELLOW, 35% ZN, ANNEALED	46	14	.....	32	15	65
BRASS, YELLOW, 35% ZN, HARD	74	60	.....	43	15	8
BRONZE, ALUMINUM, AS CAST	67-95	27-45	.....	.....	15-18	5-35
BRONZE, COMMERCIAL, 10% ZN, ANNEALED	37†	10†	.....	28†	17	45†
BRONZE, MANGANESE, ANNEALED	65†	30†	.....	42†	15	33†
BRONZE, PHOSPHOR, ANNEALED	40-66	14-24	.....	.....	16-17	48-70
BRONZE, TIN, HIGH LEADED, CAST	23-38	11-22	12-16▲	.....	8.5-13	7-20
BRONZE, TIN, LEADED, CAST	33-48	16-26	9-15▲	.....	10.6-16	15-40
COPPER, BERYLLIUM, ANNEALED	60-80†	25-35†	.....	50-60†	19	35-50†
INCONEL, CAST	65-90	.....	.....	.....	23	10-20
INCONEL, S, CAST	90-120	80-100	.....	.....	25	1-3
IRON, CAST, CLASS 30	30-34	.....	115	44	15	.....
IRON, CAST, CLASS 35	35-40	.....	125	43	16	.....
IRON, MALLEABLE, CLASS 32510	50	33	90	46	25	10-18
IRON, MALLEABLE, CLASS 35018	55	37	90	51	25	18-25
IRON, NODULAR (DUCTILE) CLASS 60-45-10	60	45	120	.....	22-25	10-25
IRON, NODULAR (DUCTILE) CLASS 80-60-3	80	60	160	.....	22-25	3-10
IRON, PEARLITIC, MALLEABLE	60-90	40-70	.....	.....	28	3-12
IRON, WROUGHT, HOT ROLLED	34-47	23-24	.....	.....	29	7-35
LEAD, HARD, ROLLED	4.0-4.6	.....	.....	.....	.....	31-48
MONEL, CAST	65-90	32-45	.....	.....	23	20-50
MONEL, S, CAST	120-145	80-130	.....	.....	24.2	1-4
MONEL, SHAPES, PLATE, ETC., ANNEALED	70-85†	25-45†	.....	.....	26	35-50†
NICKEL, CAST	50-65	15-30	.....	.....	21.5	15-30
NICKEL, SILVER, ANNEALED	49-63†	18-30†	.....	.....	17-18	35-60†
STEEL, CAST CARBON, CLASS 70,000 NORMALIZED	70	38	.....	.....	30	28
STEEL, CAST LOW ALLOY, CLASS 100,000, NORMALIZE & TEMPERED	100	68	.....	.....	29-30	20
STEEL, CAST LOW ALLOY, CLASS 120,000, QUENCHED AND TEMPERED	120	95	.....	.....	29-30	16
STEEL, CAST LOW ALLOY, CLASS 200,000, QUENCHED AND TEMPERED	200	170	.....	.....	29-30	5
STEEL, SHEETS	48	25	.....	.....	29-30	18-27
STEEL, STAINLESS, AUSTENITIC, TYPES 304, 316	85	35	.....	.....	28	55-60
STEEL, STAINLESS, MARTENSITIC, TYPE 416	75	40	.....	.....	29	30
STEEL, STRUCTURAL, BRIDGE AND BUILDING, ASTM A7	60-72	33	33▲	45-54	29-30	21
STEEL, STRUCTURAL, HIGH STRENGTH, LOW ALLOY, ASTM A242	63-72	42-50	42-50▲	47-53	29-30	18-24
ZINC, DIE CAST ALLOY, XXIII	41	.....	60▲	31	.....	10

† When hardened, strength values are higher, elongation less.
▲ Compression yield point.

Hardness Conversion Chart

Brinell, Rockwell, and Scleroscope Hardness Numbers with Corresponding Tensile Strength

Brinell 10 MM Ball 3000 Kg.	Rockwell "C" 120 Cone 150 Kg.	Scleroscope Shore Model C	Tensile Strength 1000 Pound Per Square Inch
745	68	100	368
712	66	95	352
682	64	91	337
653	62	87	324
627	60	84	311
601	58	81	298
578	57	78	287
555	55	75	276
534	53	72	266
514	52	70	256
495	50	67	247
477	49	65	238
461	47	63	229
444	46	61	220
429	45	59	212
415	44	57	204
401	42	55	196
388	41	54	189
375	40	52	182
362	38	51	176
351	37	49	170
341	36	48	165
331	35	46	160
321	34	45	155
311	33	44	150
302	32	43	146
293	31	42	142
285	30	40	138
277	29	39	134
269	28	38	131
262	26	37	128
255	25	37	125
248	24	36	122
241	23	35	119
235	22	34	116
229	21	33	113
223	20	32	110
	Rockwell "B" 1/16" Ball 100 Kg.		
217	97	31	107
212	96	31	104
207	95	30	101
202	94	30	99
197	93	29	97
192	92	28	95
187	91	28	93
183	90	27	91
179	89	27	89
174	88	26	87

Decimal Equivalent Table

Decimal and Millimeter Equivalents of Fractions

Inches Fractions	Decimals	Millimeters	Inches Fractions	Decimals	Millimeters	Inches Fractions	Decimals	Millimeters
1/64	.015625	.397	11/32	.34375	8.731	1 1/16	.6875	17.463
1/32	.03125	.794	23/64	.359375	9.128	45/64	.703125	17.859
3/64	.406875	1.191	3/8	.375	9.525	23/32	.71875	18.256
1/16	.0625	1.588	25/64	.390625	9.922	47/64	.734375	18.653
5/64	.078125	1.984	13/32	.40625	10.319	3/4	.750	19.050
3/32	.09375	2.381	27/64	.421875	10.716	49/64	.765625	19.447
7/64	.109375	2.778	7/16	.4375	11.113	25/32	.78125	19.844
1/8	.125	3.175	29/64	.453125	11.509	51/64	.796875	20.241
9/64	.140625	3.572	15/32	.46875	11.906	13/16	.8125	20.638
5/32	.15625	3.969	31/64	.484375	12.303	53/64	.828125	21.034
11/64	.171875	4.366	1/2	.500	12.700	27/32	.84375	21.431
3/16	.1875	4.763	33/64	.515625	13.097	55/64	.859375	21.828
13/64	.203125	5.159	17/32	.53125	13.494	7/8	.875	22.225
7/32	.21875	5.556	35/64	.546875	13.891	57/64	.890625	22.622
15/64	.234375	5.953	9/16	.5625	14.288	29/32	.90625	23.019
1/4	.250	6.350	37/64	.578125	14.684	59/64	.921875	23.416
17/64	.265625	6.747	19/32	.59375	15.081	15/16	.9375	23.813
9/32	.28125	7.144	39/64	.609375	15.478	61/64	.953125	24.209
19/64	.296875	7.541	5/8	.625	15.875	31/32	.96875	24.606
5/16	.3125	7.938	41/64	.640625	16.272	63/64	.984375	25.003
21/64	.328125	8.334	21/32	.65625	16.669	1	1.000	25.400
			43/64	.671875	17.066			

Decimal Equivalents of Millimeters

MM	Inches	MM	Inches	MM	Inches	MM	Inches	MM	Inches	MM	Inches	MM	Inches	MM	Inches
0.1	.00394	9.5	0.37401	22.5	0.88582	35.5	1.39763	48.5	1.90944	61.5	2.42125	74.5	2.93306	87.5	3.44487
0.2	.00787	10.0	0.39370	23.0	0.90551	36.0	1.41732	49.0	1.92913	62.0	2.44094	75.0	2.95275	88.0	3.46456
0.3	.01181	10.5	0.41338	23.5	0.92519	36.5	1.43700	49.5	1.94881	62.5	2.46062	75.5	2.97243	88.5	3.48424
0.4	.01575	11.0	0.43307	24.0	0.94488	37.0	1.45669	50.0	1.96850	63.0	2.48031	76.0	2.99212	89.0	3.50393
0.5	.01968	11.5	0.45275	24.5	0.96456	37.5	1.47637	50.5	1.98818	63.5	2.49999	76.5	3.01180	89.5	3.52361
0.6	.02362	12.0	0.47244	25.0	0.98425	38.0	1.49606	51.0	2.00787	64.0	2.51968	77.0	3.03149	90.0	3.54330
0.7	.02756	12.5	0.49212	25.5	1.00393	38.5	1.51574	51.5	2.02755	64.5	2.53936	77.5	3.05117	90.5	3.56298
0.8	.03149	13.0	0.51181	26.0	1.02362	39.0	1.53543	52.0	2.04724	65.0	2.55905	78.0	3.07086	91.0	3.58267
0.9	.03543	13.5	0.53149	26.5	1.04330	39.5	1.55511	52.5	2.06692	65.5	2.57873	78.5	3.09054	91.5	3.60235
1.0	.03937	14.0	0.55118	27.0	1.06299	40.0	1.57480	53.0	2.08661	66.0	2.59842	79.0	3.11023	92.0	3.62204
1.5	.05905	14.5	0.57086	27.5	1.08267	40.5	1.59488	53.5	2.10629	66.5	2.61810	79.5	3.12991	92.5	3.64172
2.0	.07874	15.0	0.59055	28.0	1.10236	41.0	1.61417	54.0	2.12598	67.0	2.63779	80.0	3.14960	93.0	3.66141
2.5	.09842	15.5	0.61023	28.5	1.12204	41.5	1.63385	54.5	2.14566	67.5	2.65747	80.5	3.16928	93.5	3.68109
3.0	.11811	16.0	0.62992	29.0	1.14173	42.0	1.65354	55.0	2.16535	68.0	2.67716	81.0	3.18897	94.0	3.70078
3.5	.13779	16.5	0.64960	29.5	1.16141	42.5	1.67322	55.5	2.18503	68.5	2.69684	81.5	3.20865	94.5	3.72046
4.0	.15748	17.0	0.66929	30.0	1.18110	43.0	1.69291	56.0	2.20472	69.0	2.71653	82.0	3.22834	95.0	3.74015
4.5	.17716	17.5	0.68897	30.5	1.20078	43.5	1.71259	56.5	2.22440	69.5	2.73621	82.5	3.24802	95.5	3.75983
5.0	.19685	18.0	0.70866	31.0	1.22047	44.0	1.73228	57.0	2.24409	70.0	2.75590	83.0	3.26771	96.0	3.77952
5.5	.21653	18.5	0.72834	31.5	1.24015	44.5	1.75196	57.5	2.26377	70.5	2.77558	83.5	3.28739	96.5	3.79920
6.0	.23622	19.0	0.74803	32.0	1.25984	45.0	1.77165	58.0	2.28346	71.0	2.79527	84.0	3.30708	97.0	3.81889
6.5	.25590	19.5	0.76771	32.5	1.27952	45.5	1.79133	58.5	2.30314	71.5	2.81495	84.5	3.32676	97.5	3.83857
7.0	.27559	20.0	0.78740	33.0	1.29921	46.0	1.81102	59.0	2.32283	72.0	2.83464	85.0	3.34645	98.0	3.85826
7.5	.29527	20.5	0.80708	33.5	1.31889	46.5	1.83070	59.5	2.34251	72.5	2.85432	85.5	3.36613	98.5	3.87794
8.0	.31496	21.0	0.82677	34.0	1.33858	47.0	1.85039	60.0	2.36220	73.0	2.87401	86.0	3.38682	99.0	3.89763
8.5	.34464	21.5	0.84645	34.5	1.35826	47.5	1.87007	60.5	2.38188	73.5	2.89369	86.5	3.40550	99.5	3.91731
9.0	.35433	22.0	0.86614	35.0	1.37795	48.0	1.88976	61.0	2.40157	74.0	2.91338	87.0	3.42519	100.0	3.93700

English Metric System Equivalents

Length Equivalents

Unit	Millimeters	Centimeters	Inches	Feet	Yards	Meters
1 MILLIMETER =	1	.1	.03937	.003281	.001094	.001
1 CENTIMETER =	10	1	.3937	.032808	.010936	.01
1 INCH =	25.4001	2.54001	1	.083333	.027778	.025400
1 FOOT =	304.801	30.4801	12	1	.333333	.304801
1 YARD =	914.402	91.4402	36	3	1	.914402
1 METER =	1000	100	39.37	3.28083	1.09361	1

Unit	Feet	Yards	Meters	Rods	Furlongs	Miles (Statute)
1 ROD =	16.5	5.5	5.02921	1	.025 (1/40)	.003125 (1/320)
1 FURLONG =	660	220	201.168	40	1	.125 (1/8)
1 KILOMETER =	3280.8	1093.6	1000	199	4.971	.62137
1 MILE (STATUTE) =	5280	1760	1609.35	320	8	1

1 NAUTICAL MILE = 6080.2 FEET = 1.15155 STATUTE MILES = ⅓ LEAGUE.
1 LIGHT YEAR = 5.879 TRILLION MILES = 9.46 TRILLION KILOMETERS.

Weight Equivalents

Unit	Grains	Grams	Ounces (Troy)	Ounces (Avoir.)	Pounds (Troy)	Pounds (Avoir.)	Kilograms
1 GRAIN =	1	.064799	.002083	.002286	.000174	.000143	.000065
1 GRAM =	15.4324	1	.032151	.035274	.002679	.002205	.001
1 OUNCE (TROY) =	480	31.1035	1	1.09714	.083333	.068571	.031104
1 OUNCE (AVOIR.) =	437.5	28.3495	.911458	1	.075955	.0625	.028350
1 POUND (TROY) =	5760	373.242	12	13.1657	1	.822857	.373242
1 POUND (AVOIR.) =	7000	453.592	14.5833	16	1.21528	1	.453592
1 KILOGRAM =	15432.4	1000	32.1507	35.2740	2.67923	2.20462	1

Unit	Kilograms	Pounds (Troy)	Pounds (Avoir.)	Metric Tons	Net (Short) Tons	Gross (Long) Tons
1 METRIC TON =	1000	2679.23	2204.62	1	1.10231	.984206
1 NET (SHORT) TON =	907.185	2430.56	2000	.907185	1	.892857
1 GROSS (LONG) TON =	1016.05	2722.22	2240	1.01605	1.12	1

Volume and Capacity Equivalents

Unit	Cubic Centimeters	Cubic Inches	Liters	Quarts (Liquid)	Quarts (Dry)	Gallons (Liquid)	Gallons (Dry)	Cubic Feet
1 CU. CENTIMETER =	1	.06102	.001	.00106	.00091	.00026	.00023	.00004
1 CU. INCH =	16.387	1	.01639	.01732	.01488	.00433	.00372	.00058
1 GILL =	118.29	7.2188	.11829	.125	.10742	.03125	.02686	.00418
1 PINT (LIQUID) =	473.18	28.875	.47318	.5	.42968	.125	.10742	.01671
1 PINT (DRY) =	550.62	33.600	.55062	.58182	.5	.14546	.125	.01945
1 LITER =	1000	61.023	1	1.0567	.90808	.26417	.22702	.03531
1 QUART (LIQUID) =	946.36	57.75	.94636	1	.85937	.25	.21484	.03342
1 QUART (DRY) =	1101.2	67.201	1.1012	1.1637	1	.29091	.25	.03889
1 GALLON (LIQUID) =	3785.4	231	3.7854	4	3.4375	1	.85937	.13368
1 GALLON (DRY) =	4404.9	268.80	4.4049	4.6546	4	1.1636	1	.15556
1 PECK =	8809.8	537.61	8.8098	9.3092	8	2.3273	2	.31111
1 CU. FOOT =	28317.0	1728	28.317	29.922	25.714	7.4805	6.4285	1
1 BUSHEL =	35239.3	2150.4	35.239	37.237	32	9.3092	8	1.2445
1 BARREL =	119241.2	7276.5	119.24	126	108.28	31.5	27.070	4.2109
1 CU. YARD =	764559.4	46656	764.56	807.90	694.28	201.97	173.57	27
1 CU. METER =	1000000	61023.4	1000	1056.7	908.08	264.17	227.02	35.314

English Metric System Equivalents

Area Equivalents

Unit	Square Inches	Square Feet	Square Yards	Square Meters
1 SQUARE FOOT =	144	1	.1111	.09290
1 SQUARE YARD =	1296	9	1	.83613
1 SQUARE METER =	1550	10.7639	1.19599	1
1 SQUARE ROD =	39204	272.25	30.25	25.293
1 ARE =	155000	1076.39	119.599	100
1 ACRE =	6272640	43560	4840	4046.86
1 SQUARE MILE (640 ACRES) =	–	27878400	3097600	2589999
1 SQUARE KILOMETER =	–	10763867	1195985	1000000

Power Equivalents

Unit	BTU/Hour	Foot-Pound/Hour	Foot-Pound/Minute	HP	HP (Metric)	Watt	Kilowatt
1 BTU/HR. =	1	778.1688	12.96948	.000393	.000398	.293071	.000293
1 FT.LB./HR. =	.001285	1	–	5.05×10^{-7}	5.12×10^{-7}	.0003766	3.766×10^{-7}
1 FT.LB./MIN. =	.077104	–	1	3.0303×10^{-5}	3.072×10^{-7}	.022597	2.26×10^{-5}
1 HP =	2544.43	1980000	33000	1	1.01387	745.699	.7457
1 HP MET. =	2509.622	1952914	32548.56	.986320	1	735.499	.735499
1 WATT =	3.41214	2655.224	44.2537	.0013410	.0013596	1	.001

NOTE: Foot-Pounds indicates energy.
Pound-Feet indicates torque (Page M-2).

Metric System

Length

1 meter (m) = 10 decimeters(dm), 100 centimeters(cm), 1,000 millimeters(mm)
1 dekameter (dkm) = 10 meters (m)
1 hectometer (hm) = 100 meters (m)
1 kilometer (km) = 1,000 meters (m)

Weight

1 gram (g) = 10 decigrams (dg), 100 centigrams (cg), 1,000 milligrams (mg)
1 dekagram (dkg) = 10 grams (g)
1 hectogram (hg) = 100 grams (g)
1 kilogram (kg) = 1000 grams (g)
1 metric ton = 1000 kilograms (kg), 1,000,000 grams (g)

Volume & Capacity

1 liter (l) = 1 cubic decimeter(dm^3), 10 deciliters (dl), 100 centiliters(cl), 1,000 milliliters (ml), 1,000 cubic centimeters (cm^3or cc)
1 dekaliter (dkl) = 10 liters (l)
1 hectoliter (hl) = 100 liters (l)
1 kiloliter (kl) = 1 cubic meter (m^3), 1 stere (s), 1,000 liters (l)

Area

1 centare (ca) = 1 square meter (m^2), 100 square decimeters (dm^2), 10,000 square centameters (cm^2), 1,000,000 square millimeters (mm^2)
1 are (a) = 1 square dekameter (dkm^2), 100 square meters (m^2)
1 hectare (ha) = 100 ares (a), 10,000 square meters (m^2)
1 square kilometer (km^2) = 1,000,000 square meters (m^2)

Other prefixes commonly used:

micro — one millionth
deca — 10 times (same as deka)
myria — 10,000 times
mega — 1,000,000 times

Engineering Formulas and Constants

Circle
Area = Square of Diameter × .7854
or square of Radius × 3.1416
Circumference = Diameter × 3.1416
Diameter = Circumference × .3183

Doubling diameter increases area four times; tripling diameter increases area nine times, etc.

Square
Area = Square of Side
Diagonal = Side × 1.4142
Side = Diagonal × .7071

Square Inscribed in Circle
Side of Square = Diameter of Circle × .7071
or Circumference of Circle × .2251
Diameter of Circle = Side of Square × 1.4142
Circumference of Circle = Side of Square × 4.4429

Square and Circle with Equal Area
Side of Square = Diameter of Circle × .8862
Diameter of Circle = Side of Square × 1.128
Circumference of Circle = Side of Square × 3.545

Rectangle
Area = Length × Width
Diagonal = Square root of sum of squares of Width and Length

Triangle
Area = Base × ½ of Perpendicular Height

Sphere
Area of Surface = Square of Diameter × 3.1416
Volume = Cube of Diameter × .5236

Cube
Area of Surface = Square of Side × 6
Volume = Cube of Side
Diagonal = Side × 1.732

Cylinder
Area of Curved Surface = Diameter × Length × 3.1416
Volume = Square of Diameter × Length × .7854

Cone
Area of Curved Surface = Diameter of Base × Slant Height × 1.5708
Volume = Diameter of Base Squared × Perpindicular Height × .2618 or Area of Base × ⅓ Perpendicular Height

---

1 HP = 33,000 Foot-pounds of work per minute.
1 BTU = Heat required to raise 1 pound of water °F.
1 Kilowatt Hour = 3415 BTU
1 Radian = 57.296 degrees.
1 Register Ton = 100 cubic feet
1 U.S. Shipping Ton = 40 cubic feet
1 British Shipping Ton = 42 cubic feet
1 Cubic Foot/Minute = 471.9474 cubic cm/second
1 Cubic Foot/Minute = .1246753 gallons (U.S.)/second
1 Cubic Foot/Second = 2.2222 cubic yards/minute
1 Gallon (U.S.)/Minute = 8.020834 cubic feet/hour
1 Gallon (U.S.)/Minute = 3.785412 liter/minute
1 Liter/Minute = 2.118880 cubic feet/hour
1 Cubic Mitre/Minute = 264.1720 Gallons (U.S.)/Minute
1 Pound/Gallon (U.S.) = 7.480519 pound/cubic feet
1 Mile/Hour = 88 feet/minute
1 Foot/Minute = .01136364 miles/hour

1 Pound per Square Inch Pressure (PSI) = 144 pounds/square foot = 2.3095 feet fresh water at 62°F = 2.0355 inches mercury at 32°F = 2.0416 inches mercury at 62°F = .068 atmospheres.
Water Pressure (pounds per square inch) = .433 × height of water in feet (Fresh water at 62°F).
Weight of 1 cubic foot of fresh water = 62.355 pounds at 62°F = 59.76 pounds at 212°F.
Weight of 1 gallon (U.S.) water = 8.34 pounds
Weight of 1 cubic foot of Air at 14.7 lbs per square inch Pressure = .07608 pounds at 62°F = .08703 pounds at 32°F.
Watts = Amperes × Volts
1 Watt-Hour = 3.41214 BTU = 859.845 Calorie = 3600 Joule.
g = Acceleration due to gravity at Sea Level, Latitude 45° = 32.1726 Feet/Second squared.
1 pound-foot (torque) = 1.355818 Newton-Metre.

i-20

Area/Circumference Table

Circumferences and Areas of Circles (1 — 31⅞ Diameters)

Diameter	Circumference	Area	Diameter	Circumference	Area	Diameter	Circumference	Area	Diameter	Circumference	Area
1	3.1416	0.7854	5½	17.2788	23.758	14	43.9823	153.94	23	72.2566	415.48
1 1/16	3.3379	0.8866	5 9/16	17.4751	24.301	14⅛	44.3750	156.70	23⅛	72.6493	420.00
1⅛	3.5343	0.9940	5⅝	17.6715	24.850	14¼	44.7677	159.48	23¼	73.0420	424.56
1 3/16	3.7306	1.1075	5 11/16	17.8678	25.406	14⅜	45.1604	162.30	23⅜	73.4347	429.13
1¼	3.9270	1.2272	5¾	18.0642	25.967	14½	45.5531	165.13	23½	73.8274	433.74
1 5/16	4.1233	1.3530	5 13/16	18.2605	26.535	14⅝	45.9458	167.99	23⅝	74.2201	438.36
1⅜	4.3197	1.4849	5⅞	18.4569	27.100	14¾	46.3385	170.87	23¾	74.6128	443.01
1 7/16	4.5160	1.6230	5 15/16	18.6532	27.688	14⅞	46.7312	173.78	23⅞	75.0055	447.69
1½	4.7124	1.7671	6	18.8496	28.274	15	47.1239	176.71	24	75.3982	452.39
1 9/16	4.9087	1.9175	6⅛	19.2423	29.465	15⅛	47.5166	179.67	24⅛	75.7909	457.11
1⅝	5.1051	2.0739	6¼	19.6350	30.680	15¼	47.9093	182.65	24¼	76.1836	461.86
1 11/16	5.3014	2.2365	6⅜	20.0277	31.919	15⅜	48.3020	185.66	24⅜	76.5763	466.64
1¾	5.4978	2.4053	6½	20.4204	33.183	15½	48.6947	188.69	24½	76.9690	471.44
1 13/16	5.6941	2.5802	6⅝	20.8131	34.472	15⅝	49.0874	191.75	24⅝	77.3617	476.26
1⅞	5.8905	2.7612	6¾	21.2058	35.785	15¾	49.4801	194.83	24¾	77.7544	481.11
1 15/16	6.0868	2.9483	6⅞	21.5984	37.122	15⅞	49.8728	197.93	24⅞	78.1471	485.98
2	6.2832	3.1416	7	21.9911	38.485	16	50.2655	201.06	25	78.5398	490.87
2 1/16	6.4795	3.3410	7⅛	22.3838	39.871	16⅛	50.6582	204.22	25⅛	78.9325	495.79
2⅛	6.6759	3.5466	7¼	22.7765	41.282	16¼	51.0509	207.39	25¼	79.3252	500.74
2 3/16	6.8722	3.7583	7⅜	23.1692	42.718	16⅜	51.4436	210.60	25⅜	79.7179	505.71
2¼	7.0686	3.9761	7½	23.5619	44.179	16½	51.8363	213.82	25½	80.1106	510.71
2 5/16	7.2649	4.2000	7⅝	23.9546	45.664	16⅝	52.2290	217.08	25⅝	80.5033	515.72
2⅜	7.4613	4.4301	7¾	24.3473	47.173	16¾	52.6217	220.35	25¾	80.9060	520.77
2 7/16	7.6576	4.6664	7⅞	24.7400	48.707	16⅞	53.0144	223.65	25⅞	81.2887	525.84
2½	7.8540	4.9087	8	25.1327	50.265	17	53.4071	226.98	26	81.6814	530.93
2 9/16	8.0503	5.1572	8⅛	25.5254	51.849	17⅛	53.7998	230.33	26⅛	82.0741	536.05
2⅝	8.2467	5.4119	8¼	25.9181	53.456	17¼	54.1925	233.71	26¼	82.4668	541.19
2 11/16	8.4430	5.6727	8⅜	26.3108	55.088	17⅜	54.5852	237.10	26⅜	82.8595	546.35
2¾	8.6394	5.9396	8½	26.7035	56.745	17½	54.9779	240.53	26½	83.2522	551.55
2 13/16	8.8357	6.2126	8⅝	27.0962	58.426	17⅝	55.3706	243.98	26⅝	83.6449	556.76
2⅞	9.0321	6.4918	8¾	27.4889	60.132	17¾	55.7633	247.45	26¾	84.0376	562.00
2 15/16	9.2284	6.7771	8⅞	27.8816	61.862	17⅞	56.1560	250.95	26⅞	84.4303	567.27
3	9.4248	7.0686	9	28.2743	63.617	18	56.5487	254.47	27	84.8230	572.56
3 1/16	9.6211	7.3662	9⅛	28.6670	65.397	18⅛	56.9414	258.02	27⅛	85.2157	577.87
3⅛	9.8175	7.6699	9¼	29.0597	67.201	18¼	57.3341	261.59	27¼	85.6084	583.21
3 3/16	10.0138	7.9798	9⅜	29.4524	69.029	18⅜	57.7268	265.18	27⅜	86.0011	588.57
3¼	10.2102	8.2958	9½	29.8451	70.882	18½	58.1195	268.80	27½	86.3938	593.96
3 5/16	10.4065	8.6179	9⅝	30.2378	72.760	18⅝	58.5122	272.45	27⅝	86.7865	599.37
3⅜	10.6029	8.9462	9¾	30.6305	74.662	18¾	58.9049	276.12	27¾	87.1792	604.81
3 7/16	10.7992	9.2806	9⅞	31.0232	76.589	18⅞	59.2976	279.81	27⅞	87.5719	610.27
3½	10.9956	9.6211	10	31.4159	78.540	19	59.6903	283.53	28	87.965	615.75
3 9/16	11.1919	9.9678	10⅛	31.8086	80.516	19⅛	60.0830	287.27	28⅛	88.357	621.26
3⅝	11.3883	10.321	10¼	32.2013	82.516	19¼	60.4757	291.04	28¼	88.750	626.80
3 11/16	11.5846	10.680	10⅜	32.5940	84.541	19⅜	60.8684	294.83	28⅜	89.143	632.36
3¾	11.7810	11.045	10½	32.9867	86.590	19½	61.2611	298.65	28½	89.535	637.94
3 13/16	11.9773	11.416	10⅝	33.3794	88.664	19⅝	61.6538	302.49	28⅝	89.928	643.55
3⅞	12.1737	11.793	10¾	33.7721	90.763	19¾	62.0465	306.35	28¾	90.321	649.18
3 15/16	12.3700	12.177	10⅞	34.1648	92.886	19⅞	62.4392	310.24	28⅞	90.713	654.84
4	12.5664	12.566	11	34.5575	95.033	20	62.8319	314.16	29	91.106	660.52
4 1/16	12.7627	12.962	11⅛	34.9502	97.205	20⅛	63.2246	318.10	29⅛	91.499	666.23
4⅛	12.9591	13.364	11¼	35.3429	99.402	20¼	63.6173	322.06	29¼	91.892	671.96
4 3/16	13.1554	13.772	11⅜	35.7356	101.62	20⅜	64.0100	326.05	29⅜	92.284	677.71
4¼	13.3518	14.185	11½	36.1283	103.87	20½	64.4026	330.06	29½	92.677	683.49
4 5/16	13.5481	14.607	11⅝	36.5210	106.14	20⅝	64.7953	334.10	29⅝	93.070	689.30
4⅜	13.7445	15.033	11¾	36.9137	108.43	20¾	65.1880	338.16	29¾	93.462	695.13
4 7/16	13.9408	15.466	11⅞	37.3064	110.75	20⅞	65.5807	342.25	29⅞	93.855	700.98
4½	14.1372	15.904	12	37.6991	113.10	21	65.9734	346.36	30	94.248	706.86
4 9/16	14.3335	16.349	12⅛	38.0918	115.47	21⅛	66.3661	350.50	30⅛	94.640	712.70
4⅝	14.5299	16.800	12¼	38.4845	117.86	21¼	66.7588	354.66	30¼	95.033	718.69
4 11/16	14.7262	17.257	12⅜	38.8772	120.28	21⅜	67.1515	358.84	30⅜	95.426	724.64
4¾	14.9226	17.721	12½	39.2699	122.72	21½	67.5442	363.05	30½	95.819	730.62
4 13/16	15.1189	18.190	12⅝	39.6626	125.19	21⅝	67.9369	367.28	30⅝	96.211	736.62
4⅞	15.3153	18.665	12¾	40.0553	127.68	21¾	68.3296	371.54	30¾	96.604	742.64
4 15/16	15.5116	19.147	12⅞	40.4480	130.19	21⅞	68.7223	375.83	30⅞	96.997	748.69
5	15.7080	19.635	13	40.8407	132.73	22	69.1150	380.13	31	97.389	754.77
5 1/16	15.9043	20.129	13⅛	41.2334	135.30	22⅛	69.5077	384.46	31⅛	97.782	760.87
5⅛	16.1007	20.629	13¼	41.6261	137.89	22¼	69.9004	388.82	31¼	98.175	766.99
5 3/16	16.2970	21.135	13⅜	42.0188	140.50	22⅜	70.2931	393.20	31⅜	98.567	773.14
5¼	16.4934	21.648	13½	42.4115	143.14	22½	70.6858	397.61	31½	98.960	779.31
5 5/16	16.6897	22.166	13⅝	42.8042	145.80	22⅝	71.0785	402.04	31⅝	99.353	785.51
5⅜	16.8861	22.691	13¾	43.1969	148.49	22¾	71.4712	406.49	31¾	99.746	791.73
5 7/16	17.0824	23.221	13⅞	43.5896	151.20	22⅞	71.8639	410.97	31⅞	100.138	797.98

Trigonometric Functions

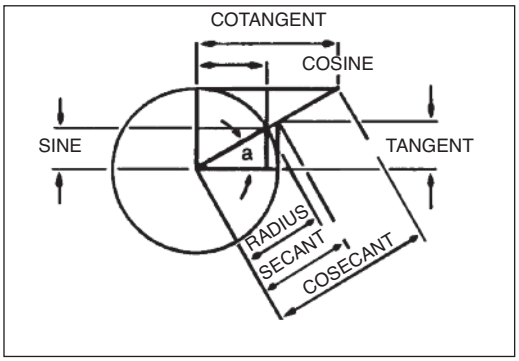

Trigonometric Formulas

(See pages that follow for functions)

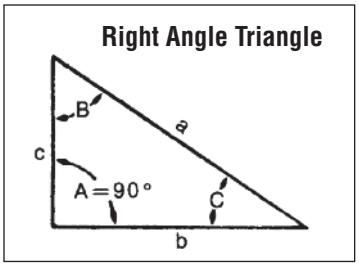

Formulas for Finding Functions of Angles

$\frac{\text{Side Opposite}}{\text{Hypotenuse}}$ = Sine

$\frac{\text{Side Adjacent}}{\text{Hypotenuse}}$ = Cosine

$\frac{\text{Side Opposite}}{\text{Side Adjacent}}$ = Tangent

$\frac{\text{Side Adjacent}}{\text{Side Opposite}}$ = Cotangent

$\frac{\text{Hypotenuse}}{\text{Side Adjacent}}$ = Secant

$\frac{\text{Hypotenuse}}{\text{Side Opposite}}$ = Cosecant

Formulas for Finding Sides of Right Angle Triangles with an Angle and Side Known

To Find: Length of side opposite
- Hypotenuse × Sine
- Hypotenuse ÷ Cosecant
- Side Adjacent × Tangent
- Side Adjacent ÷ Cotangent

To Find: Length of side adjacent
- Hypotenuse × Cosine
- Hypotenuse ÷ Secant
- Side Opposite × Cotangent
- Side Opposite ÷ Tangent

To Find: Length of hypotenuse
- Side Opposite × Cosecant
- Side Opposite ÷ Sine
- Side Adjacent × Secant
- Side Adjacent ÷ Cosine

To Find Angles and Sides of Right Angle Triangles

To Find Angles		To Find Sides		
To Find:	Formulas	To Find:	Formulas	
C	$\frac{c}{a}$ = Sin. C	a	$\sqrt{b^2 + c^2}$	—
C	$\frac{b}{a}$ = Cos. C	a	c × Cosec. C	$\frac{c}{\text{Sin. C}}$
C	$\frac{c}{b}$ = Tan. C	a	c × Sec. B	$\frac{c}{\text{Cos. B}}$
C	$\frac{b}{c}$ = Cotan. C	a	b × Cosec. B	$\frac{b}{\text{Sin. B}}$
C	$\frac{a}{b}$ = Sec. C	a	b × Sec. C	$\frac{b}{\text{Cos. C}}$
C	$\frac{a}{c}$ = Cosec. C	b	$\sqrt{a^2 - c^2}$	—
B	$\frac{b}{a}$ = Sin. B	b	a × Sin. B	$\frac{a}{\text{Cosec. B}}$
B	$\frac{c}{a}$ = Cos. B	b	a × Cos. C	$\frac{a}{\text{Sec. C}}$
B	$\frac{b}{c}$ = Tan. B	b	c × Tan. B	$\frac{c}{\text{Cotan. B}}$
B	$\frac{c}{b}$ = Cotan. B	b	c × Cot. C	$\frac{c}{\text{Tan. C}}$
B	$\frac{a}{c}$ = Sec. B	c	$\sqrt{a^2 - b^2}$	—
B	$\frac{a}{b}$ = Cosec. B	c	a × Cos. B	$\frac{a}{\text{Sec. B}}$
		c	a × Sin. C	$\frac{a}{\text{Cosec. C}}$
		c	b × Cot. B	$\frac{b}{\text{Tan. B}}$
		c	b × Tan. C	$\frac{b}{\text{Cotan. C}}$

To Find Angles and Sides of Oblique Angle Triangles

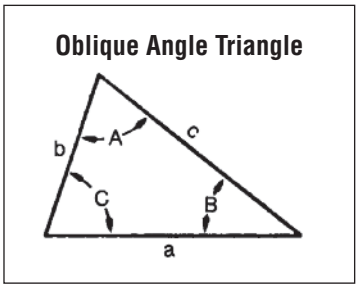

To Find	Known	Formulas	To Find	Known	Formulas
C	A, B	180° – (A +B)	A	B, C	180° – (B + C)
b	a, B, A	$\frac{a \times \text{Sin. B}}{\text{Sin. A}}$	Cos. A	a, b, c	$\frac{b^2 + c^2 - a^2}{2bc}$
c	a, A, C	$\frac{a \times \text{Sin. C}}{\text{Sin. A}}$	Sin. C	c, A, a	$\frac{c \times \text{Sin. A}}{a}$
Tan. A	a, C, b	$\frac{a \times \text{Sin. C}}{b - (a \times \text{Cos. C})}$	Cot. B	a, C, b	$\frac{a \times \text{Cosec. C}}{b}$ – Cot. C
B	A, C	180° – (A + C)	c	b, C, B	b × Sin. C × Cosec. B
Sin. B	b, A, a	$\frac{b \times \text{Sin. A}}{a}$	—	—	—

Trigonometric Functions

°	'	Sine	Tan.	Cotan.	Cosine	'	°	°	'	Sine	Tan.	Cotan.	Cosine	'	°
0	0	.000000	.000000	INFINITE	1.000000	0	90	11	0	.190809	.194380	5.1445540	.981627	0	79
	10	.002909	.002909	343.77371	.999996	50			10	.913664	.197401	5.0658352	.981068	50	
	20	.005818	.005818	171.88540	.999983	40			20	.196517	.200425	4.9894027	.980500	40	
	30	.008727	.008727	114.58865	.999962	30			30	.199368	.203452	4.9151570	.979925	30	
	40	.011635	.011636	85.939791	.999932	20			40	.202218	.206483	4.8430045	.979341	20	
	50	.014544	.014545	68.750087	.999894	10			50	.205065	.209518	4.7728568	.978748	10	
1	0	.017452	.017455	57.289962	.999848	0	89	12	0	.207912	.212557	4.7046301	.978148	0	78
	10	.020361	.020365	49.103881	.999793	50			10	.210756	.215599	4.6382457	.977539	50	
	20	.023269	.023275	42.964077	.999729	40			20	.213599	.218645	4.5736287	.976921	40	
	30	.026177	.026186	38.188459	.999657	30			30	.216440	.221695	4.5107085	.976296	30	
	40	.029085	.029097	34.367771	.999577	20			40	.219279	.224748	4.4494181	.975662	20	
	50	.031992	.032009	31.241577	.999488	10			50	.222116	.227806	4.3896940	.975020	10	
2	0	.034899	.034921	28.636253	.999391	0	88	13	0	.224951	.230868	4.3314759	.974370	0	77
	10	.037806	.037834	26.431600	.999285	50			10	.227784	.233934	4.2747066	.973712	50	
	20	.040713	.040747	24.541758	.999171	40			20	.230616	.237004	4.2193318	.973045	40	
	30	.043619	.043661	22.903766	.999048	30			30	.233445	.240079	4.1652998	.927370	30	
	40	.046525	.046576	21.470401	.998917	20			40	.236273	.243158	4.1125614	.971687	20	
	50	.049431	.049491	20.205553	.998778	10			50	.239098	.246241	4.0610700	.970995	10	
3	0	.052336	.052408	19.081137	.998630	0	87	14	0	.241922	.249328	4.0107809	.970296	0	76
	10	.055241	.055325	18.074977	.998473	50			10	.244743	.252420	3.9616518	.969588	50	
	20	.058145	.058243	17.169337	.998308	40			20	.247563	.255517	3.9136420	.968872	40	
	30	.061049	.061163	16.349855	.998135	30			30	.250380	.258618	3.8667131	.968148	30	
	40	.063952	.064083	15.604784	.997957	20			40	.253195	.261723	3.8208281	.967415	20	
	50	.066854	.067004	14.924417	.997763	10			50	.256008	.264834	3.7759519	.966675	10	
4	0	.069756	.069927	14.300666	.997564	0	86	15	0	.258819	.267949	3.7320508	.965926	0	75
	10	.072658	.072851	13.726738	.997357	50			10	.261628	.271069	3.6890927	.965169	50	
	20	.075559	.075776	13.196888	.997141	40			20	.264434	.274195	3.6470467	.964404	40	
	30	.078459	.078702	12.706205	.996917	30			30	.267238	.277325	3.6058835	.963630	30	
	40	.081359	.081629	12.250505	.996685	20			40	.270040	.280460	3.5655749	.962849	20	
	50	.084258	.084558	11.826167	.996444	10			50	.272840	.283600	3.5260938	.962059	10	
5	0	.087156	.087489	11.430052	.996195	0	85	16	0	.275637	.286745	3.4874144	.961262	0	74
	10	.090053	.090421	11.059431	.995937	50			10	.278432	.289896	3.4495120	.960456	50	
	20	.092950	.093354	10.711913	.995671	40			20	.281225	.293052	3.4123626	.959642	40	
	30	.095846	.096289	10.385397	.995396	30			30	.284015	.296214	3.3759434	.958820	30	
	40	.098741	.099226	10.078031	.995113	20			40	.286803	.299380	3.3402326	.957990	20	
	50	.101635	.102164	9.7881732	.994822	10			50	.289589	.302553	3.3052091	.957151	10	
6	0	.104528	.105104	9.5143645	.994522	0	84	17	0	.292372	.305731	3.2708526	.956305	0	73
	10	.107421	.108046	9.2553035	.994214	50			10	.295152	.308914	3.2371438	.955450	50	
	20	.110313	.110990	9.0098261	.993897	40			20	.297930	.312104	3.2040638	.954588	40	
	30	.113203	.113936	8.7768874	.993572	30			30	.300706	.315299	3.1715948	.953717	30	
	40	.116093	.116883	8.5555468	.993238	20			40	.303479	.318500	3.1397194	.952838	20	
	50	.118982	.119833	8.3449558	.922896	10			50	.306249	.321707	3.1084210	.951951	10	
7	0	.121869	.122785	8.1443464	.992546	0	83	18	0	.309017	.324920	3.0776835	.951057	0	72
	10	.124756	.125738	7.9530224	.992187	50			10	.311782	.328139	3.0474915	.950154	50	
	20	.127642	.128694	7.7703506	.991820	40			20	.314545	.331364	3.0178301	.949243	40	
	30	.130526	.131653	7.5957541	.991445	30			30	.317305	.334595	2.9886850	.948324	30	
	40	.133410	.134613	7.4287064	.991061	20			40	.320062	.337833	2.9600422	.947397	20	
	50	.136292	.137576	7.2687255	.990669	10			50	.322816	.341077	2.9318885	.946462	10	
8	0	.139173	.140541	7.1153697	.990268	0	82	19	0	.325568	.344328	2.9042109	.945519	0	71
	10	.142053	.143508	6.9682335	.989859	50			10	.328317	.347585	2.8769970	.944568	50	
	20	.144932	.146478	6.8269437	.989442	40			20	.331063	.350848	2.8502349	.943609	40	
	30	.147809	.149451	6.6911562	.959016	30			30	.333807	.354119	2.8239129	.942641	30	
	40	.150686	.152426	6.5605538	.988582	20			40	.336547	.357396	2.7980198	.941666	20	
	50	.153561	.155404	6.4348428	.988139	10			50	.339285	.360680	2.7725448	.940684	10	
9	0	.156434	.158384	6.3137515	.987688	0	81	20	0	.342020	.363970	2.7474774	.939693	0	70
	10	.159307	.161368	6.1970279	.987229	50			10	.344752	.367268	2.7228076	.938694	50	
	20	.162178	.164354	6.0844381	.986762	40			20	.347481	.370573	2.6985254	.937687	40	
	30	.165048	.167343	5.9757644	.986286	30			30	.350207	.373885	2.6746215	.936672	30	
	40	.167916	.170334	5.8708042	.985801	20			40	.352931	.377204	2.6510867	.935650	20	
	50	.170783	.173329	5.7693688	.985309	10			50	.355651	.380530	2.6279121	.934619	10	
10	0	.173648	.176327	5.6712818	.984808	0	80	21	0	.358368	.383864	2.6050891	.933580	0	69
	10	.176512	.179328	5.5763786	.984298	50			10	.361082	.387205	2.5826094	.932534	50	
	20	.179375	.182332	5.4845052	.983781	40			20	.363793	.390554	2.5604649	.931480	40	
	30	.182236	.185339	5.3955172	.983255	30			30	.366501	.393911	2.5386479	.930418	30	
	40	.185095	.188359	5.3092793	.982721	20			40	.369206	.397275	2.5171507	.929348	20	
	50	.187953	.191363	5.2256647	.982178	10	79		50	.371908	.400647	2.4959661	.928270	10	68
°	'	Cosine	Cotan.	Tan.	Sine	'	°	°	'	Cosine	Cotan.	Tan.	Sine	'	°

NOTE: For functions from 45°-0' to 68° read from bottom of table upward.

Trigonometric Tables

Trigonometric Functions

°	'	Sine	Tan.	Cotan.	Cosine	'	°	°	'	Sine	Tan.	Cotan.	Cosine	'	°
22	0	.374607	.404026	2.4750869	.927184	0	68	34	0	.559193	.674509	1.4825610	.829038	0	56
	10	.377302	.407414	2.4545061	.926090	50			10	.561602	.678749	1.4732983	.827407	50	
	20	.379994	.410810	2.4342172	.924980	40			20	.564007	.683007	1.4641147	.825770	40	
	30	.382683	.414214	2.4142136	.923880	30			30	.566406	.687281	1.4550090	.824126	30	
	40	.385369	.417626	2.3944889	.922762	20			40	.568801	.691573	1.4459801	.822475	20	
	50	.388052	.421046	2.3750372	.921638	10			50	.571191	.695881	1.4370268	.820817	10	
23	0	.390731	.424475	2.3558524	.920505	0	67	35	0	.573576	.700208	1.4281480	.819152	0	55
	10	.393407	.427912	2.3369287	.919364	50			10	.575957	.704552	1.4193427	.817480	50	
	20	.396080	.431358	2.3182606	.918216	40			20	.578332	.708913	1.4106098	.815801	40	
	30	.398749	.434812	2.2998425	.917060	30			30	.580703	.713293	1.4019483	.814116	30	
	40	.401415	.438276	2.2816693	.915896	20			40	.583069	.717691	1.3933571	.812423	20	
	50	.404078	.441748	2.2637357	.914725	10			50	.585429	.722108	1.3848355	.810723	10	
24	0	.406737	.445229	2.2460368	.913545	0	66	36	0	.587785	.726543	1.3763810	.809017	0	54
	10	.409392	.448719	2.2285676	.912358	50			10	.590136	.730996	1.3679959	.807304	50	
	20	.412045	.452218	2.2113234	.911164	40			20	.592482	.735469	1.3596764	.805584	40	
	30	.414693	.455726	2.1942997	.909961	30			30	.594823	.739961	1.3514224	.803857	30	
	40	.417338	.459244	2.1774920	.908751	20			40	.597159	.744472	1.3432331	.802123	20	
	50	.419980	.462771	2.1608958	.907533	10			50	.599489	.749003	1.3351075	.800383	10	
25	0	.422618	.466308	2.1445069	.906308	0	65	37	0	.601815	.753554	1.3270448	.798636	0	53
	10	.425253	.469854	2.1283213	.905075	50			10	.604136	.758125	1.3190441	.796882	50	
	20	.427884	.473410	2.1123348	.903834	40			20	.606451	.762716	1.3111046	.795121	40	
	30	.430511	.476976	2.0965436	.902585	30			30	.608761	.767327	1.3032254	.793353	30	
	40	.433125	.480551	2.0809438	.901329	20			40	.611067	.771959	1.2954057	.791579	20	
	50	.435755	.484137	2.0655318	.900065	10			50	.613367	.776612	1.2876447	.789798	10	
26	0	.438371	.487733	2.0503038	.898794	0	64	38	0	.615661	.781286	1.2799416	.788011	0	52
	10	.440984	.491339	2.0352565	.897515	50			10	.617951	.785981	1.2722957	.786217	50	
	20	.443593	.494955	2.0203862	.896229	40			20	.620235	.790698	1.2647062	.784416	40	
	30	.446197	.498582	2.0056897	.894934	30			30	.622515	.795436	1.2571723	.782608	30	
	40	.448799	.502219	1.9911637	.893633	20			40	.624789	.800196	1.2496933	.780794	20	
	50	.451397	.505867	1.9768050	.892323	10			50	.627057	.804980	1.2422685	.778973	10	
27	0	.453990	.509525	1.9626105	.891007	0	63	39	0	.692320	.809784	1.2348972	.777146	0	51
	10	.456580	.513195	1.9485772	.889682	50			10	.631578	.814612	1.2275786	.775312	50	
	20	.459166	.516876	1.9347020	.888350	40			20	.633831	.819463	1.2203121	.773472	40	
	30	.461749	.520567	1.9209821	.887011	30			30	.636078	.824336	1.2130970	.771625	30	
	40	.464327	.524270	1.9074147	.885664	20			40	.638320	.829234	1.2059327	.769771	20	
	50	.466901	.527984	1.8939971	.884309	10			50	.640557	.834155	1.1988184	.767911	10	
28	0	.469472	.531709	1.8807265	.882948	0	62	40	0	.642788	.839100	1.1917536	.766044	0	50
	10	.472038	.535547	1.8676003	.881578	50			10	.645013	.844069	1.1847376	.764171	50	
	20	.474600	.539195	1.8546159	.880201	40			20	.647233	.849062	1.1777698	.762292	40	
	30	.477149	.542956	1.8417709	.878817	30			30	.649448	.854081	1.1708496	.760406	30	
	40	.479713	.546728	1.8290628	.877425	20			40	.651657	.859124	1.1639763	.758514	20	
	50	.482263	.550515	1.8164892	.876026	10			50	.653861	.864193	1.1571495	.756615	10	
29	0	.484810	.554309	1.8040478	.874620	0	61	41	0	.656059	.869287	1.1503684	.754710	0	49
	10	.487352	.558118	1.7917362	.873206	50			10	.658252	.874407	1.1436326	.752798	50	
	20	.489890	.561939	1.7795524	.871784	40			20	.660439	.879553	1.1369414	.750880	40	
	30	.492424	.565773	1.7674940	.870356	30			30	.662620	.884725	1.1302944	.748956	30	
	40	.494953	.569619	1.7555590	.868920	20			40	.664796	.889924	1.1236909	.747025	20	
	50	.497479	.573478	1.7437453	.867476	10			50	.666966	.895151	1.1171305	.745088	10	
30	0	.500000	.577350	1.7320508	.866025	0	60	42	0	.669131	.900404	1.1106125	.743145	0	48
	10	.502517	.581235	1.7204736	.864567	50			10	.671289	.905685	1.1041365	.741195	50	
	20	.505030	.585134	1.7090116	.863102	40			20	.673443	.910994	1.0977020	.739239	40	
	30	.507538	.589045	1.6976631	.861629	30			30	.675590	.916331	1.0913085	.737277	30	
	40	.510043	.592970	1.6864261	.860149	20			40	.677732	.921697	1.0849554	.735309	20	
	50	.512543	.596908	1.6752988	.858662	10			50	.679868	.927021	1.0786423	.733335	10	
31	0	.515038	.600861	1.6642795	.857167	0	59	43	0	.681998	.932515	1.0723687	.731354	0	47
	10	.517529	.604827	1.6533663	.855665	50			10	.684123	.937968	1.0661341	.729367	50	
	20	.520016	.608807	1.6425576	.854156	40			20	.686242	.943451	1.0599381	.727374	40	
	30	.522499	.612801	1.6318517	.852640	30			30	.688355	.948965	1.0537801	.725374	30	
	40	.524977	.616809	1.6212469	.851117	20			40	.690462	.954508	1.0476598	.723369	20	
	50	.527450	.620832	1.6107417	.849586	10			50	.692563	.960083	1.0415767	.721357	10	
32	0	.529919	.624869	1.6003345	.848048	0	58	44	0	.694658	.965689	1.0355303	.719340	0	46
	10	.532384	.628921	1.5900238	.846503	50			10	.696748	.971326	1.0295203	.717316	50	
	20	.534844	.632988	1.5798079	.844951	40			20	.698832	.976996	1.0235461	.715286	40	
	30	.537300	.637079	1.5696856	.843391	30			30	.700909	.982697	1.0176074	.713251	30	
	40	.539751	.641167	1.5596552	.841825	20			40	.702981	.988432	1.0117088	.711209	20	
	50	.542197	.645280	1.4597155	.840251	10			50	.705047	.994199	1.0058348	.709161	10	
33	0	.544639	.649408	1.5398650	.838671	0	57	45	0	.707107	1.000000	1.0000000	.707107	0	45
	10	.547076	.653551	1.5301025	.837083	50			—	—	—	—	—	—	
	20	.549509	.657710	1.5204261	.835488	40			—	—	—	—	—	—	
	30	.551937	.661886	1.5108352	.833886	30			—	—	—	—	—	—	
	40	.554360	.666077	1.5013282	.832277	20			—	—	—	—	—	—	
	50	.556769	.670285	1.4919039	.830661	10	56	—	—	—	—	—	—	—	
°	'	Cosine	Cotan.	Tan.	Sine	'	°	°	'	Cosine	Cotan.	Tan.	Sine	'	°

NOTE: For functions from 45°-0' to 68° read from bottom of table upward.

Conversion Tables

Given	Multiply By	To Find
ABAMPERE	10	AMPERE
ACRES	0.4046856	HECTARE
ACRES	43560	SQUARE FEET
ACRES	4046.8564	SQUARE METERS
ACRES	1.562×10^{-3}	SQUARE MILES
ARE	1076.391	SQUARE FEET
ATMOSPHERES	76	CMS. OF MERCURY
ATMOSPHERES	33.89854	FEET OF WATER
ATMOSPHERES	29.92	INCHES OF MERCURY
ATMOSPHERES	14.69595	POUNDS/SQUARE INCH
BAGS – CEMENT	94	POUNDS – CEMENT
BARRELS – OIL	5.614583	CUBIC FOOT
BARRELS – OIL	158.9873	LITER
BARRELS – OIL	42	GALLONS – OIL
BARRELS (US DRY)	3.281219	BUSHELS (US)
BARRELS (US DRY)	4.083333	CUBIC FEET
BARRELS (US DRY)	115.6271	LITER
BARRELS (US LIQ.)	4.2109375	CUBIC FEET
BARRELS (US LIQ.)	0.1192405	CUBIC METERS
BARRELS (US LIQ.)	26.22925	GALLONS (BRIT.)
BARRELS (US LIQ.)	31.5	GALLONS (US)
BARRELS – CEMENT	376	POUNDS – CEMENT
BTU	251.996	CALORIE
BTU	778.169	FOOT – POUNDS – FORCE
BTU	3.9302×10^{-4}	HORSEPOWER – HOURS
BTU	0.252	KILOGRAM – CALORIES
BTU	107.586	KILOGRAM – METERS
BTU	2.9307×10^{-4}	KILOWATT – HOURS
BTU	1055.056	JOULE
BTU/MIN.	12.96	FOOT – POUNDS/SEC.
BTU/MIN.	0.0235809	HORSEPOWER
BTU/MIN.	0.0175843	KILOWATTS
BTU/MIN.	17.5796	WATTS
BUSHELS (BRIT.)	1.032057	BUSHELS (US)
BUSHELS (BRIT.)	8	GALLONS (BRIT.)
BUSHELS (US)	0.3047647	BARRELS (US DRY)
BUSHELS (US)	1.244456	CUBIC FEET
BUSHELS (US)	9.309177	GALLONS (US LIQ.)
CALORIE	4.1868	JOULE
CALORIE	3.96832×10^{-3}	BTU
CALORIE	3.08803	FOOT – POUND – FORCE
CENTARES (CENTIARES)	1	SQUARE METERS
CENTIMETERS	0.3937008	INCHES
CENTIMETERS	.3937008	INCH
CENTIMETERS	0.01	METERS
CENTIMETERS	10	MILLIMETERS
CENTIMTRS. OF MERCURY	0.01316	ATMOSPHERES
CENTIMTRS. OF MERCURY	0.4461	FEET OF WATER
CENTIMTRS. OF MERCURY	136	KGS./SQUARE METER
CENTIMTRS. OF MERCURY	27.85	POUNDS/SQUARE FT.
CENTIMTRS. OF MERCURY	0.1934	POUNDS/SQUARE INCH
CENTIPOISE	0.001	PASCAL – SECOND
CHAIN (RAMSDEN'S)	100	FEET
CHAIN (GUNTER'S)	66	FEET
CORD	128	CUBIC FEET
CORD	3.624	STERE
COULOMB	1	AMPERE – SECOND
CUBIC CENTIMETER	0.06102	CUBIC INCHES
CUBIC CENTIMETER	0.001	LITER
CUBIC CENTIMETER	1	MILLILETER
CUBIC DECIMETER	0.0353	CUBIC FEET
CUBIC FEET	12	BOARD FEET
CUBIC FEET	0.803564	BUSHELS (US)
CUBIC FEET	1728	CUBIC INCHES
CUBIC FEET	0.0283168	CUBIC METERS
CUBIC FEET	28.317	CUBIC DECIMETERS
CUBIC FEET	0.037037	CUBIC YARD
CUBIC FEET	6.228835	GALLONS (BRIT.)
CUBIC FEET	7.480519	GALLONS (US)
CUBIC FEET	28.316847	LITERS
CUBIC FEET	25.71405	QUARTS (US DRY)
CUBIC FEET/HOUR	7.865791	CUBIC CM./SEC.
CUBIC FEET/HOUR	0.4719474	LITER/MIN.
CUBIC FEET/MIN.	0.1246753	GALLONS (US)/SEC.
CUBIC FEET/POUND	0.0624279	CUBIC METER/KILOGRAM
CUBIC METER	8.64849	BARREL (US DRY)
CUBIC METER	8.386414	BARREL (US LIQ.)
CUBIC METER	35.31467	CUBIC FEET
CUBIC METER	1.307951	CUBIC YARDS
CUBIC METER	264.1721	GALLONS (US)
CUBIC METER	1000	LITER
CUBIC YARDS	27	CUBIC FEET
CUBIC YARDS	0.7645548	CUBIC METER
CUBIC YARDS	201.974	GALLONS (US)
CUBIC YARDS/MIN.	0.45	CUBIC FEET/SEC.
CUBIC YARDS/MIN.	3.366234	GALLONS (US)/SEC.
CUBIT	18	INCH

Given	Multiply By	To Find
CUP	236.588	MILLILITER
CUP (METRIC)	200	MILLILITER
DEGREE	0.017453	RADIAN
DEGREE/SEC.	0.166667	REVOLUTION/MIN.
DENIER	0.11111(1/9)	TEX
DRACHM (BRIT. FLUID)	0.9607599	DRAM (U.S. FLUID)
DRAM (APOTH)	60	GRAINS
DRAM (AVOIR)	27.34375	GRAINS
DRAM (U.S. FLUID)	0.2255859	CUBIC INCHES
ELL	45	INCH
ERG	1×10^{-7}	JOULE
FATHOM	6	FEET
FEET OF WATER	0.0295	ATMOSPHERES
FEET OF WATER	0.8826	INCHES OF MERCURY
FEET OF WATER	304.8	KGS./SQUARE METER
FEET OF WATER	62.43	POUNDS/SQUARE FT.
FEET OF WATER	0.4335	POUNDS/SQUARE INCH
FEET/MIN.	0.508	CENTIMETERS/SEC.
FEET/MIN.	0.01667	FEET/SEC.
FEET/MIN.	0.01829	KILOMETERS/HOUR
FEET/MIN.	0.3048	METERS/MIN
FEET/MIN.	0.01136	MILES/HOUR
FEET/SEC.	30.48	CENTIMETERS/SEC.
FEET/SEC.	1.097	KILOMETERS/HOUR
FEET/SEC.	0.5921	KNOTS
FEET/SEC.	18.29	METERS/MIN.
FEET/SEC.	0.6818	MILES/HOUR
FEET/SEC.	0.01136	MILES/MIN.
FERKIN (US)	9	GALLONS (US) DRY
FOOT	30.48	CENTIMETER
FOOT	12	INCH
FOOT/MINUTE	0.3048	METER
FOOT/MINUTE	0.018288	KILOMETER/HOUR
FOOT/SECOND	0.01136364	MILE/HOUR
FOOT/SECOND	0.3048	METER/SECOND
FOOT – POUNDS – FORCE	0.6818182	MILE/HOUR
FOOT – POUNDS – FORCE	5.050×10^{-7}	HORSEPOWER – HOURS
FOOT – POUNDS – FORCE	1.35582	JOULES
FOOT – POUNDS – FORCE	3.241×10^{-4}	KILOGRAM – CALORIES
FOOT – POUNDS – FORCE	0.1383	KILOGRAM – METERS
FOOT – POUNDS – FORCE	$.766\times10^{-5}$	KILOWATT – HOURS
FOOT – POUNDS – FORCE	1.286×10^{-3}	BTU
FOOT – POUNDS/MIN.	1.286×10^{-3}	BTU/MIN.
FOOT – POUNDS/MIN.	0.01667	FOOT – POUNDS/SEC.
FOOT – POUNDS/MIN.	3.030×10^{-4}	HORSEPOWER
FOOT – POUNDS/MIN.	3.241×10^{-4}	KG. – CALORIES/MIN.
FOOT – POUNDS/MIN.	2.260×10^{-5}	KILOWATTS
FOOT – POUNDS/SEC.	7.717×10^{-2}	BTU/MIN.
FOOT – POUNDS/SEC.	1.818×10^{-3}	HORSEPOWER
FOOT – POUNDS/SEC.	1.945×10^{-2}	KG. – CALORIES/MIN.
FOOT – POUNDS/SEC.	1.355818	WATTS
FURLONG	660	FEET
FURLONG	10	CHAIN
GALLON (BRIT.)	9.632619	CUBIC FT./HOUR
GALLON (BRIT.)	0.2727654	CUBIC METER/HOUR
GALLONS (US)/MIN.	8.020834	CUBIC FEET/HOUR
GALLONS (US)/MIN.	0.2271247	CUBIC METER/HOUR
GALLON (DRY)	268.8025	CUBIC INCH
GALLONS (LIQ.)	3785.412	CUBIC CENTIMETERS
GALLONS (LIQ.)	0.1336805	CUBIC FEET
GALLONS (LIQ.)	231	CUBIC INCHES
GALLONS (LIQ.)	3.785×10^{-3}	CUBIC METERS
GALLONS (LIQ.)	4.951×10^{-3}	CUBIC YARDS
GALLONS (LIQ.)	0.8326742	GALLONS (BRIT.)
GALLONS (LIQ.)	3.785412	LITERS
GALLONS (LIQ.)	8	PINTS (LIQ.)
GALLONS (LIQ.)	4	QUARTS (LIQ.)
GALLONS WATER	8.3453	POUNDS OF WATER
GALLONS WATER/MIN.	6.0086	TONS WATER/24 HOURS
GALLONS – IMPERIAL	1.20095	U.S. GALLONS
GALLONS – U.S.	0.83267	IMPERIAL GALLONS
GALLONS (US)/MIN.	2.228×10^{-3}	CUBIC FEET/SEC.
GALLONS (US)/MIN.	8.020834	CUBIC FEET/HOUR
GALLONS (US)/MIN.	0.06308	Litros/SEC.
GILL	7.21875	CUBIC INCH
GILL	4	OUNCE (U.S.)
GILL (BRIT.)	1.20095	GILL (U.S.)
GRAINS (TROY)	0.0648	GRAMS
GRAINS/U.S. GAL.	17.118	PARTS/MILLION
GRAINS/U.S. GAL.	142.86	POUNDS/MILLION GAL.
GRAINS/U.S. GAL.	14.254	PARTS/MILLION
GRAMS	980.7	DYNES
GRAMS	15.432358	GRAINS
GRAMS	10^{-3}	KILOGRAMS
GRAMS	10^{3}	MILLIGRAMS
GRAMS	0.0352739	OUNCES
GRAMS	0.03215	OUNCES (TROY)

Conversion Tables

Given	Multiply By	To Find
GRAMS	2.205×10^{-3}	POUNDS
GRAMS	0.7716179	SCRUPLE
GRAMS (TROY)	2.0833×10^{-3}	OUNCES (TROY)
GRAMS/CM.	5.600×10^{-3}	POUNDS/INCH
GRAMS/CU. CM.	62.43	POUNDS/CUBIC FOOT
GRAMS/CU. CM.	0.03613	POUNDS/CUBIC INCH
GRAMS/LITER	58.417	GRAINS/GAL.
GRAMS/LITER	8.345	POUNDS/1000 GALS.
GRAMS/LITER	0.062427	POUNDS/CUBIC FOOT
GRAMS/LITER	1000	PARTS/MILLION
GROSS	12	DOZEN
HAND	4	INCH
HECTARE	2.471054	ACRE
HECTARE	107639.1	SQUARE FT.
HOGSHEAD	63	GALLONS
HORSEPOWER	42.4072	BTU/MIN.
HORSEPOWER	33000	FOOT – POUNDS/MIN.
HORSEPOWER	550	FOOT – POUNDS/SEC.
HORSEPOWER	1.014	HORSEPOWER (METRIC)
HORSEPOWER	10.7	KG. – CALORIES/MIN.
HORSEPOWER	0.7457	KILOWATTS
HORSEPOWER	745.7	WATTS
HORSEPOWER (BOILER)	33479	BTU/HOUR
HORSEPOWER (BOILER)	9.8095	KILOWATT
HORSEPOWER – HOURS	2547	BTU
HORSEPOWER – HOURS	1.98×10^{6}	FOOT – POUNDS
HORSEPOWER – HOURS	641.7	KILOGRAM – CALORIES
HORSEPOWER – HOURS	2.737×10^{5}	KILOGRAM – METERS
HORSEPOWER – HOURS	0.7457	KILOWATT – HOURS
INCH	1000	MILS
INCH	25.4	MILLIMETERS
INCHES OF MERCURY	0.03342	ATMOSPHERES
INCHES OF MERCURY	1.133	FEET OF WATER
INCHES OF MERCURY	345.3	KGS./SQUARE METER
INCHES OF MERCURY	70.73	LBS./SQUARE FT.
INCHES OF MERCURY	0.4912	LBS./SQUARE INCH
INCHES OF WATER	0.002458	ATMOSPHERES
INCHES OF WATER	0.07355	INCHES OF MERCURY
INCHES OF WATER	25.4	KGS./SQUARE METER
INCHES OF WATER	0.5781	OUNCES/SQUARE INCH
INCHES OF WATER	5.202	POUNDS/SQUARE FOOT
INCHES OF WATER	0.03613	POUNDS/SQUARE INCH
JOULE	0.000948	BTU
JOULE	0.238846	CALORIE
KILOGRAMS	980665	DYNES
KILOGRAMS	2.2046226	POUNDS
KILOGRAMS	1.102×10^{-3}	TONS (SHORT)
KILOGRAMS	10^{3}	GRAMS
KILOGRAMS – CALORIES	3.968	BTU
KILOGRAMS – CALORIES	3086	FOOT – POUNDS
KILOGRAMS – CALORIES	1.558×10^{-3}	HORSEPOWER – HOURS
KILOGRAMS – CALORIES	1.162×10^{-3}	KILOWATT – HOURS
KILOMETERS	10^{5}	CENTIMETERS
KILOMETERS	3280.84	FEET
KILOMETERS	10^{3}	METERS
KILOMETERS	0.6213712	MILES
KILOMETROS	1094	YARDS
KILOMETERS/HOUR	27.78	CENTIMETERS/SEC.
KILOMETERS/HOUR	54.68	FEET/MIN.
KILOMETERS/HOUR	0.9113	FEET/SEC.
KILOMETERS/HOUR	0.5396	KNOTS
KILOMETERS/HOUR	16.67	METERS/MIN.
KILOMETROS/HOUR	0.6214	MILES/HOUR
KILOWATT – HOURS	3415	BTU
KILOWATT – HOURS	2.655×106	FOOT – POUNDS
KILOWATT – HOURS	1.341	HORSEPOWER – HOURS
KILOWATT – HOURS	3.6×10^{6}	JOULE
KILOWATT – HOURS	860.5	KILOGRAM – CALORIES
KILOWATT – HOURS	3.671×10^{5}	KILOGRAM – METERS
KILOWATTS	56.869	BTU/MIN.
KILOWATTS	44253.7	FOOT – POUNDS/MIN.
KILOWATTS	737.6	FOOT – POUNDS/SEC.
KILOWATTS	1.34102	HORSEPOWER
KILOWATTS	14.3308	KG. – CALORIES/MIN.
KILOWATTS	10^{-3}	WATTS
KNOTS	1.150779	MILES (STATUTE)/HOUR
LEAGUE (STATUTE)	3	MILES (STATUTE)
LIGHT YEAR	5.8785×10^{12}	MILES
LINK	0.01	CHAIN
LINK	7.92	INCHES
LITERS	10^{3}	CUBIC CENTIMETERS
LITERS	0.03531	CUBIC FEET
LITERS	61.02	CUBIC INCHES
LITERS	10^{-3}	CUBIC METERS
LITERS	1.308×10^{-3}	CUBIC YARDS
LITERS	0.2642	GALLONS
LITERS	2.113	PINTS (LIQ.)

Given	Multiply By	To Find
LITERS	0.908	QUARTS (DRY)
LITERS	1.0567	QUARTS (LIQ.)
LITERS/MIN.	5.886×10^{-4}	CUBIC FT./SEC.
LITERS/MIN.	13.19815	GALLON (BRIT.)/HOUR
LITERS/MIN.	4.403×10^{-3}	GALLONS/SEC.
LITERS/SEC.	2.11888	CUBIC FT./MIN.
METERS	100	CENTIMETERS
METERS	3.2808399	FEET
METERS	39.37	INCHES
METERS	10^{-3}	KILOMETROS
METERS	10^{3}	MILLIMETERS
METERS	1.093613	YARDS
METERS/MIN.	1.667	CENTIMETERS/SEC.
METERS/MIN.	3.281	FEET/MIN.
METERS/MIN.	0.05468	FEET/SEC.
METERS/MIN.	0.06	KILOMETROS/HOUR
METERS/MIN.	0.03728	MILES/HOUR
METERS/SEC.	196.8	FEET/MIN.
METERS/SEC.	3.281	FEET/SEC.
METERS/SEC.	3.6	KILOMETER/HOUR
METERS/SEC.	0.06	KILOMETROS/MIN.
METERS/SEC.	2.236936	MILES/HOUR
METERS/SEC.	0.03728	MILES/MIN.
MIL	0.001	INCH
MIL	0.0254	MILLIMETER
MILES	320	ROD
MILES	1.609×10^{5}	CENTIMETERS
MILES	5280	FEET
MILES	1.609	KILOMETROS
MILES	1760	YARDS
MILES/HOUR	44.7	CENTIMETERS/SEC.
MILES/HOUR	88	FEET/MIN.
MILES/HOUR	1.467	FEET/SEC.
MILES/HOUR	1.609	KILOMETROS/HOUR
MILES/HOUR	0.8684	KNOTS
MILES/HOUR	26.82	Metros/MIN.
MILES/HOUR	1.609344	KILOMETROS/HOUR
MILES/HOUR	0.8689762	KNOTS
MILES/MIN.	2682	CENTIMETERS/SEC.
MILES/MIN.	88	FEET/SEC.
MILES/MIN.	1.609	KILOMETROS/MIN.
MILES/MIN.	60	MILES/HOUR
MILLIGRAMS	10^{-3}	GRAMS
MILLIGRAMS/LITER	1	PARTS/MILLION
MILLILITERS	0.0610237	CUBIC INCH
MILLILITERS	0.0338142	FLUID OUNCES
MILLILITERS	10^{-3}	LITERS
MILLIMETERS	0.1	CENTIMETERS
MILLIMETERS	0.03937	INCHES
MILLION GALS./DAY	1.54723	CUBIC FT./SEC.
MINER'S INCHES	1.5	CUBIC FT./MIN.
MINUTES (ANGLE)	2.909×10^{-4}	RADIANS
NEWTON – METER	0.737562	FOOT – POUNDS – FORCE
OUNCES	16	DRAMS
OUNCES	437.5	GRAINS
OUNCES	0.0625	POUNDS
OUNCES	28.349527	GRAMS
OUNCES	0.9115	OUNCES (TROY)
OUNCES	2.790×10^{-5}	TONS (LONG)
OUNCES	2.835×10^{-5}	TONS (METRIC)
OUNCES (FLUID)	1.805	CUBIC INCHES
OUNCES (FLUID)	0.02957	LITERS
OUNCES (FLUID)	30	MILLILITERS
OUNCES (FLUID)	1.040843	OUNCES (BRIT. FLUID)
OUNCES (TROY)	480	GRAINS
OUNCES (TROY)	20	PENNYWEIGHTS (TROY)
OUNCES (TROY)	0.08333	POUNDS (TROY)
OUNCES (TROY)	31.103481	GRAMS
OUNCES (TROY)	1.09714	OUNCES (AVOIR.)
OUNCES/SQUARE INCH	0.0625	POUNDS/SQUARE INCH
PACE	2.5	FEET
PALM	3	INCH
PARTS/MILLION	0.0584	GRAINS/U.S. GAL.
PARTS/MILLION	0.07016	GRAINS/IMP. GAL.
PARTS/MILLION	8.345	POUNDS/MILLION GAL.
PASCAL	0.0208854	POUNDS – FORCE/SQ. FT.
PECK (BRIT.)	2	GALLON (BRIT)
PECKS (US)	8	QUARTS (US DRY)
PENNYWEIGHTS (TROY)	24	GRAINS
PENNYWEIGHTS (TROY)	1.55517	GRAMS
PENNYWEIGHTS (TROY)	0.05	OUNCES (TROY)
PENNYWEIGHTS (TROY)	4.1667×10^{-3}	POUNDS (TROY)
PERCH (MASONRY)	24.75	CUBIC FEET
POINT (U.S.-PRINT)	0.013837	INCH
POLE (BRIT.)	16.5	FEET

Conversion Tables

Given	Multiply By	To Find
POTTLE (BRIT.)	.5	GALLONS
POUNDS	16	OUNCES
POUNDS	256	DRAMS
POUNDS	7000	GRAINS
POUNDS	0.0005	TONS (SHORT)
POUNDS	453.5924	GRAMS
POUNDS	1.21528	POUNDS (TROY)
POUNDS	14.5833	OUNCES (TROY)
POUNDS OF WATER	0.01602	CUBIC FEET
POUNDS OF WATER	27.68	CUBIC INCHES
POUNDS OF WATER	0.1198	GALLONS
POUNDS OF WATER/MIN.	2.670×10^{-4}	CUBIC FT./SEC.
POUNDS (TROY)	5760	GRAINS
POUNDS (TROY)	140	PENNYWEIGHTS (TROY)
POUNDS (TROY)	12	OUNCES (TROY)
POUNDS (TROY)	373.24177	GRAMS
POUNDS (TROY)	0.822857	POUNDS (AVOIR.)
POUNDS (TROY)	13.1657	OUNCES (AVOIR.)
POUNDS (TROY)	3.6735×10^{-4}	TONS (LONG)
POUNDS (TROY)	4.1143×10^{-4}	TONS (SHORT)
POUNDS (TROY)	4.1667×10^{-3}	TONS (METRIC)
POUNDS/CUBIC FOOT	0.01602	GRAMS/CUBIC CM.
POUNDS/CUBIC FOOT	16.02	KGS./CUBIC METERS
POUNDS/CUBIC FOOT	5.787×10^{-4}	POUNDS/CUBIC INCH
POUNDS/CUBIC INCH	27.68	GRAMS/CUBIC CM.
POUNDS/CUBIC INCH	2.768×10^{4}	KGS./CUBIC METER
POUNDS/CUBIC INCH	1728	POUNDS/CUBIC FOOT
POUNDS/FOOT	1.488	KGS./METER
POUNDS/INCH	178.6	GRAMS/CM.
POUNDS/SQUARE FOOT	0.01602	FEET OF WATER
POUNDS/SQUARE FOOT	4.883	KGS./SQUARE METER
POUNDS/SQUARE FOOT	6.945×10^{-3}	POUNDS/SQUARE INCH
POUNDS/SQUARE INCH	0.068046	ATMOSPHERES
POUNDS/SQUARE INCH	2.307	FEET OF WATER
POUNDS/SQUARE INCH	2.03602	INCHES OF MERCURY
POUNDS/SQUARE INCH	703.1	KGS./SQUARE METER
PSI	1	POUND – FORCE/SQ. IN.
PUNCHEON	84	GALLONS
PUNCHEON (BRIT.)	70	GALLON (BRIT.)
QUARTS (DRY)	0.03125	BUSHEL
QUARTS (DRY)	67.200625	CUBIC INCHES
QUARTS (DRY)	1.101	LITERS
QUARTS (LIQ)	57.75	CUBIC INCHES
QUARTS (LIQ)	0.9463	LITER
QUARTS (LIQ)	0.8326742	QUART (BRIT.)
QUARTS (LIQ)	0.859367	QUART (DRY)
QUINTAL, ARGENTINE	101.28	POUNDS
QUINTAL, BRAZIL	129.54	POUNDS
QUINTAL, CASTILE, PERU	101.43	POUNDS
QUINTAL, CHILE	101.41	POUNDS
QUINTAL, METRIC	220.46	POUNDS
QUINTAL, MEXICO	101.47	POUNDS
RADIANS	57.29578	DEGREES
RADIANS	3437.747	MINUTES
RADIANS	0.63662	QUADRANTS
RADIANS/SEC.	57.3	DEGREES/SEC.
RADIANS/SEC.	0.1592	REVOLUTIONS/SEC.
RADIANS/SEC.	9.549297	REVOLUTIONS/MIN.
REAMS	500	SHEETS
REVOLUTIONS	360	DEGREES
REVOLUTIONS	4	QUADRANTS
REVOLUTIONS	6.283	RADIANS
REVOLUTIONS/MIN.	6	DEGREES/SEC.
REVOLUTIONS/MIN.	0.1047	RADIANS/SEC.
REVOLUTIONS/MIN.	0.01667	REVOLUTIONS/SEC.
REVOLUTIONS/SEC.	360	DEGREES/SEC.
REVOLUTIONS/SEC.	6.283	RADIANS/SEC.
REVOLUTIONS/SEC.	60	REVOLUTIONS/MIN.
RODS	16.5	FEET
ROPE	20	FEET
SCRUPLE	20	GRAINS
SEAM (BRIT.)	64	GALLON (BRIT.)
SLUG	14.5939	KILOGRAMS
SPAN	9	INCHES
SQUARE CM.	10^{-4}	SQUARE METERS
SQUARE CM.	100	SQUARE MILLIMETERS
SQUARE FEET	2.296×10^{-5}	ACRES
SQUARE FEET	929	SQUARE CENTIMETERS
SQUARE FEET	144	SQUARE INCHES
SQUARE FEET	0.0929	SQUARE METERS
SQUARE FEET	3.587×10^{-3}	SQUARE MILES
SQUARE FEET	1/9	SQUARE YARDS
SQUARE INCHES	6.452	SQUARE CENTIMETERS
SQUARE INCHES	6.944×10^{-3}	SQUARE FEET
SQUARE INCHES	645.2	SQUARE MILLIMETERS
SQUARE KILOMETERS	247.1	ACRES
SQUARE KILOMETERS	10.76×10^{6}	SQUARE FEET

Given	Multiply By	To Find
SQUARE KILOMETERS	10^{6}	SQUARE METERS
SQUARE KILOMETERS	0.3861	SQUARE MILES
SQUARE KILOMETERS	1.196×10^{6}	SQUARE YARDS
SQUARE METERS	2.471×10^{-4}	ACRES
SQUARE METERS	10.76	SQUARE FEET
SQUARE METERS	3.861×10^{-7}	SQUARE MILES
SQUARE METERS	1.196	SQUARE YARDS
SQUARE MILES	640	ACRES
SQUARE MILES	27.88×10^{6}	SQUARE FEET
SQUARE MILES	2.59	SQUARE KILOMETERS
SQUARE MILES	3.098×10^{6}	SQUARE YARDS
SQUARE MILLIMETERS	0.01	SQUARE CENTIMETERS
SQUARE MILLIMETERS	1.550×10^{-3}	SQUARE INCHES
SQUARE YARDS	2.066×10^{-4}	ACRES
SQUARE YARDS	9	SQUARE FEET
SQUARE YARDS	0.8361	SQUARE METERS
SQUARE YARDS	3.228×10^{-7}	SQUARE MILES
STERE	1	CUBIC METER
STERE	0.2759	CORD
STONE	14	POUNDS
TABLESPOON	14.79	MILLILITERS
TEASPOON	5	MILLILITERS
TEMP.(°C.)+17.78	1.8	TEMP.(°F.)
TEMP.(°F)-32	.555	TEMP.(°C.)
THERM	100,000	BTU
TONS OF WATER/24 HRS.	83.333	POUNDS WATER/HOUR
TONS OF WATER/24 HRS.	0.16643	GALLONS/MIN.
TONS OF WATER/24 HRS.	1.3349	CUBIC FT./HOUR
TONS (LONG)	1016.0469	KILOGRAMS
TONS (LONG)	1.016047	TONS (METRIC)
TONS (LONG)	2240	POUNDS
TONS (LONG)	1.12	TONS (SHORT)
TONS (METRIC)	10^{3}	KILOGRAMS
TONS (METRIC)	2205	POUNDS
TONS (SHORT)	2000	POUNDS
TONS (SHORT)	32000	OUNCES
TONS (SHORT)	907.18486	KILOGRAMS
TONS (SHORT)	2430.56	POUNDS (TROY)
TONS (SHORT)	0.89287	TONS (LONG)
TONS (SHORT)	29166	OUNCES (TROY)
TONS (SHORT)	0.90718	TONS (METRIC)
WATT – HOUR	3600	JOULE
WATTS	0.05692	BTU/MIN.
WATTS	44.26	FOOT – POUNDS/MIN.
WATTS	0.7376	FOOT – POUNDS/SEC.
WATTS	1.341×10^{-3}	HORSEPOWER
WATTS	0.01434	KG. – CALORIES/MIN.
WATTS	10^{-3}	KILOWATTS
WATTS – HOURS	3.41214	BTU
WATTS – HOURS	2655	FOOT – POUNDS – FORCE
WATTS – HOURS	1.341×10^{-3}	HORSEPOWER – HOURS
WATTS – HOURS	3600	JOULES
WATTS – HOURS	0.8605	KILOGRAM – CALORIES
WATTS – HOURS	367.1	KILOGRAM – METROS
WATTS – HOURS	10^{-3}	KILOWATT – HOURS
YARDS	91.44	CENTIMETERS
YARDS	36	INCHES
YARDS	0.9144	METROS